X10 User Manual

100.00 mm

85.00 mm

Indicators

Unit status	Indicator
Bluetooth Pairing	Blue LED flashes
Bluetooth Pairing success/Pause status	Blue LED light on
Bluetooth Playing music	Blue LED flash slowly
Charging	Green LED flashes
Fully charged	Green LED goes off
TF Card Playback	Purple LED flashes
TF Card Pause status	Purple LED light on
AUX in Playback/ Pause	Red LED light on
TWS pairing status	Red LED flashes
TWS successful paired - main speaker	Blue LED flashes
TWS successful paired - second speaker	Red LED light on
TWS Playing music - main speaker	Blue LED flashes
second speaker	Red LED light on
TWS Pause music - main speaker	Blue LED light on
second speaker	Red LED light on
EQ - Flat	No LED
EQ - Rock	White LED light on
EQ - Jazz	Orange LED light on

Control buttons

Button	Operation	Operation details
⏻	Long press	Long press 0.5 seconds for Power On
	Long press	Long press 3 seconds for Power Off
▶II	Short press	1: Answer a call 2: End a call 3: Play/Pause the music - Bluetooth mode 4: Play/Pause the music - TF Card mode
	Long press	Long press 2 second to go to pairing mode
	Double press	Double press to redial the last call
−	Short press	Volume -
	Long press	Previous song
+	Short press	Volume +
	Long press	Next song

Control buttons

Button	Operation	Operation details
M	Short press	Short press to change function mode: Bluetooth/ TF CARD/ AUX IN (when pluged in TF Card/ AUX in cable)
	Long press	Long press 2 seconds to start TWS or disconnect TWS mode
	Double press	Access Voice Assistance
EQ	Short press	Short press to change EQ mode: FLAT > ROCK > JAZZ

Auto shut off
The speaker will be turned off if no device has been paired or has not been play music for more than 30 minutes.

Reset to factory default
In Bluetooth mode, press and hold the "EQ" and "M" button together for 3 seconds until heard "dondondon". The unit will return to Bluetooth function (default) when the reset is completed.

Specifications

Bluetooth section:
- Bluetooth version: 5.3
- Bluetooth Audio Decoding: AAC, SBC
- Support profile: A2DP, AVRCP, HFP, HSP
- Frequency range: 2.402-2.480 GHz (2.4 GHz ISM Segment)
- Service distance: up to 10m

General:
- Frequency response: 80hz-18kHZ
- Power output: 2 x12.5W RMS
- Battery: Li-ion 7.4V 2500mah
- Charge time: around 4 hours
- Charging input: TYPE-C 5V / 1A
- Operation time: up to 12hours (50% volume level)
- Unit size: 207(D) x 70(D) x 82(H) mm
- Unit weight: 785g
- Accessories: Type-C Charging cable x 1
  3.5mm AUX IN cable x 1
  User manual x 1

X10

Portable Wireless Speaker

USER MANUAL

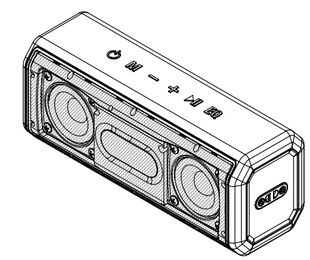

IPX7 Water Proof

Super Bass 25W Output Power

WARNING
• Stop using the device immediately in case of an abnormality or failure.
• Remove the USB cable immediately when water or any foreign object enters the interior of the device. It may cause a fire or electric shock. Remove the USB cable immediately, and contact your dealer for a repair.

To reduce the risk of fire, electric shock or product damage,
• Do not disassemble, repair, or modify the unit . Refer servicing to qualified service personnel.
• Do not step on, throw, or drop battery or the power supply or unit, or expose them to a strong shock.
• Do not throw the unit into fire. The battery could explode causing injury or death.
• Do not install this unit in a confined or built-in space such as a book case or similar unit, and keep a well-ventilated conditions. The ventilation should not be impeded by covering the ventilation openings with items such as newspaper, table-cloths, curtains etc.
• Do not expose this unit to rain, moisture, dripping or splashing.
• Do not place objects filled with liquids, such as vases, on this unit.
CAUTION
To reduce the risk of fire, electric shock or product damage,
• Do not attempt to replace the battery by yourself, it is built-in and is not changeable.
• Do not heat, disassemble, or short-circuit the battery. Doing so may cause the battery and power supply to generate heat, rupture, or ignite.
• Charge the battery only in an ambient temperature between 5 and 35 degrees Celsius. Otherwise, the electrolyte solution might leak, battery performance might deteriorate and the battery life might be shortened.
• Do not continue charging the battery if it does not reach full charge within the specified charging time. Overcharging may cause the battery to become hot, rupture, or ignite.
• Do not expose the battery to excessive heat such as under the sun or near the fire or the like.
Overheat, leakage, or rupture may occur, resulting in burns or injury.
If you touch the battery fluid, rinse it off with water and consult with the doctor. If the battery fluid spills over the device, wipe it off without touching the fluid.

Controls and Indicators

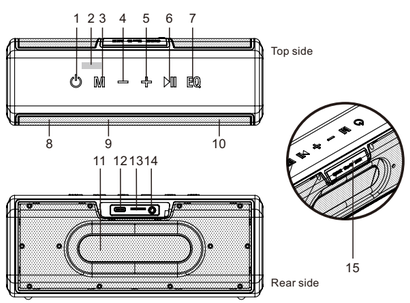

Controls and Indicators

1. POWER ON/OFF button
2. LED INDICATORS
3. MODE/TWS button
4. SKIP BACKWARD/VOLUME "-" button
5. SKIP FORWARD/ VOLUME "+" button
6. PLAY/ PAUSE/ PAIRING button
7. EQ button
8. LEFT SPEAKER driver
9. MICROPHONE
10. RIGHT SPEAKER driver
11. PASSIVE RADIATOR
12. TYPE-C Charging port
13. TF CARD slot
14. 3.5mm AUX IN sorcket
15. WATER PROOF cover

Turning on/off the power

Powering on:
Press and hold the Power button for 0.5 second to power ON the unit, the Blue indicator will flash or light up. The Blue indicator flashes for Bluetooth pairing.
Powering off:
Press and hold the Power button for 3 seconds to power OFF.

Bluetooth connection
- Press and hold the Power button 0.5 second to power ON.
Bluetooth function will go into pairing mode and the blue indicator will keep flashing.
- Following the instructions in your device's user manual, activate Bluetooth on your device and search for other devices.
Once you have found "X10", pair with the speaker. The function indicator lights up when the devices have been paired correctly.

Playing Bluetooth Music:
Once your device and the speaker are paired, you can play music on this speaker through Bluetooth.
1. Press the PLAY/PAUSE button either on your device or this speaker to Play or Pause music.
2. Adjust the volume level either on your device or this speaker by pressing the "+" or "-" button.
Notes
• Press and hold the "+" button 2 seconds to play the next track.
• Press and hold the "-" button 2 seconds to play the previous track.

Pairing for the second time or later
This speaker will automatic pair with the last connected device when that device is in range.

Disconnecting the Bluetooth device currently connected and connecting another Bluetooth device
Press and hold the PLAY/PAUSE button 2 seconds to disconnect the currently connected Bluetooth device. The speaker is in the pairing waiting mode at the time. To connect with another device, follow Step 2 of the "Bluetooth connection" procedure.

TWS Function

If you have two X10 units, the dual pairing function allows you to connect two speakers to one device. As soon as you start playing music on your device, the two paired speakers play the left and right audio channels, so you can enjoy stereo music.

1. Turn on two speakers and make sure there is no Bluetooth connection with a device.
2. When the speakers enter Bluetooth mode, press and hold the "M" button on any of the speaker to start the TWS connection. The RED indicators flashes.
3. When the two speakers are successfully paired with each other, the Blue indicator of the main speaker will blink, while the red indicator on the other speaker will light on.
4. Go to the BT settings on your Bluetooth device to search and select "X10". The Blue indicator lights up when the devices have been paired correctly.

Playing TF Card Music

1. When the TF Card is inserted to the TF card slot, this speaker will switch to TF card function and plays music automatically. The Purple indicator flashed while playing and keep light on while Pause playing. Press the Play/Pause button to Pause and Play music.
2. Press the "+" / "-" buttons to adjust the volume level.
3. Press and hold the "+" / "-" buttons to play next/previous track.
Note: You can switch to BT mode by short press the "M" button.

Playing AUX in music
1. When the AUX cable is connected to the AUX in socket, this speaker will switch to AUX function. The function indicator lights up in Red.
2. Press the Volume +/Volume - buttons on this speaker or audio device to adjust the volume level.

Speakerphone with a Bluetooth Mobile phone

Before the speakerphone feature of this speaker can be used, you will need to pair and connect your Bluetooth-enabled phone with this speaker.
Please refer to "Bluetooth connection".
Answer a call:
1. To answer a call, short press the PLAY/PAUSE button. You can then use this speaker as a speaker phone.
2. Speak into the built-in microphone of the speaker and use the "+" / "-" buttons on this speaker to adjust the call volume.
3. To end the call, short press the PLAY/PAUSE button.
4. To redial the last call, double press the PLAY/ PAUSE button.
Note
• To reject a call, press and hold PLAY/PAUSE button for 2 seconds.
• The speakerphone feature of this speaker can be used only in the bluetooth function.

Voice Control with a Bluetooth Mobile Phone

You can use your mobile phone's Voice Control function with this speaker.
1. Connect your Bluetooth-enabled mobile phone with this speaker.
Turn on your mobile phone's Voice Vontrol function.
2. Double press the "M" button of this speaker to access the voice control on your mobile phone. Your mobile device's Voice Control starts. Speak out loud and describe what you want your Smartphone to do or what you want it to search for.

Charging the unit

We recommend fully charging the X10 before its first use:
1. Remove the water proof cover.
2. Connect the supplied USB-C cable to the Type-C charging port and connecting to an universal USB charger.
3. The Charge indicator flashes Green while the battery is charging. Once fully charged, the charge indicator will be solid Green.
Note:
When the battery voltage is too low, "Battery Low" is heard and the Charge LED will flash Green. Please charge the unit.

FCC Statement

This equipment has been tested and found to comply with the limits for a Class B digital device, pursuant to part 15 of the FCC Rules. These limits are designed to provide reasonable protection against harmful interference in a residential installation. This equipment generates, uses and can radiate radio frequency energy and, if not installed and used in accordance with the instructions, may cause harmful interference to radio communications. However, there is no guarantee that interference will not occur in a particular installation. If this equipment does cause harmful interference to radio or television reception, which can be determined by turning the equipment off and on, the user is encouraged to try to correct the interference by one or more of the following measures:

- Reorient or relocate the receiving antenna.
- Increase the separation between the equipment and receiver.
- Connect the equipment into an outlet on a circuit different from that to which the receiver is connected.
- Consult the dealer or an experienced radio/TV technician for help.

Caution: Any changes or modifications to this device not explicitly approved by manufacturer could void your authority to operate this equipment.

This device complies with part 15 of the FCC Rules. Operation is subject to the following two conditions: (1) This device may not cause harmful interference, and (2) this device must accept any interference received, including interference that may cause undesired operation.

RF Exposure Information

The device has been evaluated to meet general RF exposure requirement. The device can be used in portable exposure condition without restriction.