Moveway

MOWEI E-SCOOTER MV01 USER MANUAL

Shenzhen Mowei Travel Technology Co., Ltd.

Please read the user manual carefully before riding

All pictures in this manual are reference only, please refer to actual product.
Thank you for choosing MOVEWAY Electric Scooter MV01 (hereinafter referred to as scooter)
This scooter is easy to fold and easy to Carry, it′ s a sports entertainment
equipment with stylish technology

1 Stafety Instructions ---------- 1
2 Packing List ---------- 4
3 Production Function Diagram ---------- 5
4 How To Assemble ---------- 7
5 Potential Safety Hazards ---------- 8
6 Daily Care And Maintenance ---------- 9
7 Specification ---------- 11
8 Safety Instructions ---------- 13

1 Safety Instructions

1. The electric scooter MV01 is a product designed for personal urban transportation, which have the property of a means of transportation, and the safety risks which all means of transportation may have.

2.Follow the tips and warnings in this manual can reduce risks, but it cannot eliminate all risks. Please keep in mind that when you use a scooter, you may be at risk of injury or death due to loss of control, collision, and falls. The scooter is only suitable for the hard pavement above, it is recommended to use it in alternately closed pavement environment (such as inside the community, parks, special venues, etc.) Do not pass through places with obstacles and contacts. When entering an unfamiliar environment, be vigilant and slow down.

3.Please wear a helmet and protective gear when riding. Please use an approved bicycle or scooter helmet..

4. For the first riding, please do not choose areas where children, pedestrians, pets, vehicles, bicycles or other obstacles and potential hazards may appear.

5.Please respect the right of pedestrians when riding.Avoid frightening pedestrians, especially the elderly, children, the disabled and pregnant women. When approaching pedestrians from the rear, remind pedestrians and slow down when passing. Please abide by local trafic laws and regulations.

6.When riding in countries and regions where there are no laws and regulations related to electric scooters, you must strictly abide by the safety requirements for cyclists in this manual. Inmotion will not assume any responsibility for any property loss,personal injury /injury, accident or legal disputes caused by the use behavior that violates the safety tips in this manual.

7. Before lending your scooter to someone else, make sure that they have read this manual, watched the instructional video, and learned novice instruction. You are responsible for ensuring the safety of new riders. Please assist him /her to learn to use this product until he / she learns the basic operation of this scooter. Please ensure that each new rider wears a helmet and other protective gear.

8. Before ride it, please check and make sure no loose fasteners and damaged parts. If the scooter makes abnormal noise or alarm sound, please stop using it immediately and consult with your purchasing point or email to manufacturer.

9.Please observe the road surface when riding,avoid obstacles and smooth ground (including but not limited to wet ground, loose sand, stone ground and ice surface).

10.In order to reduce the risk of injury, you must read and follow all "Caution"and "Warning" notices in this manual. This product is suitable for users aged 14-60 years old and weighing less than 140kg. Please comply with the following safety tips:

A.Those who are not suitable for riding this scooterinclude:

i.Persons affected by alcohol or drugs.

ii. Persons unable to engage in vigorous physical activities due to illness.

iii. Unable to maintain balance.

iv.Persons whose weight exceeds the prescribed limit (please refer to the instruction manual"Model Parameter Table").

v.Pregnant woman.

B. Minors need to ride scooters under adult supervision.

C. Please abide by the local laws and regulations while riding. Do not ride scooters in areas prohibited by the local law.

D. For a safe ride, you must ensure that you can see the area in front, and you could be seen by others.

E.Whatever the reason, please do not ride the scooter when it is snowing, raining, slippery, muddy or icy. Do not ride a scooter across obstacles (sand, stones or roadblocks), which may cause a loss of balance or grip, and result in a fall.

F.Damages and losses due to water ingress are not covered by the warranty.

G. Please do not drive at night.

H.Please do not suddenly accelerate or decelerate. Please do not drive at a speed exceeding the limit of the scooter, otherwise there may be a risk of runaway, collision and falling.

11.Please do not try to charge your scooter when the charging port, charger or power outlet is wet.

12. Make sure using the original chargers from Moveway to charge the scooter.

13.Only use parts and accessories approved by Moveway. And do not modify your scooter. Modifications to the scooter may affect the operation of the scooter, resulting in serious injury / damage and invalid warranty.

14.Children should not use scooters or play scooter parts. When riding, the car body vibration will cause the driver's body vibration.

15. It is recommended to park on a flat and solid ground. If parking on a slope, the kick stand must face downhill to prevent overturning. Do not allow the scooter head to rush down to prevent the kick stand support from closing under gravity and the vehicle toppling over.After put down the kick-stand, please check whether the scooter body is stable and prevent the scooter (from sliding, wind or shaking) from tipping over. Do not park in busy areas. It is recommended to park near the wall. Please park the scooter on a flat road as much as possible.

16.In order to get a better driving experience, it is recommended to maintain the product regularly.

17.Please read the user manual before charging.

18.Do not touch the brake parts of scooter, injury may cause.

2 Packing List

MV01 Scooter x1
Charger x1
Power cable X1
Manual X1
Screws X6
Hex wrench X1

3 Product Function Diagram

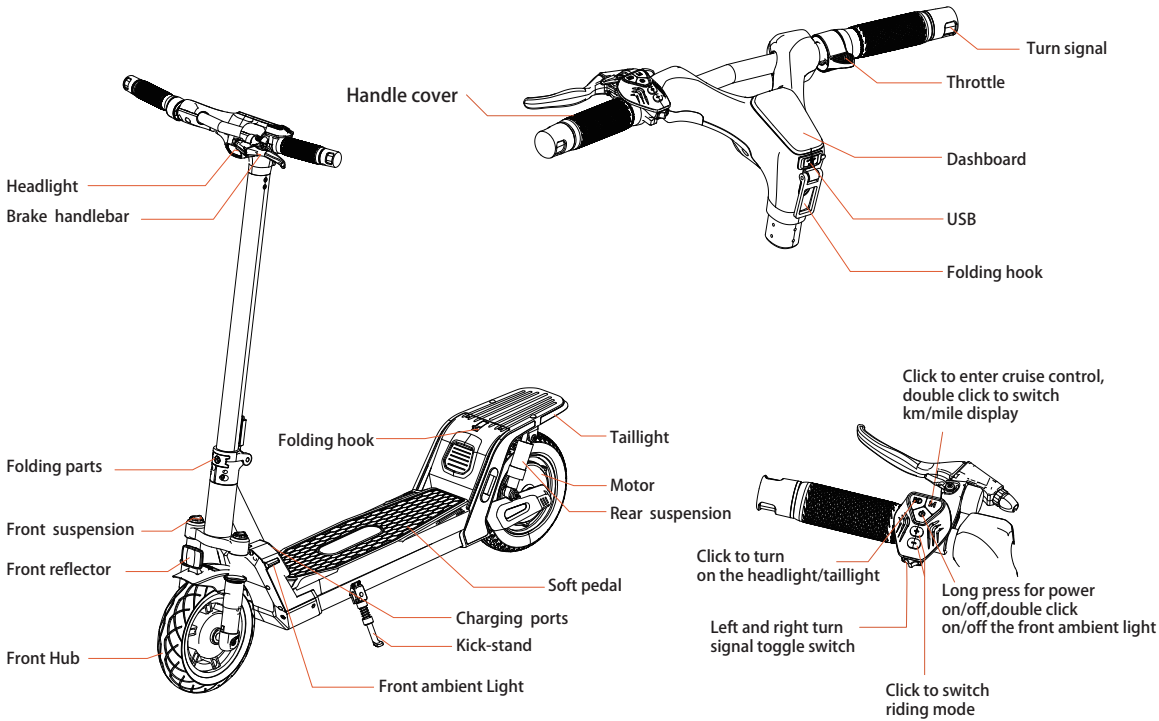

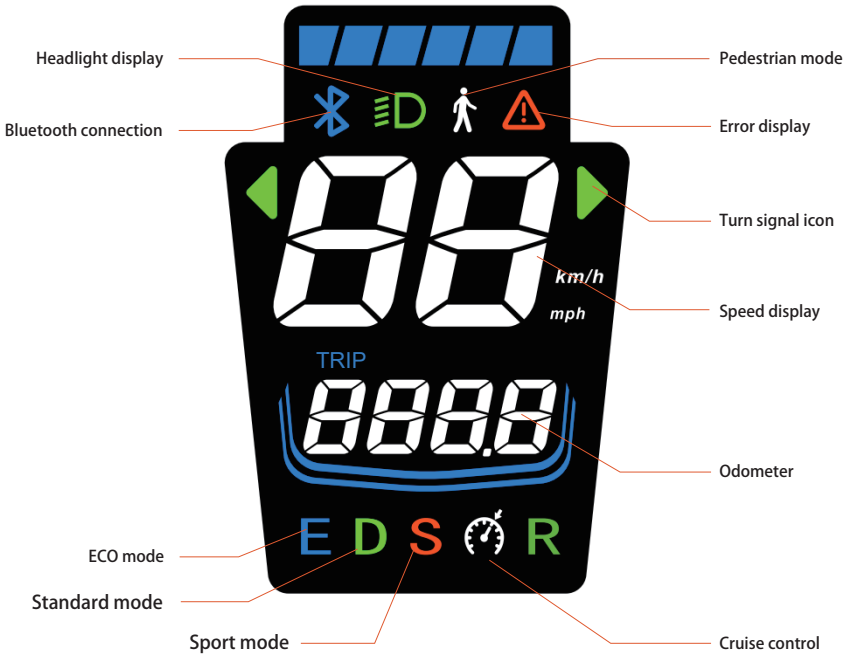
Headlight display
Bluetooth connection
Pedestrian mode
Error display
Turn signal icon
km/h
mph
Speed display
TRIP
Odometer
E D S R
ECO mode
Standard mode
Sport mode
Cruise control

4 How To Assemble

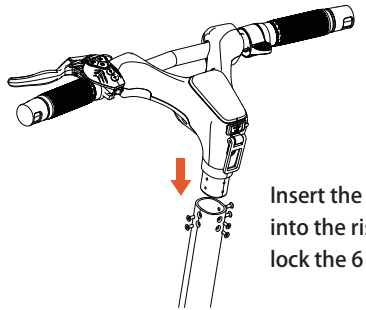

Insert the front
into the riser and
lock the 6 screws

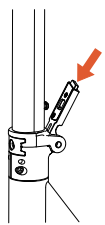

Press the head button
to open the folder

5 Potential Safety Hazards

⚠ Failure to follow these instructions may result in serious injury.

Avoid riding in the rain.

Do not ride at a high speed when pass by the bumps and potholes, it's a good recommendation to keep slow to medium speed on rough road. (5- 10km/h).

Do not press the throttle when pushing the scooter.

Pay attention to road conditions and avoid obstacles while riding.

Avoid hitting high obstacles such as door frames and elevators.

Do not step on the rear fender.

Do not hang heavy objects on handlebars and other parts of scooter.

Do not ride at the Non-standard postures, such as: riding on with one foot on footrest or one hand on handlebar.

Do not ride it in public road, motorway, highway, etc.

Do not turn the handle greatly on high-speed riding.

Do not touch, if the motor causes high temperature and heat during operation.

Do not hands free from handlebars while riding.

Don't go straight through the puddle, please go around t with a low speed.

For one rider only, do not ride with other person or holding the child. Not suitable for pregnant women.

Do not ride scooters up and down steps orjump obstacles.

Do not using cell phone or headphone on riding.

6 Daily Care And Maintenance

Cleaning and storage

Wipe the main frame of escooter with a soft damp cloth. If any stains which is difficult to clean, brush repeatedly with a toothbrush and toothpaste, then clean with a soft damp cloth .

Tips

Do not use alcohol, gasoline, kerosene, or other corrosive, volatile solvents to clean your scooter. These substances may damage the appearance and internal structure of the body of scooter. It is forbidden to spray the scooter with pressure water-gun or water pipe.

Warning

Before cleaning, make sure the scooter is powered off, and the charging cable has been unplugged and the rubber cover of the charging port has been fastened. Otherwise it may cause damage to electronic components or the battery. When scooter is not in use, please place it in a bright and dry place. Do not park the scooter outdoors. Sun exposure or extreme temperature conditions (overheating and too cold) will accelerate the aging of plastic parts and may lead to a reduction in battery life.

Battery dis-assembly and maintenance

1. Do not use battery made by 3rd parties if without authorization, otherwise there may be safety risks.
2. Recharge the scooter with original charger, otherwise there may be a risk of damage orfire.
3.Do not touch the battery contacts, and do not dis-assemble or pierce the case of battery. Avoid the short circuit caused by metal objects touching the battery contacts, otherwise it may cause battery damage or personal injury.

4. It is forbidden to put the battery into fire, otherwise it may cause the battery to fail,overheat, or even risk of fire.
5.Please fully charge the scooter before store it, which is helpful to prolong the battery life. Do not exceed the limit of specified temperature (refer to the table of parameter) while store and charge the battery.
6.The Improper disposal to used batteries may seriously pollute the environment. Please comply with the local regulations when dispose ofthe battery. Do not discard this battery as one's desire.
The battery in good condition can maintain a good operating state even after driving for many miles. Please re-charge the battery on time, to avoid the battery is completely draining. At the indoor temperature 22° C, the battery has the best battery life and performance. However, at the temperatures under 0° C, the battery life and performance may degrade.

Reminding

A fully charged battery will exhaust its stored charge after about 120-180 days of standby. In standby mode, low-charge batteries should be charged every 30-60 days. Charge the battery after each ride. A completely drained battery may cause permanent damage to the battery. A smart chip inside the battery records the charge and discharge of the battery. Damage due to overcharging or undercharging is not covered by the warranty.

Warning

Please do not try to dis-assemble the battery, otherwise there is a risk of fire. Users is not allowed to repair the parts contained in this scooter by themselves, if without authorization.

Warning

Do not ride this scooter when the ambient temperature exceeds the product operating temperature (please refer to parameter table). The extra power lost would caused bythe low / high temperature, meanwhile, slipping or falling may occur,resulting in personal injury or property damage.

7 Specification

	Specification	MV01
Dimension of product	Unfold:L*W*H	1153*575*1252mm
	Fold: L*W*H	1153*575*550mm
	Pedal size：L*W	541*157mm
Weight	Net weight	25kg
Recommendation	Max. of payload	140kg
	For age at	14-60 years old
	For height at	130-200cm
Performance	Max speed	35km/h
	Mileage[1]	~100km
	Max slope	~30%
	Working temperature	− 10—40℃
	Storage temperature	− 20—50℃
	IP rating	IP54
Battery	Charging time	~8h，dual charge~ 4.5h
	Rating voltage	46.8V
	Max voltage	54.6V
	Charging temperatur	0—40℃
	Capacity	716Wh
	BMS	Overheat / short circuit /overcurrent/ overcharge protection
	Battery protection level	Battery IP67

Motor	Rating power(W)	500W
	Max powe(W)	1000W
Others	USB Charge	5V 2.5A
	Turn light	Handle turn signal, tail turn signal
	Brake light	LED taillight
	Mode switch	Energy saving mode, standard mode and sport mode
Charger	Input voltage	AC100-240V 50/60HZ
	Output voltage	DC54.6V
	Output current	1.5A
Tyre	Front/Rear	10″ Pneumatic tire,tubeless

①Theoretical mileage reference data

Weight	60KG	75KG	90KG
Speed	20KM/H	25KM/H	25KM/H
Mileage	100KM	78KM	65KM

Test environment: riding at a constant speed on a flat road, without using brakes, and the ambient temperature is 28.

8 Safety Instructions

1.Read this user manual carefully before riding, do not attempt to ride a scooter if you cannot fully follow the Electric Scooter MV01 Instruction Manual.

2.Do not allow other people to ride this scooter before they read this manual carefully.

3.Please purchase insurance in time after purchasing the product, in order to minimize the risk of use.

4.You are obliged to know all relevant laws, regulations and policies regarding riding scooters in your area, and strictly comply with applicable laws, regulations and policies.

5.Please wear a helmet with appropriate size when riding.

6.This scooter may contain detachable parts, which should avoid the harm caused by children swallowing.

7.Scooters is similar like other sports equipment, you must be very careful on riding. You must make sure you' re able to ride a scooter freely without any assistance, before riding. It is forbidden to ride fatigue, take drugs or drink. It is recommended that you do not ride a scooter during illness, pregnancy or when you have any bad emotions, chase. No racing and overload.

8. If some damage, emits odor, smoke, overheating or performance failure or abnormality parts on the scooter, please do not continue to use the scooter and contact with after-sales service in time.

9. When any smoke emitted out from the inside of scooter (even the probability is only l in 1 million), please immediately put the scooter into an empty unmanned area, or try to cool down it. Please pay attention to avoid damaging other property or causing any personal injury.

10.Scooter is not medical devices and it's not recommended to be used as medical aids.

11. Do not throw or drop the scooter. Do not place the scooter in an open flame or high temperature.

12.The scooter move spontaneously may caused by parking without turning off, which may bring damage to others or property around it.

13.The unauthorized modification may endanger your safety on riding, Do not modify the scooter in any form without permission.

The Requirement Of Environment For Riding:

1. Do not ride on inclined roads, uneven ground, slopes greater than 10%, area near swimming pools and other place with slippery, stagnant water, evacuated materials, etc. which may affect normal riding or not safe. Do not ride in areas where is not permitted to ride by the local laws, regulations or policies.
2.For your safety,please do not take risks to ride through those terrain you have not encountered before, such as steep slopes, inclined roads.
3.Do not ride in these following situations: bad weather, low visibility, at dawn, dusk, thick fog, thick smoke, night or darkness,or extreme fatigue, each of these conditions above would increases the risk of accidents.
4. Do not ride a scooter in rain or snow. After riding, please park the scooter indoors to avoid damage to the scooter due to water ingress caused by rain and snow.Be careful, the resistance of wheels on wet roads is relatively reduced, which will be more difficult for the rider to control the speed.

The Requirement To Rider:

1. The rider must be more than 14 years old and with weight no more than 140 kg. As a parent or guardian, you are responsible for the activities and safety of your minor children. Parents or guardian should accompany with the minor children throughout the riding journey to avoid danger.
2. It’s not recommened to ride the scooter to persons with difficulties in sight, hearing, body, language, and movement.Anyone with serious heart, high blood pressure, dizziness and other diseases that are not suitable for sports is strongly recommended not to ride the scooter. No riding on this scooter after taking drugs and alcohol.

Preparison Before Riding:

1. Please read this manual carefully. All the components of the scooter must be correctly installed according to the instructions, meanwhile, make sure the installation is not too loose or too tight, to avoid damage or failure.
2. Before riding, please check the installation status, wheel performance and battery status according to the instruction in manual. Mark sure the scooter is a proper status, no signs of loosening or damage on any parts. If any signs of abnormality, please stop riding it immediately and contact the after-sales for checking and guidance.
3.The scooter does not have enough power to maintain your normal riding while the power display is low and empty. Make sure the power is sufficient before riding, in order to avoid any danger.
4. To ride a scooter, you must wear a helmet. And the knee pads, gloves, wrist guards, elbow pads, and sports shoes are recommended.
5. No high heels, slippers and open-toed shoes when riding a scooter.
6. It is recommended to wear protective glasses on riding, to protect your eyes from dirt, dust and insects in the air.

Notes On Riding:

1.Please comply with the local laws, regulations and policies on riding.
2.Start smoothly on a flat road, and do not accelerate or brake sharply on riding, And hold the handle with both hands always.
3. Please be vigilant on riding and always maintain good judgment. Keep a suitable speed and safe distance with other vehicles. Please slow down when driving into a unfamiliar environment.
4. In order to avoid distraction on riding, do not wear headphones, earplugs, make phone calls, take pictures, take pictures.

5.Be defensive on riding. Pay attention to yourself, vehicles and pedestrians.

6.Make sure you are visible on riding to others.

7. One rider only. Do not ride with others on one scooter, including children and pregnant women.

Battery Maintenance And Storage

1. Please use the original battery. Do not use battery from unauthorized suppliers, otherwise there may be safety risks.

2. Please use the original charger, otherwise the battery may be damaged orin danger offire.

3.There are harmful substances in the battery, please do not try to damage or disassemble the battery.

4. If the battery is damaged or gets into water, do not recharge it or continue to use this battery.

5. Do not plug in the charger when the charging port or charging cable is wet.

6.It is strictly forbidden to disassemble, squeeze or puncture the product, forbid touching the battery contacts, disassembling or piercing the casing. Do not put this product into water or fire (including close to the furnace and other heat sources). Avoid short circuit caused by metal objects touching the battery contacts, otherwise it may cause battery damage or personal injury.

7. It is strictly forbidden to immerse the battery and scooter in water or ride in the rain. And do not clear the scootery by the strong water flow and high-pressure hoses. If your scooter has been exposed to heavy rain or has been riding for a long time in the rain, please wipe the scooter with a dry soft cloth in time, stop using it immediately, and consult with the service staff.

8.Do not place the scooter in the environment over 45 ℃ or below-20 ℃(for example, do not put the scooter or battery in a car exposed under the sunshine in summer). Before charging, if the battery was storaged under the

environment temperature lower than 0 ℃, please put the scooter in a warm environment (more than 10 ℃) for a while until the battery reaches the charging temperature requirement (0-40 ℃).

9.Warning: Due to the improper use above, the performance of battery is attenuated or can not be used normally, which is not covered by the scope of warranty.

10.The environment may be polluted by the Improper disposal of used batteries. Please comply with the local laws and regulations when discard of the battery.

FCC STATEMENT :

This device complies with Part 15 of the FCC Rules. Operation is subject to the following two conditions:

(1) This device may not cause harmful interference, and

(2) This device must accept any interference received, including interference that may cause undesired operation.

Warning:

Changes or modifications not expressly approved by the party responsible for compliance could void the user's authority to operate the equipment.

NOTE:

This equipment has been tested and found to comply with the limits for a Class B digital device, pursuant to Part 15 of the FCC Rules. These limits are designed to provide reasonable protection against harmful interference in a residential installation. This equipment generates uses and can radiate radio frequency energy and, if not installed and used in accordance with the instructions, may cause harmful interference to radio communications. However, there is no guarantee that interference will not occur in a particular installation. If this equipment does cause harmful interference to radio or television reception, which can be determined by turning the equipment off and on, the user is encouraged to try to correct the interference by one or more of the following

measures:

Reorient or relocate the receiving antenna.

Increase the separation between the equipment and receiver.

Connect the equipment into an outlet on a circuit different from that to which the receiver is connected.

Consult the dealer or an experienced radio/TV technician for help.

FCC STATEMENT :

The device has been evaluated to meet general RF exposure requirement. The device can be used in portable exposure condition without restriction.