Underwater Scooter
Instruction Manual

Preface

Thank you for purchasing our products - Underwater Scooter

This is a high-tech underwater scooter that provides power propulsion for freedivers and professional divers. Easier to carry and use due to its compact and lightweight design, with 3-speed settings to suit your needs. The modular design provides you with diversification of use and a safer experience for you.
Have fun!

Table of contents

1. General Information ---------- 1

1.1. What's in the box ---------- 2

1.2. Safety warnings ---------- 3

2. Features ---------- 7

2.1. Product image ---------- 7

2.2. Handle device ---------- 9

3. Assembly ---------- 11

3.1. Handle assembly ---------- 11

3.2. Fix the handle bracket to the main unit ---------- 12

3.3. Install and remove the battery ---------- 14

4. Charging Instructions ---------- 15

4.1. How to charge the battery ---------- 15

4.2. How to charge the handle (remote controller) ---------- 16

5. How to use 17
5.1. How to pair the main unit and remote controller 17
5.2. How to use the handheld scooter after pairing 18
5.3. How to use the SUP scooter 19
5.3.1. SUP scooter assembly 19
5.3.2. How to pair the main unit and SUP remote controller 21
5.3.3. How to use the SUP scooter after pairing 22
5.4. How to turn on and off the light 23
6. Maintenance 24
6.1. Clean issues 25
6.2. Storage 26
6.3. Disposal 26
7. Product Specification 27
8. Warranty Service 29

1、General information

Please read all instructions carefully before using the underwater scooter. This manual will guide you through the function, use and proper maintenance of the scooter. If you have any questions or cannot find the information you need in the manual, please feel free to contact us. Before contacting customer service, please prepare your purchase information as it may be needed during the service process.

When reading this manual, please note these icons:

Precautions with this icon must be read, understood and followed to prevent injury or damage, etc.

Notes with this icon contain related information.

1.1 What's in the box

1. Underwater scooter main unit x1
2. Handle bracket x1
3. Battery x1
4. Battery charger x1
5. Charging cable x1
6. Anti-lost rope x1
7. User manual x1
8. SUP model accessories includes:
   SUP anti-lost rope
   SUP clip
   SUP remote controller

1. 2. Safety Warnings

The underwater scooter is designed with the utmost safety in mind for its users. However, as with any scooter product, it has inherent hazards associated with its use (for example: losing control).

Therefore, it is important to read and follow all instructions and warnings in the manual and use good judgment when using the scooter.

By using this underwater scooter, the user acknowledges and accepts responsibility of all risks associated with the use of it, which may include, but are not limited to, muscle injuries, broken bones, lacerations or other serious injuries.

Use the underwater scooter at your own risk. We are not responsible for mishaps due to lack of common sense.To be better ensure your safety, ALWAYS USE APPROPRIATE PROTECTIVE GEAR, read and follow all instructions.

Caution: The user is cautioned that changes or modifications not expressly approved by the party responsible for compliance could void the user's authority to operate the equipment.

This device complies with Part 15 of the FCC Rules. Operation is subject to the following two conditions: (1) this device may not cause harmful interference, and (2) this device must accept any interference received, including interference that may cause undesired operation.

NOTE: This equipment has been tested and found to comply with the limits for a Class B digital device, pursuant to Part 15 of the FCC Rules. These limits are designed to provide reasonable protection against harmful interference in a residential installation. This equipment generates, uses and can radiate radio frequency energy and, if not installed and used in accordance with the instructions, may cause harmful interference to radio communications. However, there is no guarantee that interference will not occur in a particular installation.
If this equipment does cause harmful interference to radio or television reception, which can be determined by turning the equipment off and on, the user is encouraged to try to correct the interference by one or more of the following measures:
-- Reorient or relocate the receiving antenna.
-- Increase the separation between the equipment and receiver.
-- Connect the equipment into an outlet on a circuit different from that to which the receiver is connected.
-- Consult the dealer or an experienced radio/TV technician for help.

FCC Radiation Exposure Statement
This equipment complies with FCC radiation exposure limits set forth for an uncontrolled environment.
This transmitter must not be co-located or operating in conjunction with any other antenna or transmitter.

- This product is critical diving equipment and should not be used as a lifesaving device.
- Please do not operate this underwater scooter in the air for a long time, otherwise it may burn out due to overheating.
- Any accessories of this product shall not be near the fire source, and shall not be subjected to heavy pressure.
- The operating temperature for this product is 32°F - 104°F and the storage temperature for any accessories with this product is 14°F - 122°F.
- The surface of the product must not be in contact with volatile, acidic, corrosive substances or sharp objects.
- Do not place any part of your body or foreign objects near the propeller while the product has batteries installed.
- After-sales service and repairs can only be carried out by authorized centers. Unauthorized repairs will void the warranty and present a risk to personal safety and impairment of product functionality.
- Minors under the age of 14 are not allowed to use this product, and minors over the age of 14 should use this product under the supervision of their guardians.
- Do not use this product if you are not fit for swimming, snorkeling or diving. Do not use this product under the influence of alcohol or drugs.
- Before using this product, please make sure that the water is suitable for swimming, diving, etc., and it is allowed to use this product.
- Before using this product, please check that the surface of the product is not damaged, the battery is not damaged, and the propeller is working normally to ensure that the product has enough power to return to the shore safely.
- Before diving with this product, please confirm that you are qualified for diving, you must be equipped with life-saving equipment, take protective measures, and be accompanied by someone.
- Users who cannot swim should use this product in shallow water and confirm that there are other life-saving equipment or swimming/life-saving instructors present.

- When using this product, please wear a life jacket or life-saving equipment, a swimming cap, do not wear loose clothing, and keep a safe distance from the surrounding long hair or wearing loose clothes to avoid long hair or clothing getting caught in the propeller.
- When using this product, please hold the handle firmly and do not point the front and back of the product to your or other people's face, especially the eyes.
- Pay attention to the surrounding environment when using this product to avoid collisions, and do not let algae ropes or other debris wrap around the propeller.
- Do not try this product directly on the beach to avoid sand, shells or other debris into the propeller. This product is rated for a maximum depth of 50 meters only. Do not use deeper than 50 meters.
- Only use charging accessories provided by the manufacturer. No other chargers are allowed. The battery can be charged in a temperature range of 50°F-113°F.
- The battery cannot be disassembled and modified, and cannot withstand strong vibration and shock. After the battery is installed, please handle it with care.
- The battery should not be exposed to moisture, and the metal socket of the battery should not be in contact with any liquid. When installing, removing, and storing batteries, keep the product and your hands completely dry in a dry environment.
- If the battery has abnormal smell, heat, discoloration, deformation, etc. during use or charging, please stop using or charging immediately. If the above abnormal conditions occur during battery storage, please check the storage environment.
- Do not place batteries in microwave ovens, high pressure containers or induction cookers.
- Do not expose the battery to direct sunlight or use or store the battery in a car in hot weather.
- If the battery leaks and the fluid gets in your eyes, do not rub your eyes. Rinse thoroughly with water and seek medical care immediately. Battery fluid may cause damage to eyes if not treated.

2、Features

2.1. Product Image

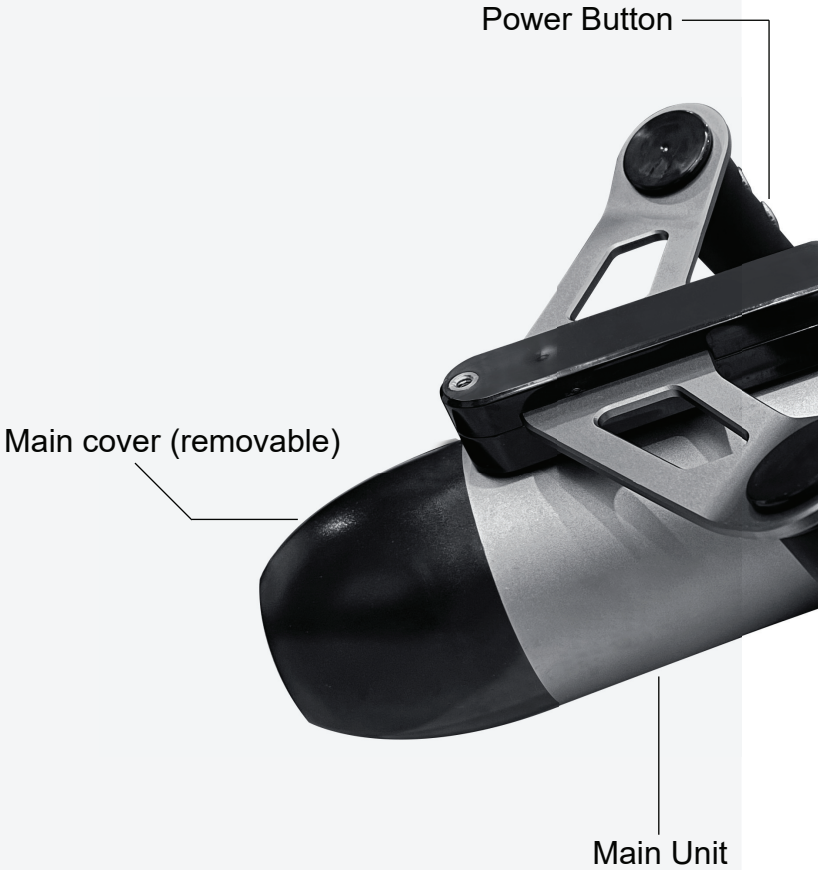

Handle
Propeller
Anti-lost rope buckle

2.2. Handle Device

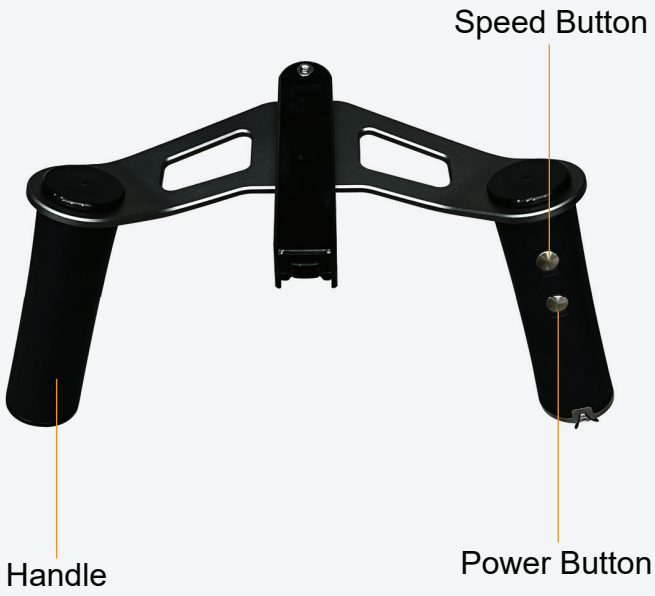

Trigger

3、Assembly

3.1. Handle Assembly

Before using the underwater scooter, make sure the handle is tightened.

The instructions in this step are only suitable for right-handed users, and the left and right positions of this manual can be adjusted according to the user's preference.

Step 1: Take the two handles, handle holder out of the package.

Step 2: Please pay attention to check the front and back direction of the remote control installation, so that the trigger of the remote controller is facing away from the user.

Step 3: Insert the handle knob into the hole on the left side of the handle bracket. Align the handle and tighten the handle.

3.2. Fix the handle bracket to the main unit

Step 1: Press and hold the lock, align the track of the handle bracket to the track of the main unit, slide in the direction as shown in Figure 1, slide to the position as shown in Figure 2 (there will be a slight sound, indicating that it is locked), and release the lock.

Step 2: Check whether the lock is locked or stuck.

Align the track of the handle bracket to the track of the main unit, slide the handle bracket on the track of main unit.

Make sure the lock is locked well.

3.3. Installing and Removing the Battery

Step 1: Open the battery cover and put the battery into the battery compartment.

Step 2: Carefully align the battery pins on the battery, then fit them together.

Step 3: Make sure the battery cover is properly pressed tightly, clockwise rotate to lock the battery in place. When counter-clockwise rotate it, the battery will be unlocked.

Step 4: Clockwise rotate the main unit cover in place. Let the arrow on the main unit cover aim at the sign on the main unit.

Step 5: Reverse operations to remove the battery.

* Important note:

The main unit cover does not have an O-ring.It is normal for water to enter the battery compartment.

4、Charging Instructions

Make sure the battery is fully charged before first use.
Make sure the main unit is turned off before removing the battery.

Please unplug the charger when not charging.

4.1. How to charge the battery

Step 1: Connect the battery charger's AC plug (a) to an AC power source (100V-240V; Use a power adapter to convert if necessary).

Step 2: Fasten the plug pin(b) at the other end of the charger to the battery slot and tighten.

Step 3: The red light indicates that the battery is being charging, and the green light indicates the battery is fully charged. Charging time is about 2 hours.

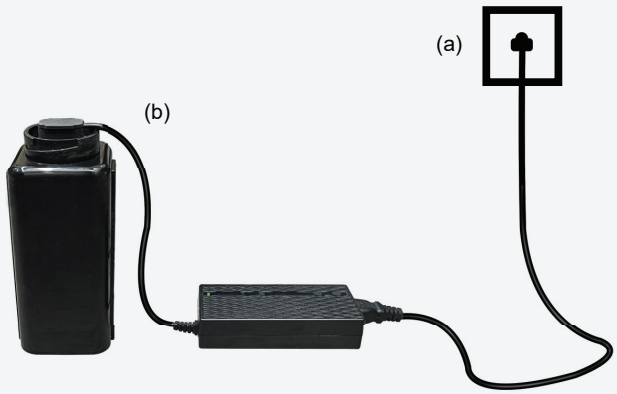

4.2. How to charge the handle (remote controller)

- Make sure the remote controller is turned off before charging.
- Under no circumstances should the remote controller be used while
- It is being charged or connected to an adapter.Please clean the water or dirt before charging.

Step 1: Use the TYPE-C charging cable, insert it into the charging port of the handle to start charging.

Step 2: When the remote controller is being charged, the red light is on. When it is fully charged, the light will turn blue. The charging time is about 2 hours.

5、How to use

5.1. The remote controller and the main unit are paired by default in the factory settings. If not, follow the steps below:

Step 1: The remote controller and main unit are powered off. Make sure the TYPE-C charging port of the remote controller is closed and rotated in place, this operation is very important for waterproofing.

Step 2: Press the power button and speed button of the remote controller simultaneously for about 3 seconds until the red and blue lights flash alternately, and it's in the pairing state (The blue light flashes to indicate no connection or weak signal).

Step 3: Long press the main unit power button to turn on the main unit. The blue light on mean the main unit is already turned on (The blue light grid indicates the battery capacity left).

Step 4: When the indicator on the remote controller shows green, it means the pairing is successful finished and it can be used normally.

⚠ • The effective distance of using the remote controller underwater is less than 1m.

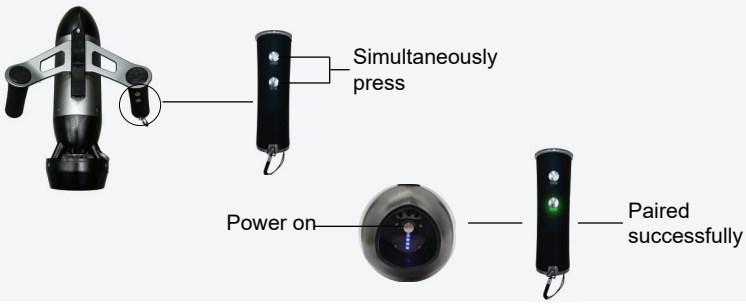

5.2. How to use the underwater scooter(handheld model) after pairing finished

Step 1: Make sure the main unit battery is fully charged and the pa-iring is finished.

Step 2: Short press the speed button to switch low, medium, high speed settings (Repeatly press this button, the three speed sets circularly).

Step 3: Pull the trigger to start moving. Release the trigger and the scooter will slow down till stop.

Step 4: Short press the power button of the remote controller, and the scooter will be suspended. Operate according to steps 2 and 3, it will start to move again.

Step 5: When finished using, long press both power buttons on the remote controller and the main unit for 2 seconds until the indicator goes out, and the scooter is powered off.

* Note: As the battery power drops, the power of the underwater scooter will gradually weaken.

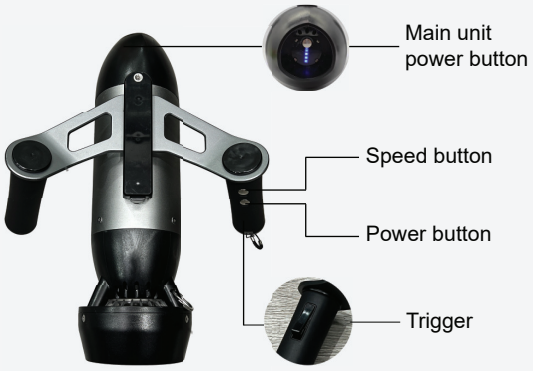

5.3. How to use SUP scooter (if model purchased meets the features)

5.3.1. SUP scooter assembly

Step 1: After the paddle board is inflated and saturated, clean up the bonding part of the SUP paddle board and keep it dry (as shown in the picture).

Step 2: Tear off the 3M adhesive protective film of the SUP clip, and glue the clip to the corresponding position of the paddle board. Use a weight of about 10 kg to press for more than 30 minutes, and then let it stand for more than 8 hours to ensure the bonding effect.

Step 3: Press and hold the lock on SUP clip, align the track of the main unit to the track of the SUP clip, slide the main unit in the direction shown picture (there will be a slight sound, indicating that it is locked), and release the lock (Reverse operation will exit installing).

Step 4: Check whether the lock is locked or stuck.

Clean the bottom of the paddle and keep it dry

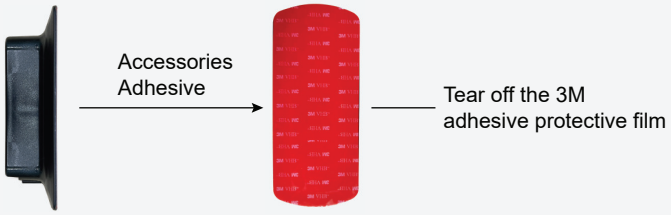

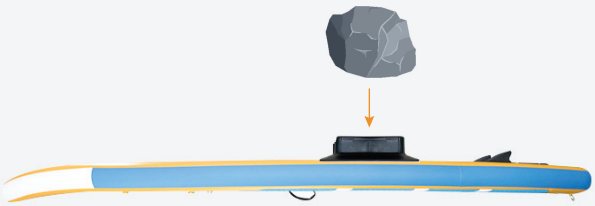

Heavy objects press for more than 30 minutes

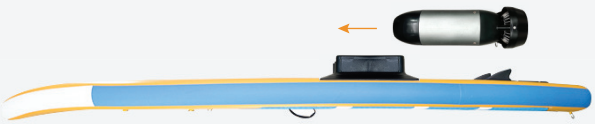

Align the track of the main unit to the track of
the SUP clip and slide it.

5.3.2. How to pair the main unit with the SUP remote controller

The SUP remote controller and the main unit are paired by default in the factory settings. If not, follow the steps below:

Step 1: The SUP remote controller and main unit are powered off. Make sure the TYPE-C charging port knob of the SUP remote controller is closed and rotated in place, this operation is very important for waterproofing.

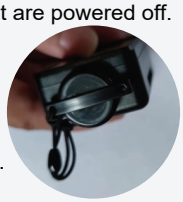

Step 2: Simultaneously press the power button and the speed button of the SUP remote controller for about 3 seconds until the red and blue lights flash alternately, and then enter the pairing state (the blue light flashes to indicate no connection or weak signal)

Step 3: Long press the main unit power button to turn on the main unit. The blue light on means the main unit is already turned on (The blue light grid indicates the battery capacity left).

Step 4: When the indicator on the SUP remote controller shows green, it means the pairing is successful finished and it can be used normally.

5.3.3. How to use the SUP scooter after pairing

Step 1: Make sure the main unit battery is fully charged and the pairing is finished.

Step 2: Short press the speed button of SUP remote controller to switch low, medium, high speed settings (Repeatly press this button, the three speed sets circularly).

Step 3: Short press the power button of the SUP remote controller, and the scooter will stop. Operate according to steps 2, it will start to move again.

Step 4: When finished using, long press both power buttons on the SUP remote controller and the main unit for 2 seconds until the indicator goes out, and the scooter is powered off.

* Note: As the battery power drops, the power of the underwater scooter will gradually weaken.

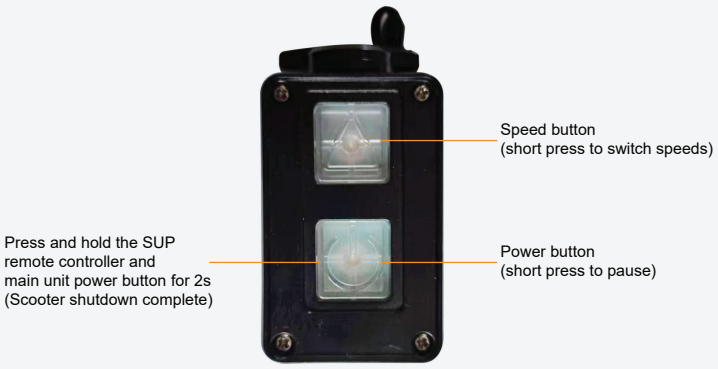

5.4. How to turn on and off the light (fish-attracting light)

Step 1: In the power-on state, long press the speed button on the handle remote controller for 5 seconds to turn off the light, and long press again for 5 seconds to turn on the light.

- The light will flash to remind you of low battery power.

6、Maintenance

To maintain good performance, please follow the steps below to maintain after each use:

Step 1: Immerse the scooter in a container filled with clean fresh water (not seawater) for 30 minutes.

Step 2: Hold the handle with both hands, turn it on slowly for one minute, repeat 2-3 times until the product is completely immersed in water.

Step 3: Dry the main unit with a soft, clean, dry cloth.

Step 4: Open the cover of the main unit, wipe off the water droplets outside the battery compartment, open the battery cover after drying your hands, and take out the battery.

Step 5: Put the main unit and battery in a cool and ventilated place to dry completely.

6.1. Clean issues

If the propeller is caught by foreign objects, please pull out the propeller cover to open it for cleaning.

- Before proceeding with the following operations, make sure the power is turned off and the batteries are removed.
- Watch your fingers when cleaning dirt from the propeller.
- Avoid damaging the propeller when cleaning, as it is an essential part of the scooter.

Step 1: Remove the 3 screws on the propeller cover at the bottom of the scooter and pull it out (please pay attention to avoid damage)

Step 2: Rotate the auger to clean foreign objects.

Step 3: Reverse operation after completing the above steps.

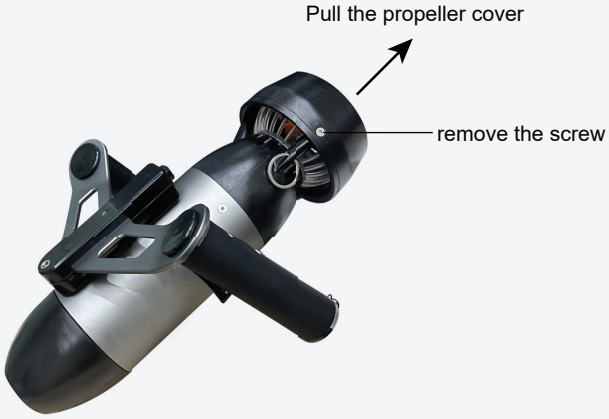

6.2. Storage

- Please do not store the scooter in an environment where the temperature is too high or too low, too dry or too humid, exposed to direct sunlight and dusty, as it may cause damage over time.
- Fully charge the battery before storing to prevent over-discharging when not in use.
- If not used for a long time, please charge the battery every three months.
- Storage temperature should not exceed 14°F ~ 122°F(-10°C ~ 50°C)
- If water is found in the positive and negative terminals of the battery,please put the battery in a safe place immediately, do not charge it and contact the dealer.

6.3. Disposal

◆ This product should not be disposed of by incineration, landfill or in a manner that presents a chemical risk to the environment. The recommended disposal of any thruster at the end of its life cycle is to dispose of the entire unit at or through an e-waste recycling center, program or facility.

◆ Local regulations and laws regarding the recycling and disposal of lithium-ion batteries and/or products containing lithium-ion batteries vary by country, state and local government. You must check the laws and regulations corresponding to where you live in order to properly dispose of the battery and/or device. It is the user's responsibility to dispose of waste equipment properly in accordance with local regulations and laws.

◆ For more information on where to dispose of batteries and electrical or electronic waste, please contact your local or regional waste management office, your household waste disposal service or your point of sale.

7、Product Specifications

Product parameters:
1. Maximum diving depth: 50m underwater
2. Maximum speed on water: 7.5km/h
3. Maximum speed underwater: 6.5km/h
4. Battery life: 35~70min
5. Product size: 398*340*125mm (assembled)
6. Product weight: 3.7kg (including built-in battery)
7. Waterproof grade: IP68
Motor:
1. Motor type: brushless, waterproof, sandproof
2. Maximum power: 400W
3. Maximum output current: 18A
4. Maximum thrust: 80N

7、Product Specifications

Battery:
1. Battery capacity: 153.6Wh
2. Working voltage: 25.6V
3. Battery charging time: 2hours
4. Battery size: 78*74*176mm
5. Battery weight: 1.69Kg
6. Waterproof grade: IP68

Note:

1. As the battery power drops, the power of the underwater scooter will gradually weaken.
2. This parameter is for reference only. The specific use time will vary with different gears, user weight, use environment and frequency of use.
3. The camera bracket of this product only supports some types of cameras, and other types of brackets need to be purchased separately.

8. Warranty Service

Main:

The company guarantees that the products you purchase are designed and manufactured in accordance with qualified standards. Under normal use, there are no functional defects during the warranty period. If you encounter any problems during use, we recommend that you check the user manual first, in addition, you can also download user manuals, FAQs, teaching videos or support forum service ranges on our website.

Service scope:

The underwater scooter includes a one-year limited hardware warranty from the date of sales invoice, 12 months on the main body and 6 months on the battery. If you are unable to provide an invoice or other valid proof of purchase, the warranty period will begin on the date of manufacture shown on the product or 90 days as otherwise stated. If repair is not feasible or commercially feasible, we may replace this product. For new or refurbished products with similar functionality, after repair, firmware upgrade and replacement, the replaced product or accessory will be covered by the remaining warranty period of the original product. same warranty.

How to get after-sales service:

If the product does not work properly during the warranty period, please contact us by phone or WeChat to obtain after-sales service. In some regions, after-sales service may not be provided, and the after-sales service policy varies from region to region. Additional charges may apply for services outside of the regular range of services, please contact us for information specific to your location.

What to do before getting after-sales service:

Please explain the problem of the product after contacting the after-sales service. A technician will attempt to diagnose and resolve your issue via phone, email, or remote assistance. If your problem cannot be resolved over the phone, you may need to send the product to the factory for further inspection. We will arrange repair or replacement under this Limited Warranty.

Product and Parts Replacement:

When after-sales service involves the replacement of a product or part, the replaced product or part will erode the characteristics of the electronic product and the replaced product or part will become your property. Only unaltered products and parts are eligible for replacement. Replacement products or parts provided by us may not be new, but will be in good working condition and at least functionally equivalent to the original product or part under warranty. Replacement products or parts shall be covered for the remainder of the original product warranty.

8. Warranty Service

Use of Personal Contact Information:

If you obtain services under this policy, you authorize the storage, use and processing of your contact information, including name, telephone number, address and email address. You agree and understand that it is necessary for us to collect, process and use your information to perform services in accordance with this policy and we may contact you to inquire about your satisfaction with our services or to notify you of any product recalls or safety issues. In order to achieve these goals, you authorize the transfer of your information to any country in which we do business and provide it to entities acting on our behalf. We may also disclose your information where required by law.

Content not covered by this after-sales policy:

Collision or burning accidents caused by man-made and non-product quality problems Damage caused by unauthorized modification and shelling under the guidance of unofficial instructions. Damage caused by improper installation, use, and operation not in accordance with the instruction manual. The customer repairs the parts by himself or entrusts an unauthorized service agency to repair/modify the parts without official instructions.
The unofficial user manual guides damage from improper circuit modifications, mismatched batteries and chargers, or misuse. Damage caused by misuse of the product or handling the product under environmental conditions not in accordance with the user manual
Damage caused by peripherals, add-ons, or accessories not recommended in the user manual. Damage caused by insufficient battery power or insufficient discharge when using a battery with quality problems. The device has been damaged, including but not limited to damage caused by animals, lightning, abnormal voltage, fire, natural disasters, and transportation.
Products or parts whose identification labels have been altered or whose model number, serial number, and date of manufacture have been removed or cannot be identified.
The product cannot be used normally because the product is not used in the country where it was originally designed, manufactured or approved for use.
For third-party applications you use on the Product.

Limitation of Liability:

The company is only liable for loss or damage if: Your product is owned or in transit. In no event shall the Company, nor any of its affiliates, suppliers, distributors or service providers be liable, even if advised of the possibility thereof, for any of the following, notwithstanding that the essential purpose of any of the remedies set forth herein has not been achieved. , and regardless of whether the claim is based on a contract, warranty, strict liability or other theory of liability:
1) a third party files a claim for damages against you;
2) In no event shall Affiliates be liable in its entirety for special, incidental, punitive, indirect or consequential damages, including, but not limited to, lost profits, business income, goodwill, or anticipated savings. The supplier, dealer or service provider's damages from any cause exceed the amount actually lost, but not more than the amount paid for the product.