Radar Module

Model No. : DNS-010CX
X-Band Microwave Motion Sensor Module

■ Features

- X-Band Radar Motion Sensor Module(Small Type) -

* Used a RF the Microwave Sensor.
* The up-to-date sense which uses Doppler principle.
* Low cost & Low Power Consumption.
* Very Small Size(28.2* 18.7*10mm) and Flat Profile.
* Reliable Construction & High Sensitivity.

■ Interface

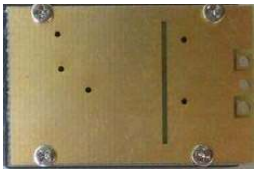

1 : 5V
2 : GND
3 : IF

■ Outline Drawing

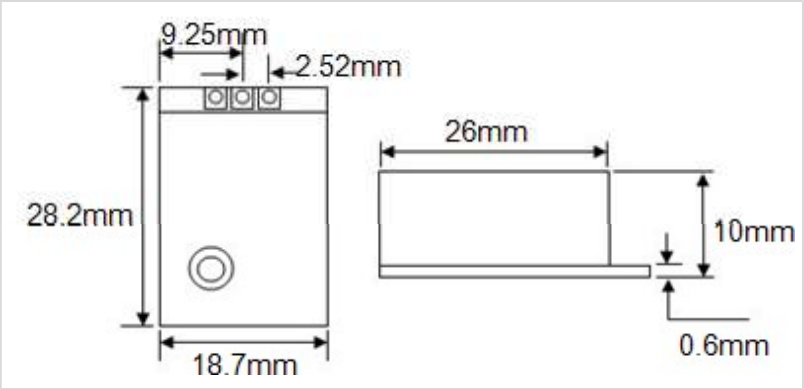

■ Specification(Model No.:DNS-010CX)

(Transmitter)

Frequency : **10.525GHz.**
Frequency Setting Accuracy : 3MHz
Power Output (Min.) : 5dBm EIRP
Operating Voltage : +5V ± 0.3V(Option : +3.3V ± 0.3V)
Operating Current (CW) : 20mA~25mA typical Harmon
ic Emissions : < -30dBm

(Pulse Mode Operation)

Average Current (5% DC) : 1 mA typ.
Pulse Width (Min.) : 5 micro Sec Dut
y Cycle (Min.) : 1%

(Receiver)

Sensitivity (10dB S/N ratio) in 3Hz to 80Hz bandwidth : TDB dBm
Noise in 3Hz to 80Hz bandwidth : TDB micro V
Antenna Gain:0dBi
E Plane 3dB Beam width : 50°. H Plane 3dB Beam width : 60°.

(Module Characteristics)

Operating Temperature Range : -15'C to +55'C
Storage Temperature Range : -30'C to +70'C
Detection Range : 7M ~ 8M(Wall Type). 5M Diameter(Ceiling Type).
Weight : 6 grams.
Size(mm,+/-0.2) : 28.2 * 18.7 * 10

Dnet
Microwave Radar Sensor

■ Antenna Pattern(DNS-010CX)

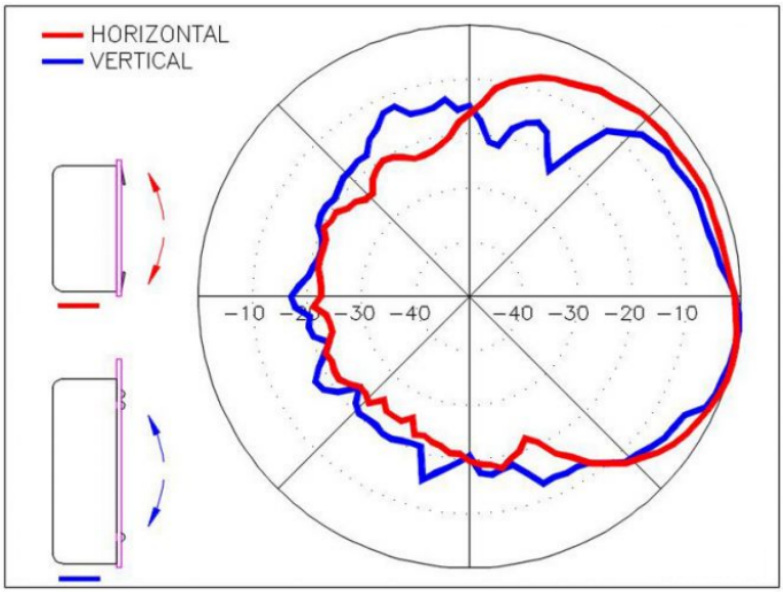

■ Applications

1. security relation products (sensor and alarm set etc).
2. Home Automation
3. automobile rear collision warning.
4. automatic door sensor.
5. sensor light.
6. sensors it applies in all products which operate.

■ Summary of Microwave Motion Sensor Module

1. Microwave Motion Sensor Module is developed applying Doppler Radar principle.
2. The role of Sensor Module is transmitting a low power Microwave from transmitting antenna and receiving the microwave energy reflected by objects to receiving antenna.
3. If the movement of the object is detected by the microwave motion sensor, the reflected microwave frequency is shifted away from the transmit frequency to receiving antenna.
4. The reflected and shifted microwave frequency is mixed with the transmit microwave frequency and results a low frequency voltage at the output of the sensor.
5. The Microwave Motion Sensor Module is designed with Dielectric Resonator Oscillator(DRO).