User Manual

Version 1.0

Revision History

Rev No.	Change Notification	Date	Remarks
V1.0	Draft	2023.09.14	

Index

1. FCC and ISED Mandatory 6

1.1 FCC Warning States 6

1.1.1 FCC (EMI) Warning 6

1.1.2 FCC Warning Label 6

1.2 ISED Warning states 7

1.2.1 ISED Warning label 7

1.3 FCC & ISED Label Placement ..... **오류! 책갈피가 정의되어 있지 않습니다.**

2. General Information 8

2.1 Repeater Information (FCC & IC ID) 9

2.2 Purpose 9

2.3 Advantages 9

2.4 Exterior 10

2.5 Interior 11

3. Specifications 12

3.1 Frequency Range 12

3.2 RF Specifications 12

3.3 Mechanical Specifications 13

4. Integrated Enclosure Interfaces 14

4.1 DONOR & SERVICE Connector 14

4.2 DC POWER & BATTERY ALARMS Feedthrough 14

4.3 REMOTE ANNUNCIATOR Feedthrough 15

4.4 ALARM Feedthrough 15

4.5 NETWORK Connector 15

5. LED Indicators 17

5.1 SYSTEM LED 17

5.2 ANNUCIATOR LEDs 17

6. Installation Guide 19

6.1 Environment 19

6.1.1 Antenna 19

6.1.2 Isolation Check and Gain Setting 19

6.2 Mounting the BDA 19

6.2.1 Installation of Concrete Wall 19

6.2.2 Installation of Wooden Wall 20

7. Web GUI Configuration 21

7.1 Web GUI Overview 21

7.2 Laptop Configuration for Connect to the Repeater 21

7.2.1 GUI Port Connect 21

7.2.2 NMS Port Connect 22

7.3 Web GUI Connect and Sign In 22

7.4 System Setting Screen 23

7.5 RF Configuration / General / Operation Screen 24

7.6 Filter Screen 25

7.7 Alarm Screen 26

7.8 Table Screen 27

7.9 Firmware Update Screen 27

8. Troubleshooting 29

8.1.1 Simple Troubleshooting Method 29

8.1.2 Troubleshooting Guide Related to System Operation 29

8.1.3 Troubleshooting Guide Related to Alarm State 30

8.1.4 Troubleshooting Guide Related to NMS 31

1. FCC and ISED Mandatory

1.1 FCC Warning States

1.1.1 FCC Part 15.19 Warning

The device complies with part 15 of the FCC Rules. Operation is subject to the following two conditions: (1) This device may not cause harmful interference, and (2) this device must accept any interference received, including interference that may cause undesired operation.

1.1.2 FCC Booster warning Label

1) Part 90 and Part 20 Signal Boosters – THIS IS A 90.219 CLASS A DEVICE

WARNING. This is NOT a CONSUMER device. It is designed for installation by FCC LICENSEES and QUALIFIED INSTALLERS. You MUST have an FCC LICENSE or express consent of an FCC Licensee to operate this device. You MUST register Part 90 Class B signal boosters (as defined in 47 CFR 90.219) online at www.fcc.gov/signal-boosters/registration. Unauthorized use may result in significant forfeiture penalties, including penalties in excess of $100,000 for each continuing violation.

2) Part 90 Signal Boosters – THIS IS A 90.219 CLASS B DEVICE

WARNING. This is NOT a CONSUMER device. It is designed for installation by FCC LICENSEES and QUALIFIED INSTALLERS. You MUST have an FCC LICENSE or express consent of an FCC Licensee to operate this device. You MUST register Class B signal boosters (as defined in 47 CFR 90.219) online at www.fcc.gov/signal-boosters/registration. Unauthorized use may result in significant forfeiture penalties, including penalties in excess of $100,000 for each continuing violation.

1.1.3 FCC Booster warning statements

Use of unauthorized antennas, cables, and/or coupling devices not conforming with ERP/EIRP and/or indoor-only restrictions is prohibited.

Home/ personal use are prohibited

Only 50 ohm rated antennas, cables and passive equipment shall be used with this remote. Any equipment attached to this device not meeting this standard may cause degradation and unwanted signals in the bi-directional system. All components connected to this device must operate in the frequency range of this device.

1.1.4 FCC Part 15 Class A

NOTE: This equipment has been tested and found to comply with the limits for a Class A digital device, pursuant to part 15 of the FCC Rules. These limits are designed to provide reasonable protection against harmful interference when the equipment is operated in a commercial environment. This equipment generates, uses, and can radiate radio frequency energy and, if not installed and used in accordance with the instruction manual, may cause harmful interference to radio communications. Operation of this equipment in a residential area is likely to cause harmful interference in which case the user will be required to correct the interference at their own expense.

1.1.5 RF Radiation Exposure

This equipment complies with RF radiation exposure limits set forth for an uncontrolled environment. This equipment should be installed and operated with a minimum distance of 70 cm between the radiator and your body. This transmitter must not be co-located or operating in conjunction with any other antenna or transmitter. RF exposure will be addressed at time of installation and the use of higher gain antennas require larger separation distances.
(DL: Pannel antenna Max. peak gain: 7 dBi, UL: LDPA antenna Max. peak gain: 12 dBi)

1.2 ISED Warning states

1.2.1 ISED Warning label

WARNING: This is NOT a CONSUMER device. It is designed for installation by an installer approved by an ISED licensee. You MUST have an ISED LICENCE or the express consent of an ISED licensee to operate this device.

AVERTISSEMENT: Ce n'est PAS un appareil de consommation. Il est conçu pour être installé par un installateur approuvé par un titulaire de licence d'ISD. Vous DEVEZ avoir une LICENCE d'ISDE ou le consentement exprès d'un titulaire de licence d'ISDE pour utiliser cet appareil.

1.2.2 RSS-GEN (6.8 Transmit antenna)

Under Industry Canada regulations, this radio transmitter may only operate using an antenna of a type and maximum gain approved for the transmitter by Industry Canada. To reduce potential radio interference to other users, the antenna type and its gain should be so chosen that the equivalent isotropically radiated power (e.i.r.p.) is not more than that necessary for successful communication.

Confonctionneravec une antenne d'un type et d'un gain maximal approuvé pour l'émetteur par Industrie Canada. Dans le but de réduire les risques de brouillage radioélectrique à l'intention desautres utilisateurs, il faut choisir le type d'antenne et son gain de sorte que la puissance isotroperayonnée quivalente (p.i.r.e.) ne dépassepas l'intensité nécessaire à l'établissement d'une communication satisfaisante.

1.2.3 RF Radiation Exposure

This equipment complies with RF radiation exposure limits set forth for an uncontrolled environment. This equipment should be installed and operated with a minimum distance of 70 cm between the radiator and your body. This transmitter must not be co-located or operating in conjunction with any other antenna or transmitter. RF exposure will be addressed at time of installation and the use of higher gain antennas require larger separation distances.
(DL: Pannel antenna Max. peak gain: 7 dBi, UL: LDPA antenna Max. peak gain: 12 dBi)

L'antenne (ou les antennes) doit être installée de façon à maintenir à tout instant une distance minimum de au moins 70 cm entre la source de radiation (l'antenne) et toute personne physique. Cet appareil ne doit pas être installé ou utilisé en conjonction avec une autre antenne ou émetteur.
(DL: Pannel antenna Max. peak gain: 7 dBi, UL: LDPA antenna Max. peak gain: 12 dBi)

This document is primarily written for those who are new to 700/800 0.5W BDA system and wish to tune up the equipment. The document is applicable to below products from Innertron. Model number: IT109B005.

1.1 Repeater Information (FCC & IC ID)

CERTIFICATION	TYPE	ID	NOTES
FCC	B9A	2BCYP-IT7080BDA27DA	
	B9B	2BCYP-IT7080BDA27DB	
IC	B9A	30914-IT109B005A	
	B9B	30914-IT109B005B	

1.2 Purpose

700/800 0.5W BDA is a system that generally supports public safety wireless services indoors, and is necessary for first aid workers and firefighters to communicate with each other in emergencies and normal situations.

700/800 0.5W BDA is a digital repeater that supports 700MHz band and 800MHz band. Bandwidth varies based on FPGA, and up to 32 channels can be selectively serviced through software through Digital Filter.

1.3 Advantages

- 700MHz/800MHz dual band
- 32 channel class A and B filter per band
- Automatic gain control
- UL squelch
- Oscillation detection
- Isolation check
- Auto shutdown to protect repeater from overpower and oscillation
- VSWR Monitoring
- LED for status check

1.4 Exterior

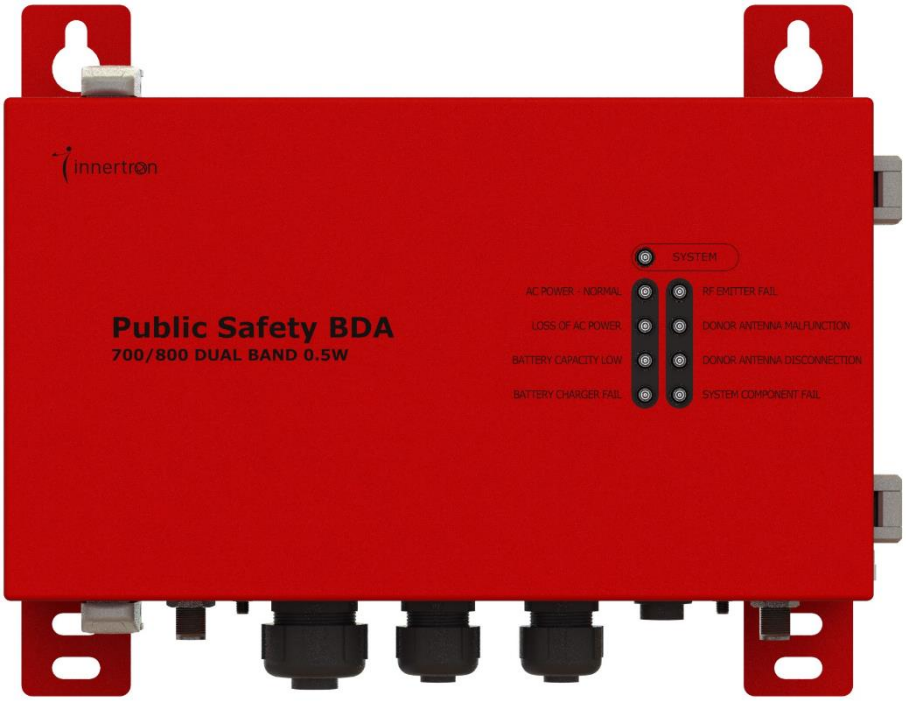

No.	PARAMETER	DESCRIPTION	NOTES
1	DONOR	Donor antenna port	N-type
2	SERVICE	Service antenna port	N-type
3	TX CPL	UL output coupling port	SMA
4	RX CPL	DL output coupling port	SMA
5	DC POWER & BATTERY ALARMS	DC power and associated UL2524 status and alarms	Liquid Tight Conduit Fittings (3/4 inch)
6	REMOTE ANNUNCIATOR	Provide power and alarm signaling to a remote annunciator	Liquid Tight Conduit Fittings (1/2 inch)
7	ALARM	Provide wired connection to alarm	Liquid Tight Conduit Fittings (1/2 inch)
8	NETWORK	Communications with a network	RJ-45

1.5 Interior

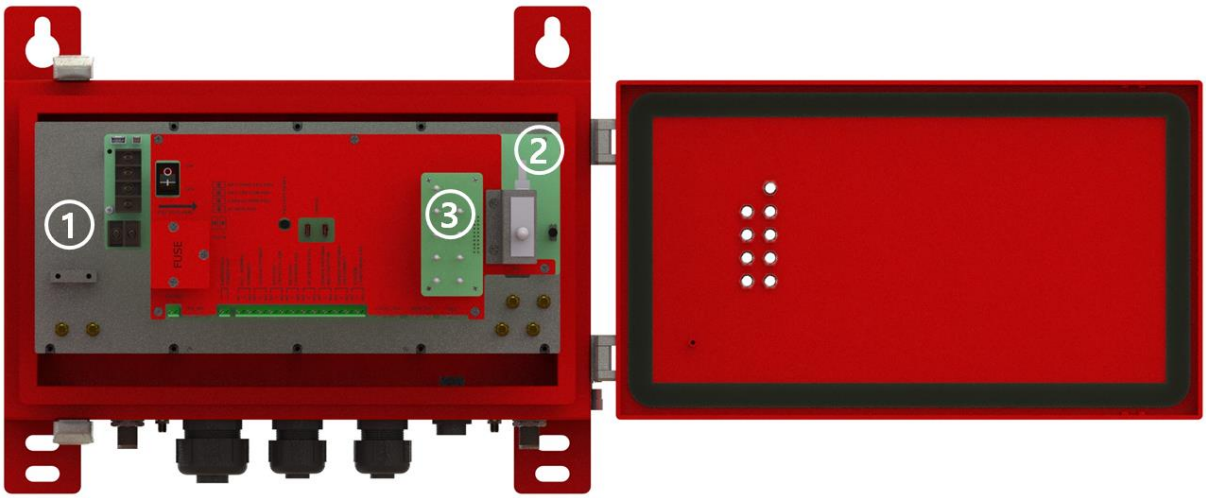

No.	PARAMETER	DESCRIPTION	NOTES
1	RFM & DTU	RF Board, Digital Board and PAMs are built in	Top: RF Board Bottom: DTU, PAM
2	WEB GUI/ALARM Board	Web GUI and Alarm functionality integrated into one board	
3	LED	Display of system and alarm state	9 LEDs

2. Specifications

2.1 Frequency Range

SERVICE BAND	DOWNLINK [MHz]			UPLINK [MHz]		
	LOW	CENTER	HGH	LOW	CENTER	HGH
700MHz (US)	769	772	775	799	802.5	805
700MHz (CANADA)	768	772	776	798	802	806
800MHz (US)	851	856	861	806	815	816
800MHz (CANADA)	866	867.5	869	821	822.5	824

2.2 RF Specifications

PARAMETER		DOWNLINK	UPLINK
Output Power	700MHz	27dBm	24dBm
	800MHz	27dBm	24dBm
Input Dynamic Range		-63dBm ~ -3dBm	-56dBm ~ +4dBm
Gain Range		30dB ~ 90dB	20dB ~ 80dB
Gain Adjustment Range per CH		30dB/1.0dB steps	
Gain Adjust Accuracy		±1dB	
Input AGC Dynamic Range		60dB	
Max RF Input Power without Overdrive		+0dBm	+10dBm
Max RF Input Power without Damage		+20dBm	
Noise figure		6dB Max @ Max Gain	
Pass Band Ripple		3dB peak to peak	
Number of Channel Filter	Class A	32 Channel	
	Class B	32 Channel	
Filter Bandwidth	Class A	12.5kHz, 75kHz	
	Class B	150kHz, 250kHz	
Delay	Class A	< 60us @ 12.5kHz	
		< 15us @ 75kHz	
	Class B	< 15us @ 150kHz	
		< 15us @ 250kHz	
EVM		≤ 4.0% @ P25 phase 1 and phase 2 modulation	

UL Squelch Threshold	-70~-100dBm @ Per Class A and B Channel, must have a disable
VSWR	≤1.5:1
Spurious	< -13dBm (FCC Title 47 Part 90.219)
Characteristic Impedance	50Ω

2.3 Mechanical Specifications

PARAMETER	DESCRIPTION	NOTES
Dimensions (H x W x D)	380 x 220 x 100mm	
Weight	≤ 7kg	
Operating Voltage	12VDC	
Power Consumption	≤ 70W	
Operating Temperature	-30 ~ +50°C	
Operating Humidity	≤ 95%	
Enclosure Cooling	Convection	
Enclosure Class	UL 50/Type 4X	

3. Integrated Enclosure Interfaces

3.1 DONOR & SERVICE Connector

700/800 0.5W BDA adopts an N-type female connector. If the user wants to use a Mini-DIN 4.3/10 cable or connector, they need an adapter.

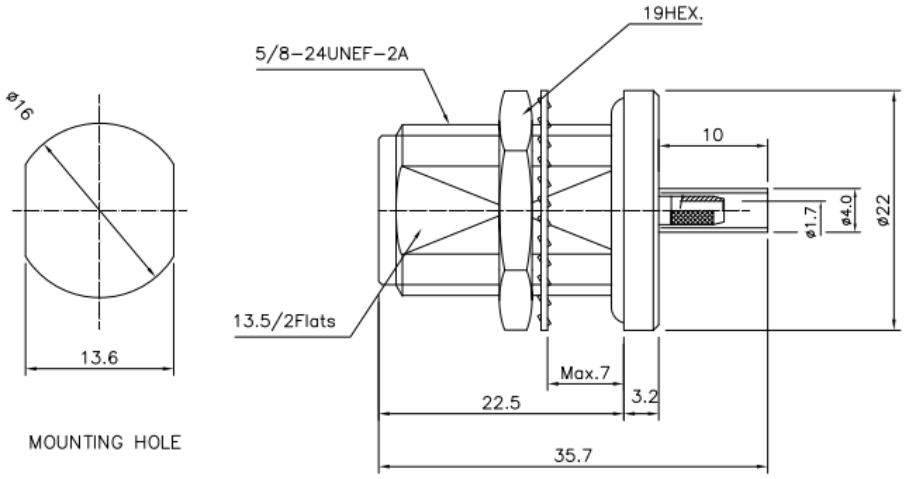

3.2 DC POWER & BATTERY ALARMS Feedthrough

BDA uses only 12V DC voltage. If the user uses other un-recommend input voltages, 700/800 0.5W BDA may be broken. DC POWER & BATTERY ALARM feedthrough uses 3/4 inch liquid tight conduit fittings.

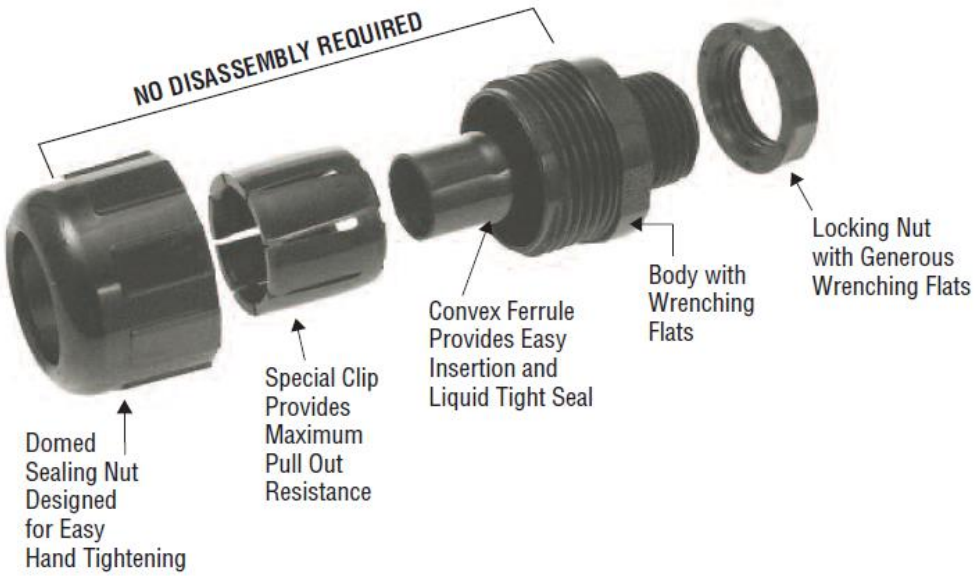

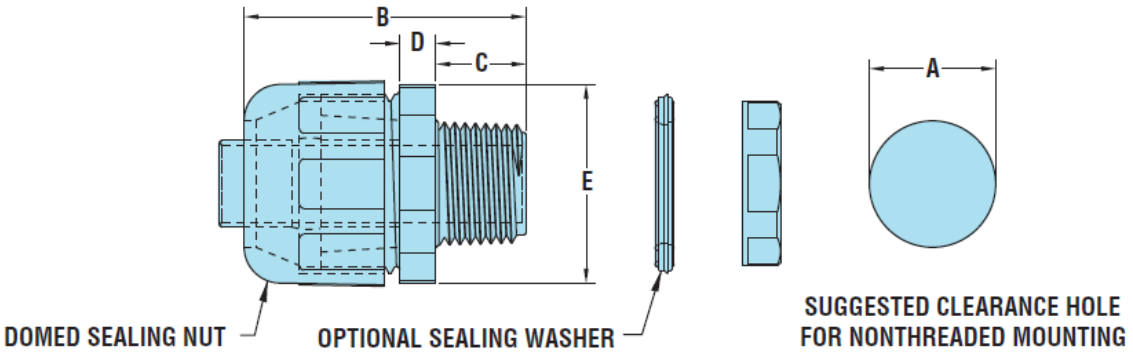

FITS CONDUIT/ TUBING TRADE SIZE	PART NO.		DESCRIPTION	THREAD SIZE	PART DIMENSIONS BODY AND SEALING UNIT									
	Black	Gray			A Clearance Hole		B Max. O.A. Length		C Thread Length		D Wrenching Nut Thk.		E Wrenching Flat Size	
					in.	mm.	in.	mm.	in.	mm.	in.	mm.	in.	mm.
1/4	**8398**	-	HFC 1/4-PG7*	PG7	.492	12,5	1.13	28,7	.45	11,4	.21	5,3	1.00	25,4
3/8	**8400**	**8401**	HFC 3/8	1/2″ NPT	.875	22,2	1.96	49,8	.63	16,0	.25	6,3	1.33	33,7
1/2	**8402**	**8403**	HFC 1/2		**									
3/4	**8404**	**8405**	HFC 3/4	3/4″ NPT	1.109	28,1	2.04	52,8	.63	16,0	.25	6,3	1.56	39,6
1	**8406**	**8407**	HFC 1	1″ NPT	1.375	34,9	2.25	57,2	.78	19,8	.25	6,3	1.81	46,0
1-1/4	**8638**	**8639**	HFC 1-1/4 †	1-1/4″ NPT	1.734	44,0	2.07	52,6	.69	17,4	.25	6,3	2.15	54,6
1-1/2	**8640**	**8641**	HFC 1-1/2 †	1-1/2″ NPT	1.984	50,4	2.28	57,9	.78	19,8	.28	7,0	2.40	61,0
2	**8642**	**8643**	HFC 2 †	2″ NPT	2.469	62,7	2.26	66,0	.85	21,6	.31	7,9	2.98	75,6

3.3 REMOTE ANNUNCIATOR Feedthrough

Feedthrough to provide power and alarm signaling to a remote annunciator. That uses 1/2 inch Liquid Tight Conduit Fittings.

3.4 ALARM Feedthrough

Feedthrough to provide wired connection to one status signal and 7 UL2524 required alarms. That uses 1/2 inch Liquid Tight Conduit Fittings.

3.5 NETWORK Connector

Ethernet connector port for communications with a network. User can use the Web GUI to control and monitor the BDA in remote or local locations.

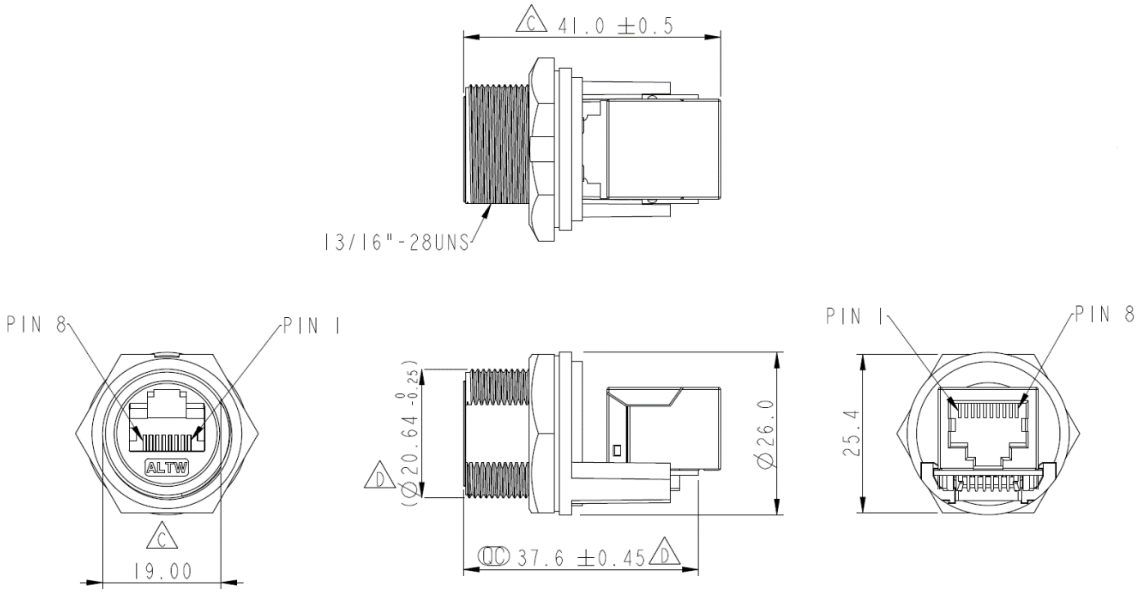
41.0 ±0.5
13/16"-28UNS
PIN 8
PIN 1
ALTW
19.00
20.64 -0.25
26.0
37.6 ±0.45
PIN 1
PIN 8
25.4

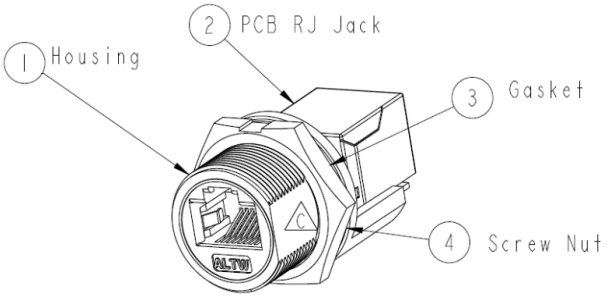
1 Housing
2 PCB RJ Jack
3 Gasket
4 Screw Nut
ALTW

4. LED Indicators

The BDA has 1 system LED and 8 alarm LEDs that visibly display system status and UL2524 alarms.

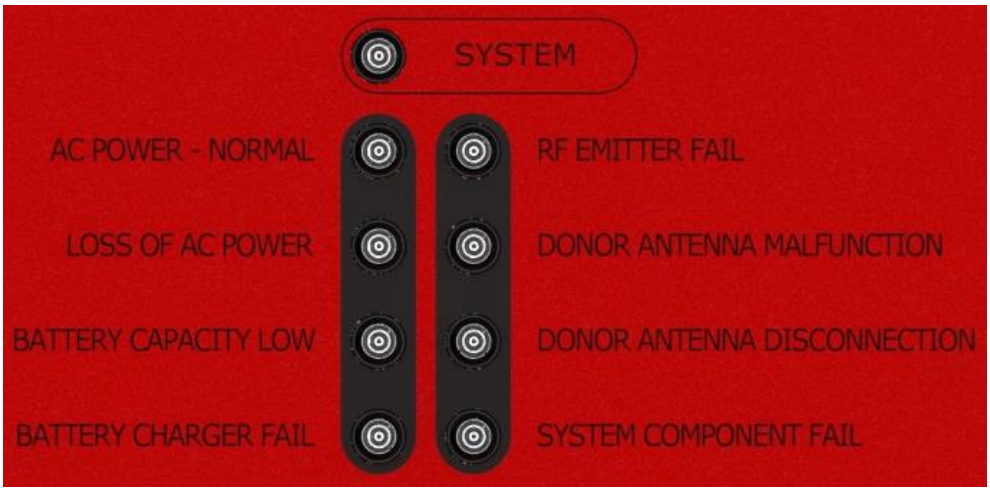

4.1 SYSTEM LED

The SYSTEM LED is a tricolor LED - GREEN, YELLOW, RED

LED COLOR	STATE
GREEN	SYSTEM NORMAL - POWER ON
YELLOW	ANY ALARM DETECTED - SYSTEM OPERATIONAL
RED	ANY ALARM DETECTED - SYSTEM NOT OPERATIONAL
GREEN	ALARM RELAY INTERFACE ALARM ACTIVE BUT MASKED
OFF	NO DC POWER PRESENT

4.2 ANNUCIATOR LEDs

There are 8 LEDs which colors are defined as follows:

LED COLOR	STATE
GREEN	AC POWER NORMAL
RED	LOSS OF AC POWER
RED	BATTERY CAPACITY LOW
RED	BATTERY CHARGER FAIL
RED	RF EMITTER FAIL

RED	DONOR ANTENNA MALFUNCTION
RED	DONOR ANTENNA DISCONNECTION
RED	SYSTEM COMPONENT FAIL

5. Installation Guide

5.1 Environment

5.1.1 Antenna

The antenna used in the BDA must be certified or an antenna with equivalent specifications. The company shall not bear any liability for any problems arising from the use of an uncertified antenna.

The donor antenna must be mounted outside the building with the strongest cell signals. Mount the donor antenna as high as possible facing towards the desired location of the cell tower and facing the opposite direction of the expected location of the service antenna.

The server antenna must be mounted

5.1.2 Isolation Check and Gain Setting

If the system wants to operate in the max gain state, the system requires sufficient isolation between the donor and service antennas. The system recommends isolation be higher than 20dB above the gain of the system. If isolation is not sufficiently ensured, the Isolation Check function operates to reduce the gain to a level suitable for the ensured isolation.

5.2 Mounting the BDA

Choose a location for the BDA, preferably away from excessive heat, direct sunlight, moisture and is free from high temperatures.

5.2.1 Installation of Concrete Wall

The following illustration is an example of a concrete wall installation.

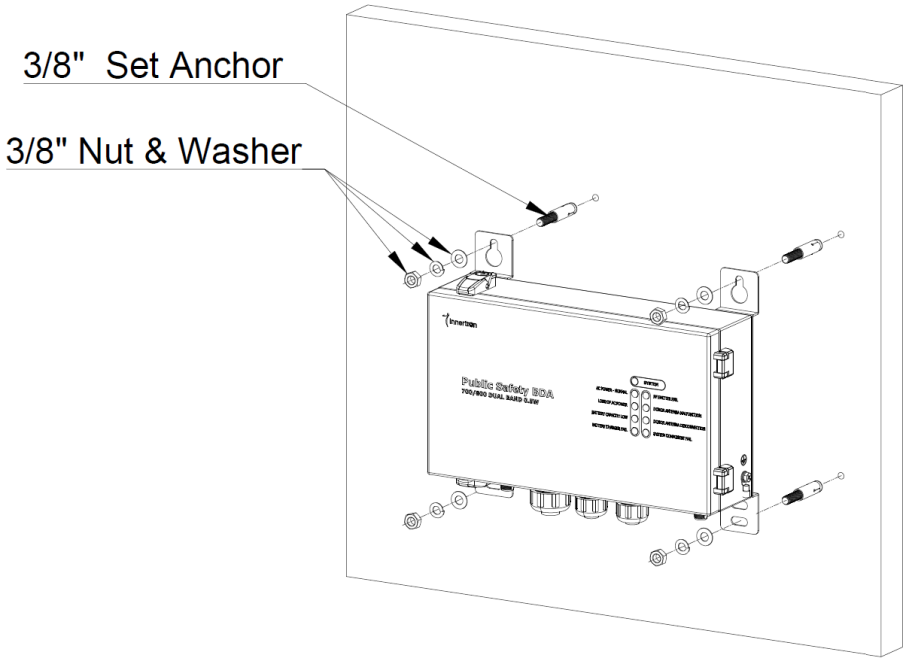

5.2.2 Installation of Wooden Wall

The following illustration is an example of a wooden wall installation.

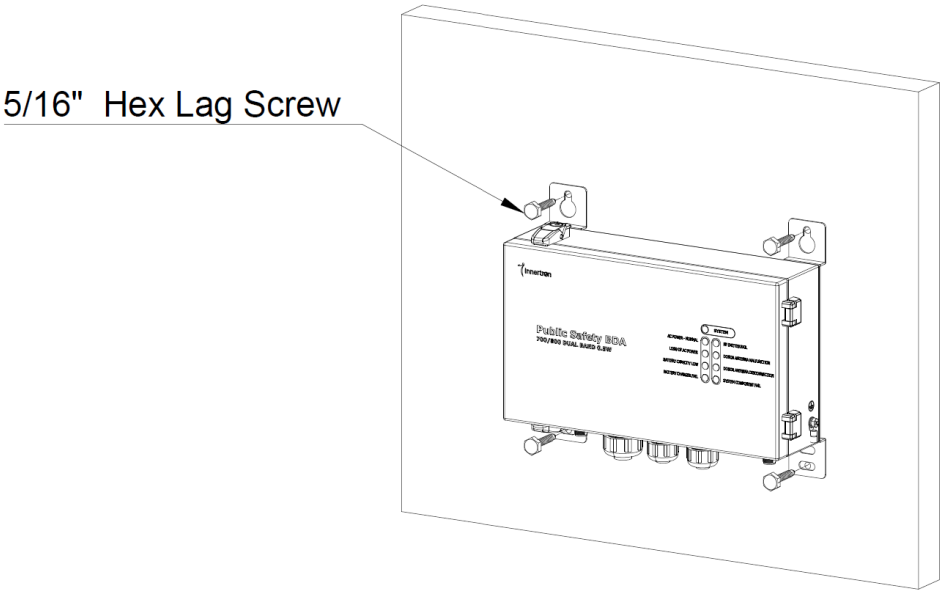

6. Web GUI Configuration

6.1 Web GUI Overview

Supports Web GUI pages through the ethernet interface.

6.2 Laptop Configuration for Connect to the Repeater

Connect the ethernet cable to the GUI port at the bottom of the repeater or the NMS port inside the repeater.

6.2.1 GUI Port Connect

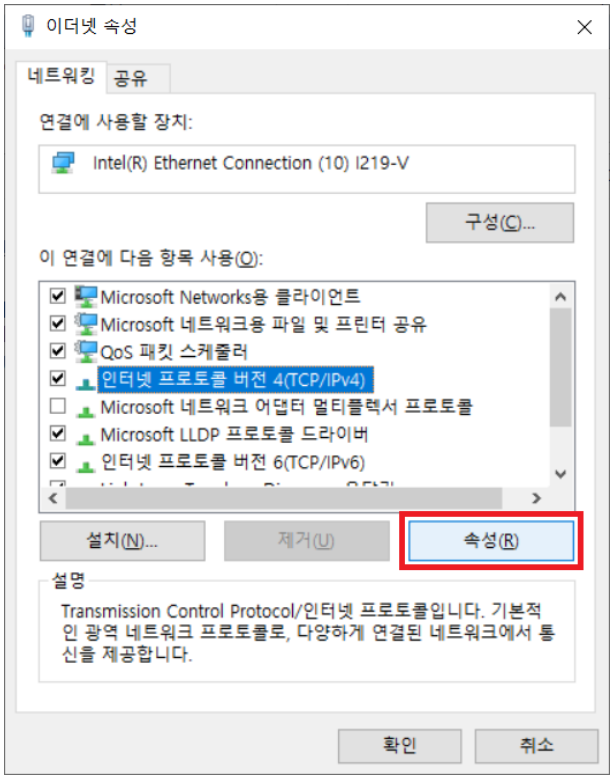

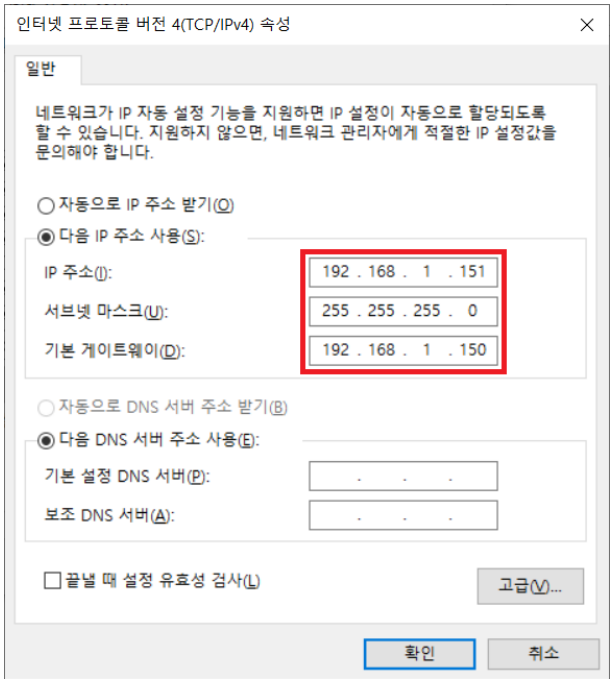

1) Select 'Internet Protocol Version 4(TCP/IPv4)' in the Ethernet Properties window and click Properties.
2) Enter the IP address (192.168.1.151), the subnet mask (255.255.255.0), and the default gateway (182.168.1.150) as shown in the figure above, and then click OK.

6.2.2 NMS Port Connect

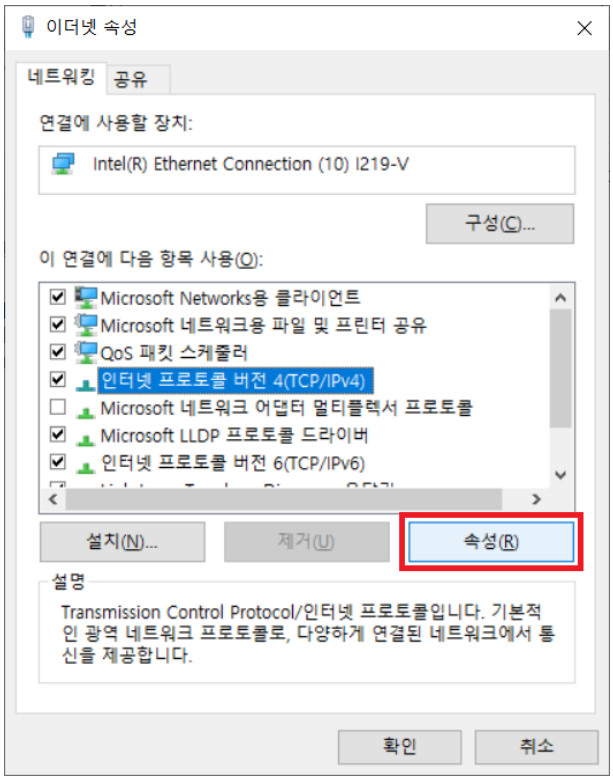

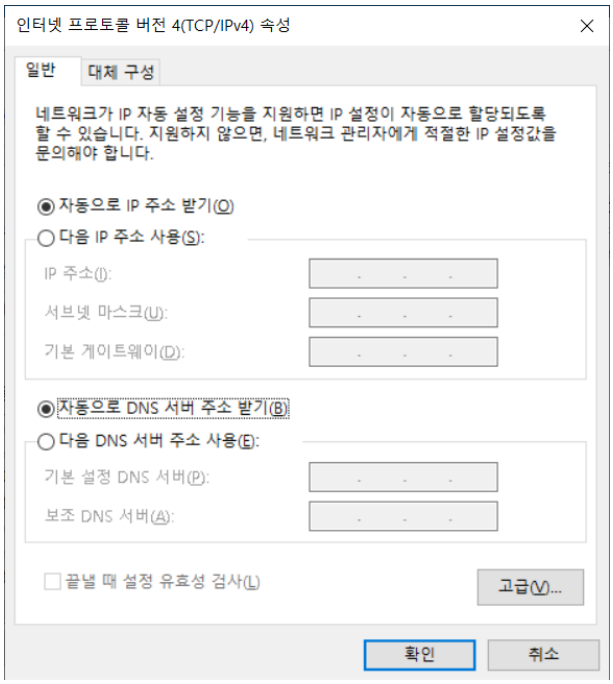

1) Select 'Internet Protocol Version 4(TCP/IPv4)' in the Ethernet Properties window and click Properties.
2) Select 'Obtain IP address automatically.
3) Select 'Obtain DNS server address automatically and click OK.

6.3 Web GUI Connect and Sign In

1) Enter '192.168.1.150/psr.html' in the Internet address window to access the Web GUI.

2) On the Web GUI screen, type "admin" in ID and P/W and click Sign In button.

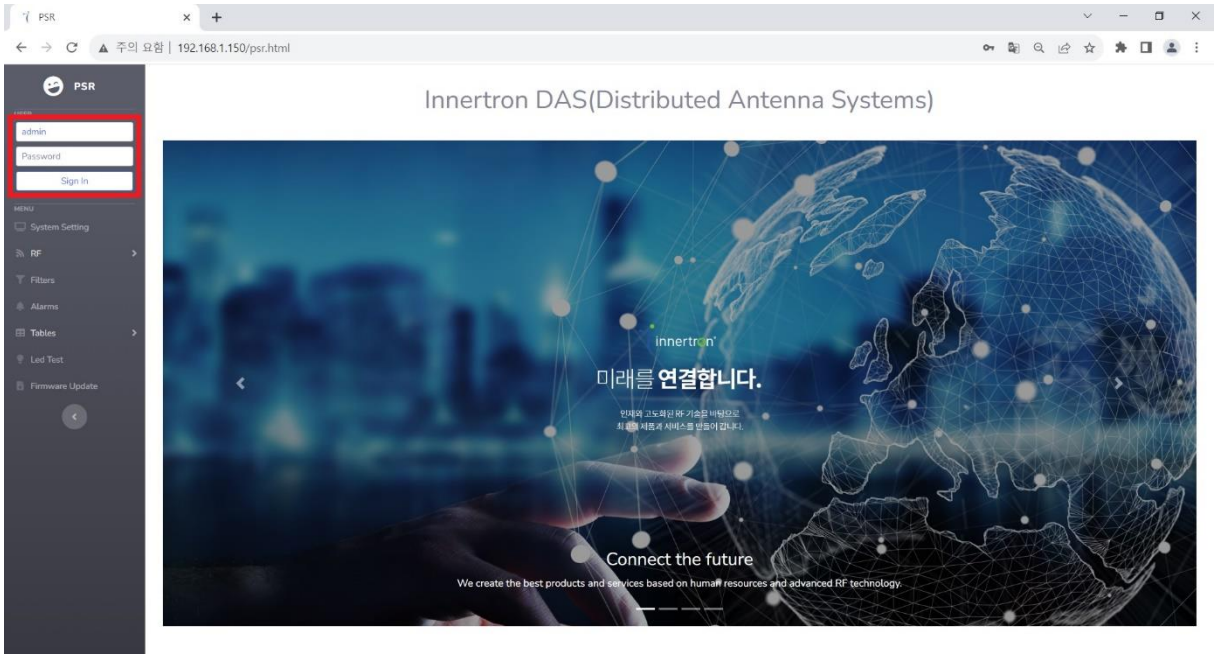

6.4 System Setting Screen

1) Can check the system information (Product, Site, Network, etc) on the system setting screen.

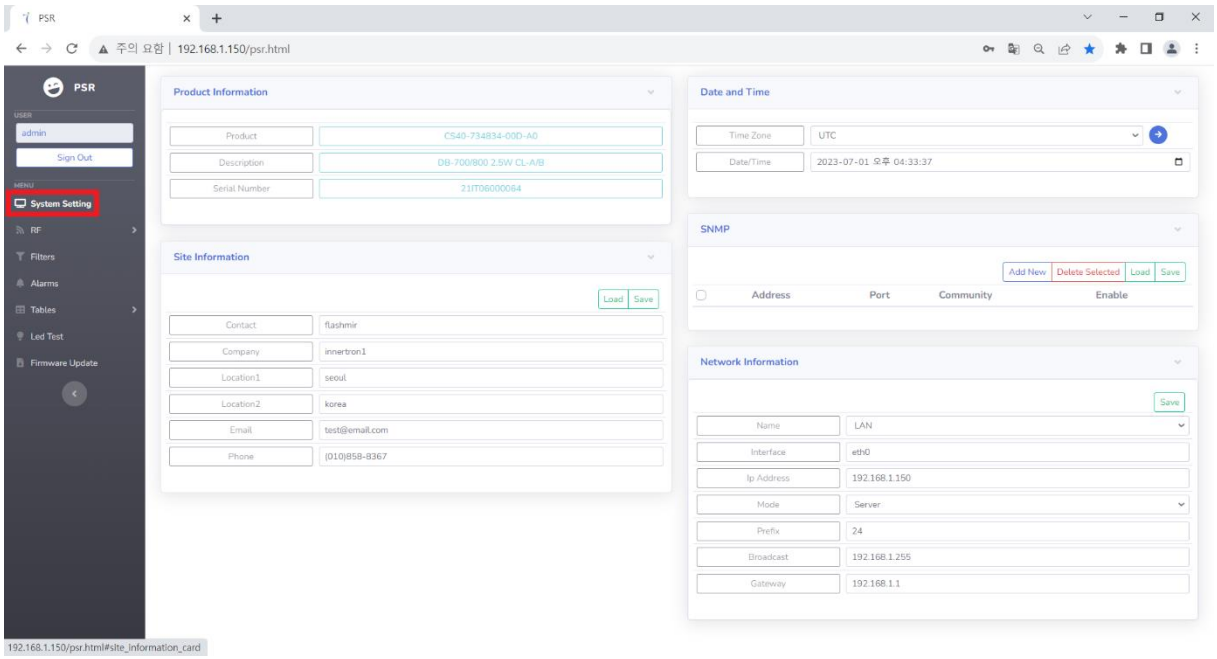

6.5 RF Configuration / General / Operation Screen

1) Can change the RF setting of the repeater on this screen.

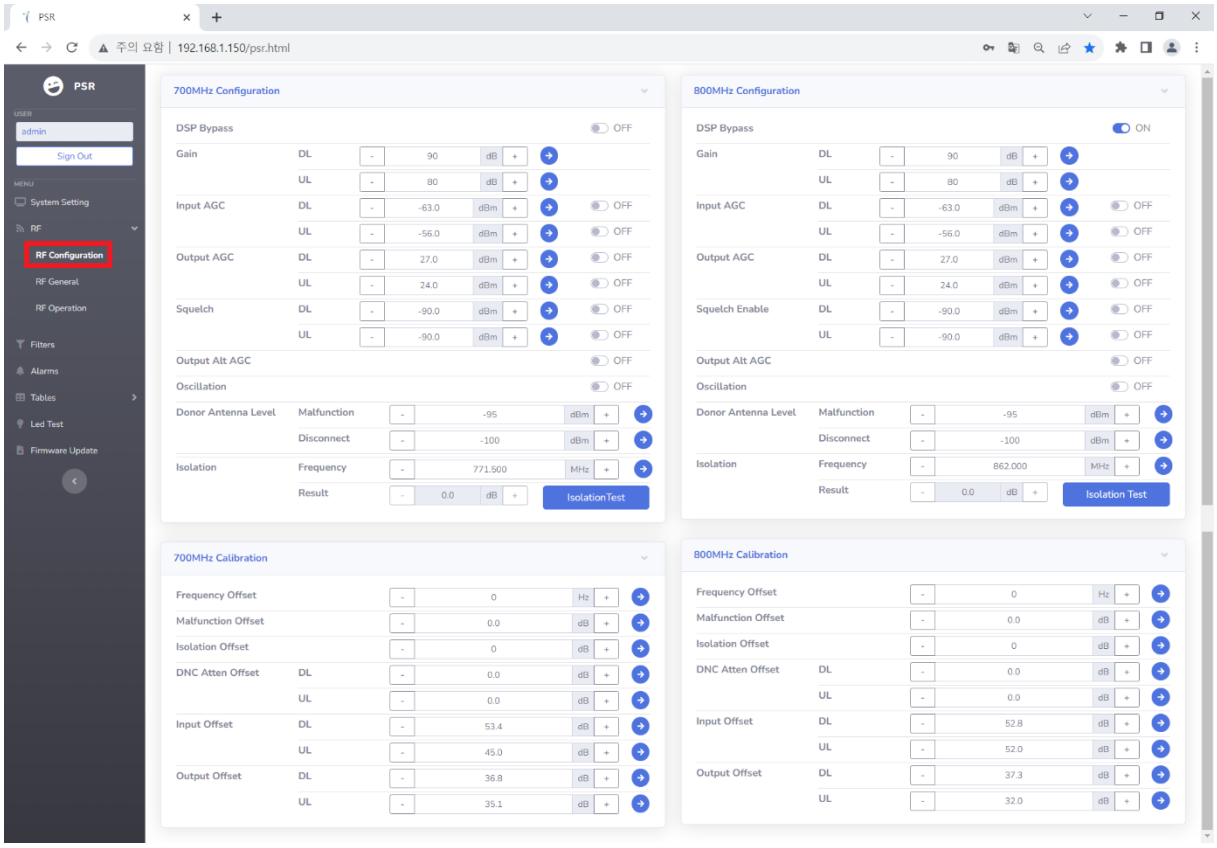

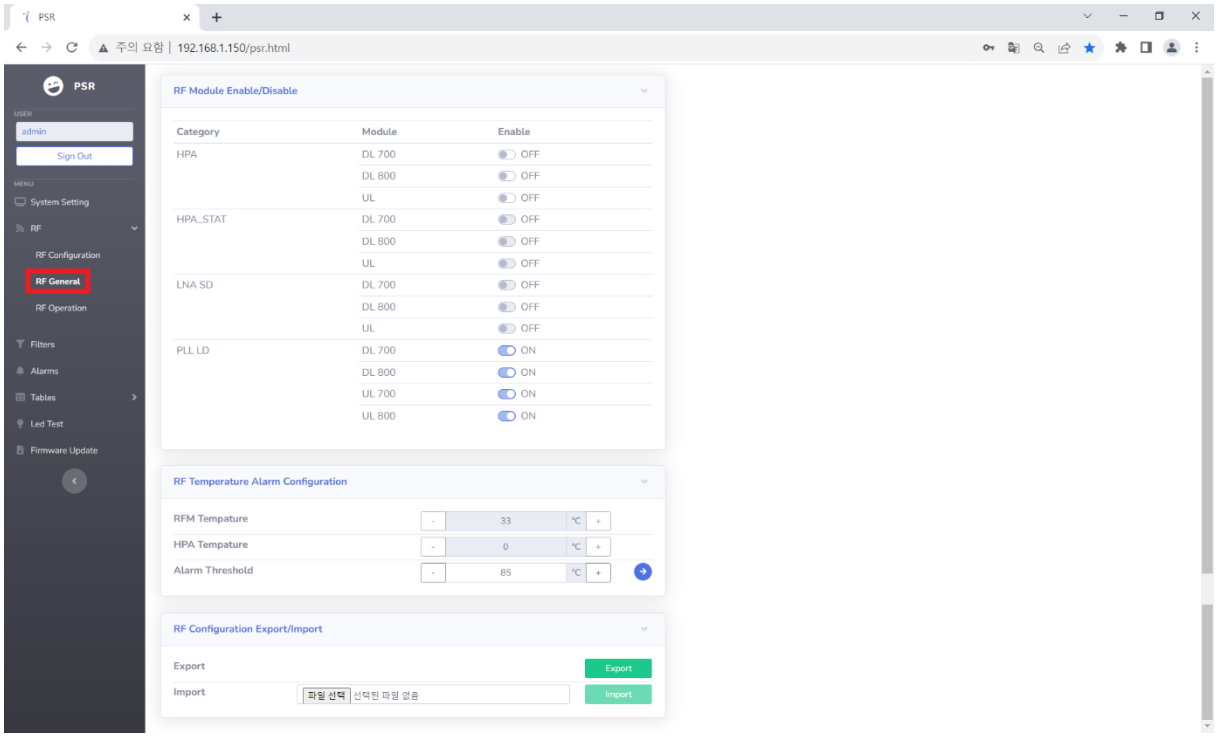

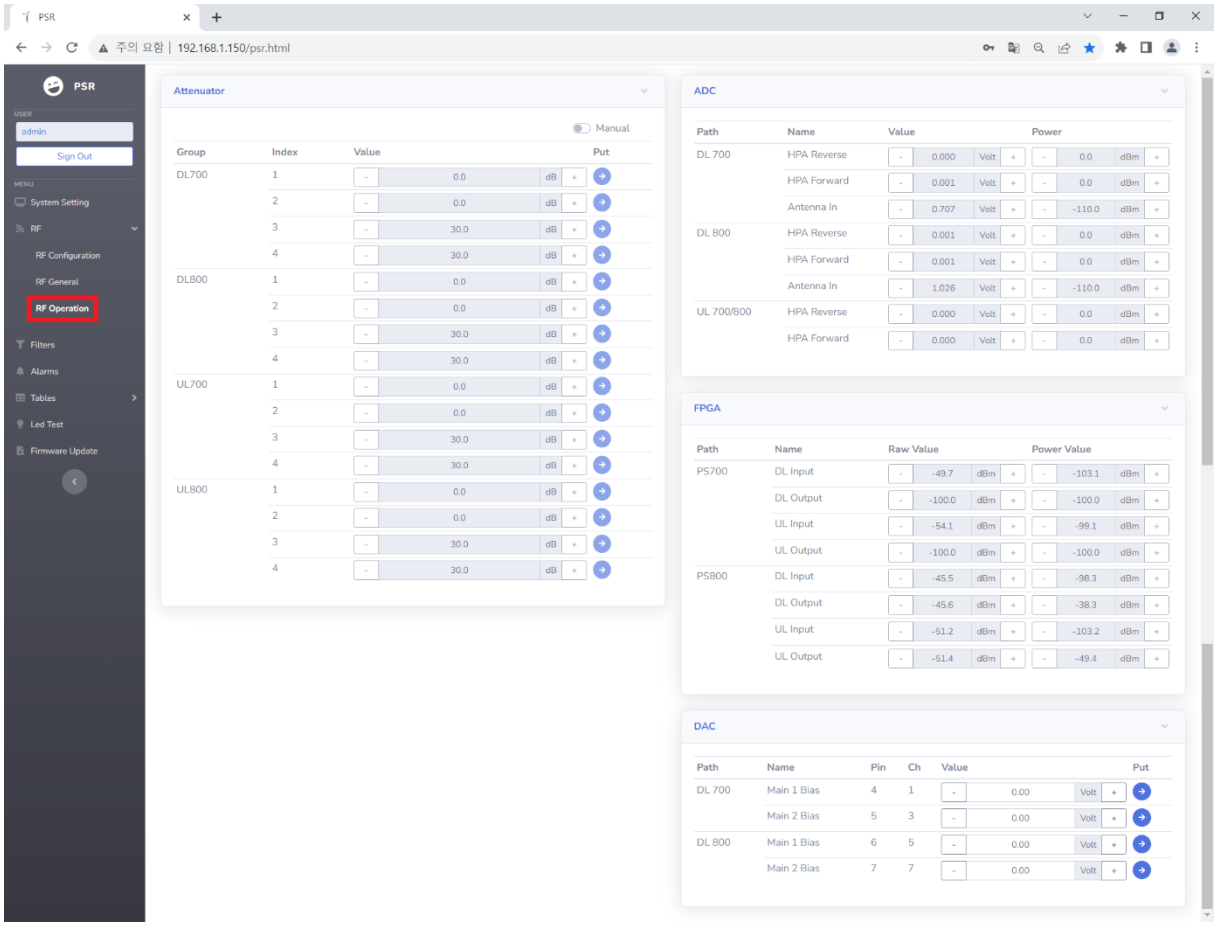

6.6 Filter Screen

1) Can set the frequency and bandwidth of the digital filter on the filter screen.

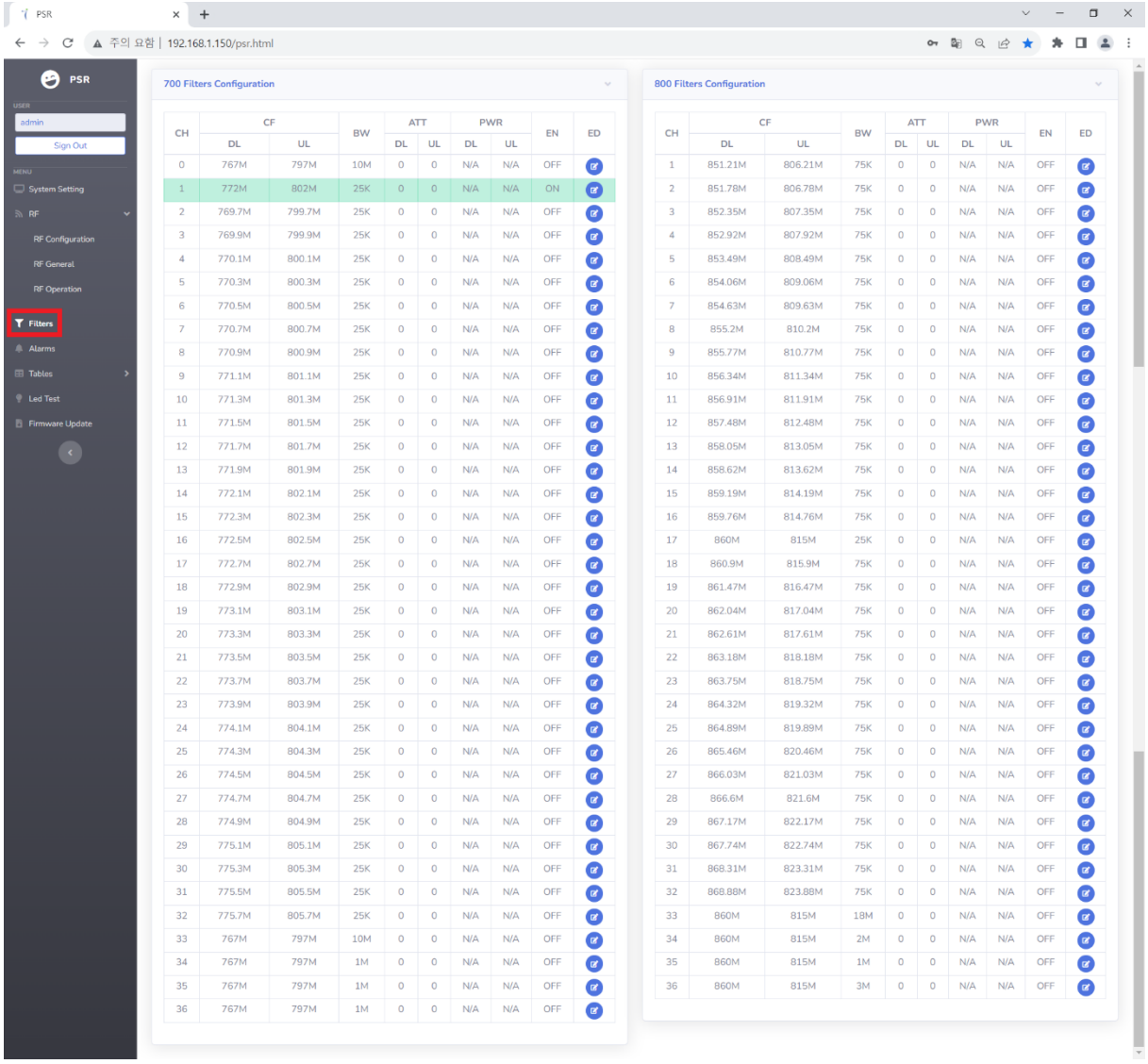

6.7 Alarm Screen

1) As a screen for checking the alarm state of the repeater, alarm mask may be set and alarm test may be performed.
2) The alarm state of the repeater may be checked in an alarm color.
   - Yellow: Any alarm detected but system operation
   - Red: Any alarm detected and system not operation

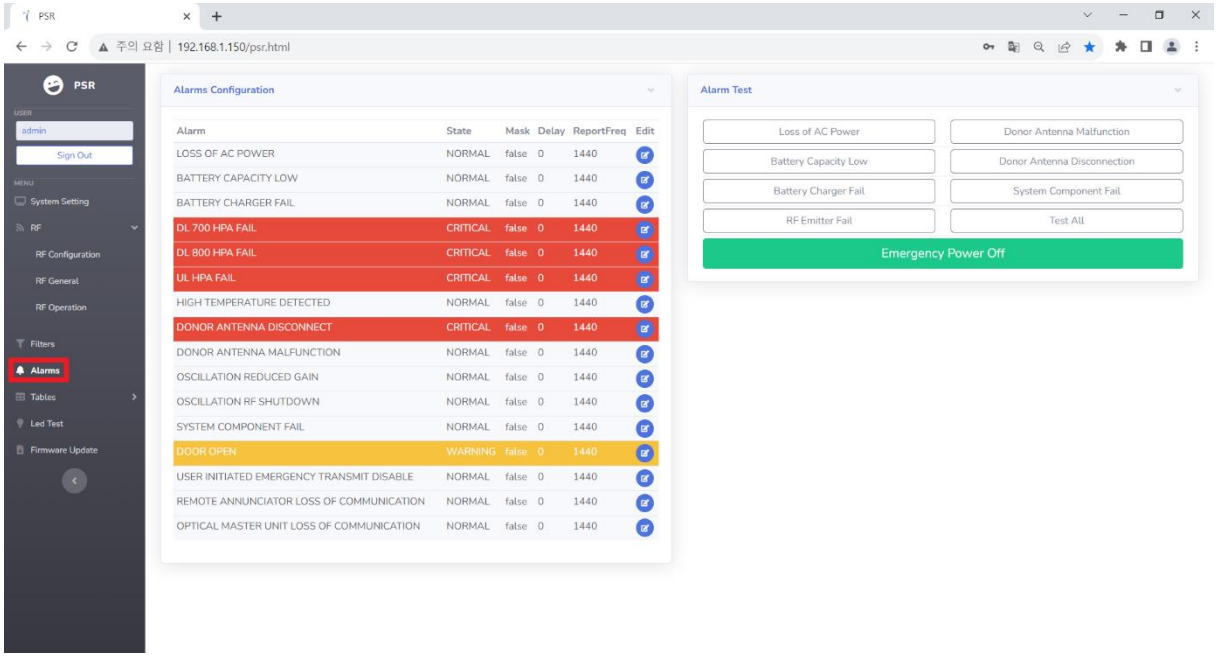

6.8 Table Screen

1) Can set various tables (Atten, Power, Temperature, Temperature PLL, DAC) on the table screen.

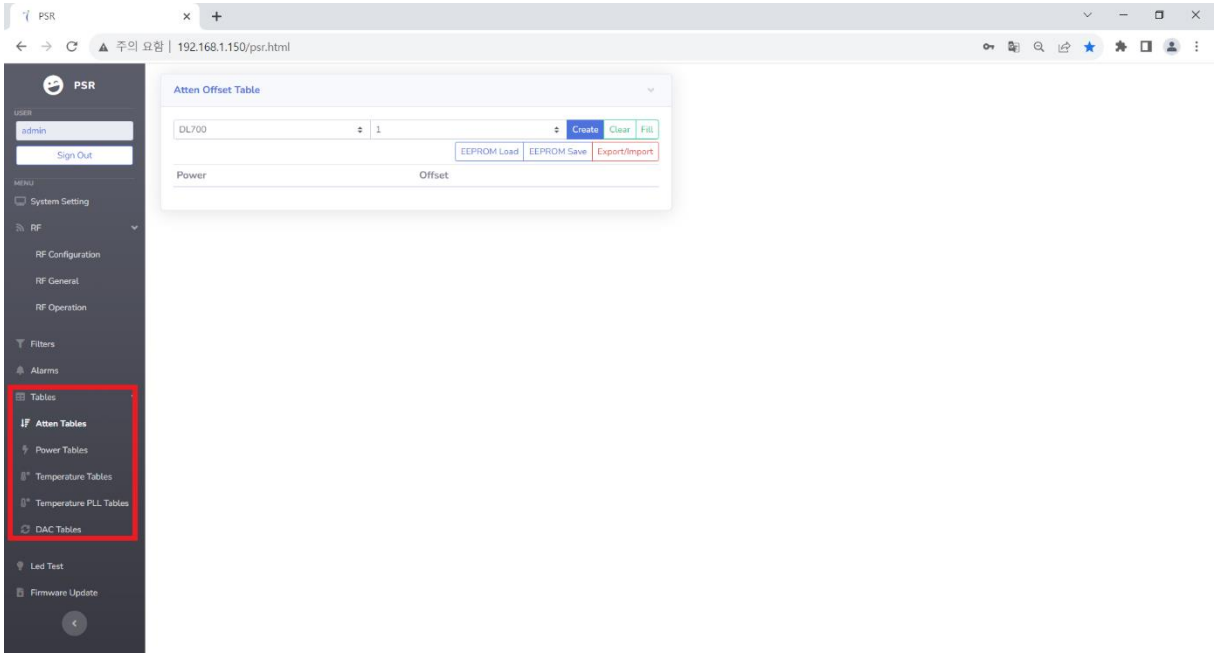

6.9 Firmware Update Screen

1) Can download the GUI, FPGA and MCU file on the firmware update screen.

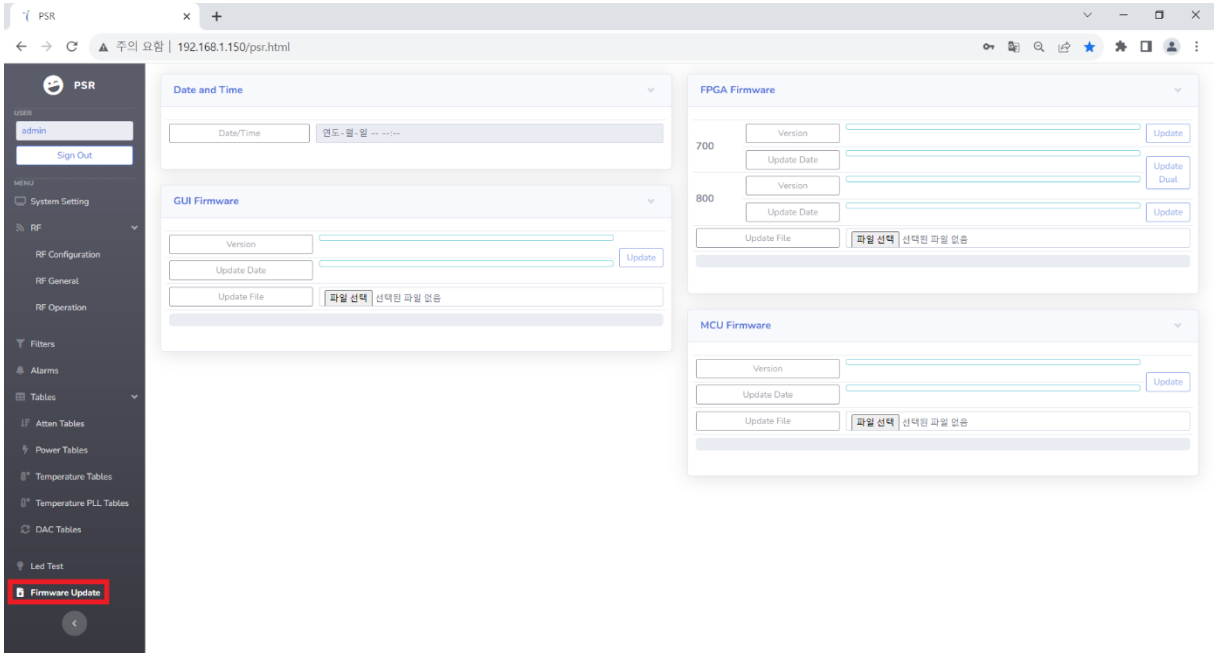
PSR
주의 요함 | 192.168.1.150/psr.html
PSR
USER
admin
Sign Out
MENU
System Setting
RF
RF Configuration
RF General
RF Operation
Filters
Alarms
Tables
Atten Tables
Power Tables
Temperature Tables
Temperature PLL Tables
DAC Tables
Led Test
Firmware Update
Date and Time
Date/Time
연도-월-일 -- --:--
GUI Firmware
Version
Update Date
Update
Update File
파일 선택
선택된 파일 없음
FPGA Firmware
700
Version
Update Date
Update
Update Dual
800
Version
Update Date
Update
Update File
파일 선택
선택된 파일 없음
MCU Firmware
Version
Update Date
Update
Update File
파일 선택
선택된 파일 없음

7. Troubleshooting

In case of abnormal operation, technician should diagnose abnormality via remote access or directly connecting to repeater using Ethernet cable. If technician is required to conduct repairs due to major alarm, repeater should first be powered off, and then technician should prepare the proper measurement equipment before trying to fix the problem. In most cases of major repairs, Innertron will simply replace the unit and conduct repairs at the appropriate facility.

7.1.1 Simple Troubleshooting Method

1) Verify SYSTEM LED State.
   - System normal : Green LED on
   - Any alarm detected - system operational : Yellow LED on
   - Any alarm detected - system not operational : Red LED on
2) Technician should check external and internal connectors to ensure that all connections are tightly secure. These connectors should be cleaned regularly.
3) If technician thinks there is a serious problem, call after sales team for over-the-phone technical support. 82-32-816-1456.

7.1.2 Troubleshooting Guide Related to System Operation

PARAMETER	CHECK POINT	TROUBLESHOOTING
Check Before System Operation	System Input Power	- Downlink : -63dBm ~ -3dBm - Uplink : -56dBm ~ +4dBm
	System Gain	- Downlink : 90dB ± 1.5dB - Uplink : 80dB ± 1.5dB
	System Output Power	- Downlink : 27dBm ± 1.5dB - Uplink : 24dBm ± 1.5dB
Check After System Operation	Check Points After Open For Service	- Verify that the antennas are securely mounted and pointed in the correct directions. - Connection status between antennas and RF cable. - Verify that the BDA is securely mounted. - DC voltage. - Grounding status of electrical circuit. - Coaxial cable(RF) construction status.

7.1.3 Troubleshooting Guide Related to Alarm State

GUI ALARM	FRONT PANEL LED	BDA ACTION	TROUBLESHOOTING
NA	AC POWER - NORMAL	SHUTDOWN	- Check power cable connection.
LOSS OF AC POWER	LOSS OF AC POWER	NONE	- NA
BATTERY CAPACITY LOW	BATTERY CAPACITY LOW	NONE	- NA
BATTERY CHARGER FAIL	BATTERY CHARGER FAIL	NONE	- NA
DL 700 HPA FAIL	RF EMITTER FAIL	700 DL RF SHUTDOWN	- Check HPA is off. - Check BDA is shutdown condition.
DL 800 HPA FAIL	RF EMITTER FAIL	800 DL RF SHUTDOWN	- Check HPA is off. - Check BDA is shutdown condition.
UL HPA FAIL	RF EMITTER FAIL	700 & 800 UL+DL RF SHUTDOWN	- Check HPA is off. - Check BDA is shutdown condition.
HIGH TEMPERATURE DETECTED	SYSTEM COMPONENT FAIL RF EMITTER FAIL	700 & 800 RF SHUTDOWN	- Check maximum temperature setting. - Check ambient temperature.
DONOR ANTENNA DISCONNECT	DONOR ANTENNA DISCONNECTION RF EMITTER FAIL	NONE	- Check antenna installation direction. - Check donor antenna and RF cable connection status.
DONOR ANTENNA MALFUNCTION	DONOR ANTENNA MALFUNCTION	NONE	- Check donor antenna installation direction. - Check donor antenna and RF cable connection status.
OSCILLATION REDUCED GAIN	SYSTEM COMPONENT FAIL	NONE	- Check the direction of the donor antenna and the service antenna.
OSCILLATION RF SHUTDOWN	SYSTEM COMPONENT FAIL RF EMITTER FAIL	700 & 800 RF SHUTDOWN	- Check the direction of the donor antenna and the service antenna.
DOOR OPEN	NA	NONE	- Check the door

7.1.4 Troubleshooting Guide Related to NMS

SYMPTOM	CHECK POINT	TROUBLESHOOTING
Link Fail	Communication Problem	- Re-connection in ethernet cable. - Verify IP address and DHCP function.

If technician thinks there is a serious problem, call after sales team for over-the-phone technical support. 82-32-816-1456.