Test Report

Product: Remote Control

Trade Mark: -

Model Number: HG4-06

FCC ID: 2BCZ2-HG4-06

Prepared for

Guangzhou Pinsheng International Trade Co., Ltd.

1809, No.3 panlong Street, Haizhu District, Guangzhou, Guangdong, China

Prepared by

Shenzhen HongBiao Certification& Testing Co., Ltd
Room 102, 201, Building 2, Yuanwanggu RFID Industrial Park, Tongguan Road, Tianliao Community, Yutang Street, Guangming District, Shenzhen, China
Tel.: +86-755-2998 9321 Fax.: +86-755-2998 5110
Website: http://www.sz-hongbiao.com

Table of Contents

1 GENERAL DESCRIPTION 5

1.1 DESCRIPTION OF EUT 5
1.2 TEST MODE 5
1.3 OPERATION CHANNEL LIST 5
1.4 TEST SETUP 6
1.5 ANCILLARY EQUIPMENT 6

2 SUMMARY OF TEST RESULT 7

3 TEST FACILITIES AND ACCREDITATIONS 8

3.1 TEST LABORATORY 8
3.2 ENVIRONMENTAL CONDITIONS 8
3.3 MEASUREMENT UNCERTAINTY 8
3.4 TEST SOFTWARE 8

4 LIST OF TEST EQUIPMENT 9

5 TEST ITEM AND RESULTS 11

5.1 ANTENNA REQUIREMENT 11
5.1.1 Standard Requirement 11
5.1.2 Test Result 11
5.2 CONDUCTED EMISSION 12
5.2.1 Limits 12
5.2.2 Test Procedures 12
5.2.3 Test Setup 13
5.2.4 Test Result 13
5.3 RADIATED EMISSION 14
5.3.1 Limits 14
5.3.2 Test Procedures 14
5.3.3 Test Setup 15
5.3.4 Test Result 16
5.3.5 Band edge–Field strength of fundamental 19
5.3.6 Band edge-radiated 21
5.4 20DB AND 99% BANDWIDTH 25
5.4.1 Limit 25
5.4.2 Test Procedure 25
5.4.3 Test Setup 25
5.4.4 Test Results 25

6 PHOTOGRAPHS OF THE TEST SETUP 27

7 PHOTOGRAPHS OF THE EUT 28

TEST RESULT CERTIFICATION

Applicant's Name..... :	Guangzhou Pinsheng International Trade Co., Ltd.
Address ..... :	1809, No.3 panlong Street, Haizhu District, Guangzhou, Guangdong, China
Manufacturer's Name ..... :	Guangzhou Pinsheng International Trade Co., Ltd.
Address ..... :	1809, No.3 panlong Street, Haizhu District, Guangzhou, Guangdong, China

Product description

Product name ..... :	Remote Control
Model Number ..... :	HG4-06
Standards..... :	FCC Part 15.249
Test procedure..... :	IEEE/ANSI C63.10-2020

This device described above has been tested by Shenzhen HongBiao Certification& Testing Co., Ltd and the test results show that the equipment under test (EUT) is in compliance with the EMC requirements. And it is applicable only to the tested sample identified in the report.

Date of Test

Date (s) of performance of tests..... :	September 22, 2029~September 28, 2023
Test Result..... :	**Pass**

Testing Engineer : Zoe Su

(Zoe Su)

Technical Manager : Gary Lu

(Gary Lu)

Authorized Signatory : Leo Su

(Leo Su)

SHENZHEN HONGBIAO CERTIFICATION&TESTING CO., LTD HONG BIAO 弘 标 认 证 APPROVAL

Revision History

Revised No.	Date of Issue	Description
01	October 07, 2023	Original

1 General Description

1.1 Description of EUT

Product name:	Remote Control
Model name:	HG4-06
Series Model:	SM549288, SM549289, SM549290, HG4-14, HG4-15
Different of series model:	The color of appearance and model name of series models listed are different from the main model, but the circuit and the electronic construction are the same, declared by the manufacturer.
Operation frequency:	2410 - 2475 MHz
Modulation type:	GFSK
Bit Rate of transmitter:	1 Mbps
Antenna type:	Integral Antenna
Antenna gain:	0dBi
Hardware version:	V1.0
Software version:	V1.0
Battery:	-
Power supply:	DC 3.0V by AA*2
Adapter information:	-

1.2 Test Mode

Test Mode	Channel	Frequency (MHz)
1	Low	2410
2	Middle	2445
3	High	2475

1.3 Operation Channel list

Channel No.	Frequency (MHz)	Channel No.	Frequency (MHz)	Channel No.	Frequency (MHz)	Channel No.	Frequency (MHz)
1	2410	18	2427	35	2444	51	2461
2	2411	19	2428	36	2445	52	2462
3	2412	20	2429	37	2446	53	2463
4	2413	21	2430	38	2447	54	2464
5	2414	22	2431	39	2448	55	2465
6	2415	23	2432	40	2449	56	2466
7	2416	24	2433	41	2450	57	2467
8	2417	25	2434	42	2451	58	2468
9	2418	26	2435	43	2452	59	2469
10	2419	27	2436	44	2453	60	2470
11	2420	28	2437	45	2454	61	2471
12	2421	29	2438	46	2455	62	2472
13	2422	30	2439	47	2456	63	2473
14	2423	31	2440	48	2457	64	2474
15	2424	32	2441	49	2458	65	2475
16	2425	33	2442	50	2459		
17	2426	34	2443	51	2460		

1.4 Test Setup

See photographs of the test setup in the report for the actual setup and connections between EUT and support equipment.

1.5 Ancillary Equipment

Equipment	Model	S/N	Manufacturer
/	/	/	/

2 Summary of Test Result

No.	Standard Section	Test Item	Result	Remark
1	FCC Part15.203	Antenna Requirement	Pass	
2	FCC Part15.207	AC power line conducted emission	N/A	
3	FCC Part15.249(d)	Radiated spurious emission	Pass	
4	FCC Part 15.215	20dB and 99% Bandwidth	Pass	

3 Test Facilities and Accreditations

3.1 Test Laboratory

Test Site	Shenzhen HongBiao Certification& Testing Co., Ltd
Test Site Location	Room 102, 201, Building 2, Yuanwanggu RFID Industrial Park, Tongguan Road, Tianliao Community, Yutang Street, Guangming District, Shenzhen, China
Telephone:	(86-755) 2998 9321
Fax:	(86-755) 2998 5110
FCC Registration No.:	CN1341
A2LA Certificate No.:	6765.01

3.2 Environmental Conditions

During the measurement the environmental conditions were within the listed ranges:

Temperature:	15ºC~35ºC
Relative Humidity:	20%~75%
Air Pressure:	98kPa~101kPa

3.3 Measurement Uncertainty

The reported uncertainty of measurement y ± U, where expended uncertainty U is based on a standard uncertainty multiplied by a coverage factor of k=2, providing a level of confidence of approximately 95 %.

Measurement Frequency Range	U，(dB)	Note
RF frequency	$2x\ 10^{-5}$	
RF power, conducted	± 0.57 dB	
Conducted emission(150kHz~30MHz)	± 2.5 dB	
Radiated emission(30MHz~1GHz)	± 4.2 dB	
Radiated emission (above 1GHz)	± 4.7 dB	
Temperature	±1 degree	
Humidity	± 5 %	

3.4 Test Software

Software name	Manufacturer	Model	Version
EMI Measurement	Farad	EZ-EMC	V1.1.4.2
Conducted test system	MWRF-test	MTS 8310	V2.0.0

4 List of Test Equipment

Radiation emission							
Item	Equipment No.	Equipment name	Manufacturer	Model	Serial No.	Calibration date	Due date
1	HB-E001	Horn Antenna	Schwarzbeck	BBHA 9120D	02592	2022-04-02	2024-04-01
2	HB-E002	Biconical log-periodic composite antenna	Schwarzbeck	VULB 9168	01340	2022-04-06	2024-04-05
3	HB-E003	SHF-EHF Horn	Schwarzbeck	BBHA 91270	01193	2022-04-02	2024-04-01
4	HB-E004	Preamplifier	Noyetec	LAN-0910	NYCM1420101	2023-05-11	2024-05-10
5	HB-E005	Preamplifier	Noyetec	LAN-0118	NYCM1420102	2023-05-12	2024-05-11
6	HB-E006	Preamplifier	Noyetec	LAN-1840	NYCM1420103	2023-06-11	2024-06-10
7	HB-E007	EMI TEST RECEIVER	R&S	ESR7	102520	2023-05-12	2024-05-11
8	HB-E009	POSITINAL COTROLLER	Noyetec	N/A	N/A	/	/
9	HB-E013	RF switch	Noyetec	NY-RF4	NY0CM1420204	/	/
10	HB-E066	Illuminance Tester	TASI	TA8121	N/A	2023-05-11	2024-05-10
11	HB-E075	Active loop antenna	Schwarzbeck	FMZB 1519B	1519B-245	2022-07-24	2024-07-23
Conduction emission							
Item	Equipment No.	Equipment name	Manufacturer	Model	Serial No.	Calibration date	Due date
1	HB-E014	4 Path V-LISN	Schwarzbeck	NNLK 8121	00770	2023-05-12	2024-05-11
2	HB-E015	Pulse Limiter	Schwarzbeck	VTSD 9561-F	00949	2023-05-12	2024-05-11
3	HB-E016	ZN23201	Noyetec	ZN23201	N/A	2023-05-11	2024-05-10
4	HB-E059	Attenuator	Xianghua	TS2-6-1	220215166	2023-05-12	2024-05-11
5	HB-E069	EMI TEST RECEIVER	R&S	ESCI	N/A	2023-05-12	2024-05-11

RF							
Item	Equipment No.	Equipment name	Manufacturer	Model	Serial No.	Calibration date	Due date
1	HB-E041	MXG Anaiog Signal Generator	Agilent	N5181A	MY47070421	2023-05-11	2024-05-10
2	HB-E042	WIDEBAND RADIO COMMUNICA	R&S	CMW500	132108	2023-05-11	2024-05-10

		TION TESTER					
3	HB-E043	MXG Anaiog Signal Generator	Agilent	N5182A	US46240335	2023-05-11	2024-05-10
4	HB-E044	Signal& spectrum Analyzer	R&S	FSV3044	101264	2023-05-11	2024-05-10
5	HB-E045	RF Control Box	Noyetec	NY100-R FCB	N/A	/	/
6	HB-E058	Thermometer Clock Humidity Monitor	N/A	HTC-1	N/A	/	/
7	HB-E077	PXA Signal Analyzer	Agilent	N9030A	N/A	2023-05-11	2024-05-10

Note: the calibration interval of the above test instruments is 12&24 months and the calibrations are traceable to international system unit (SI).

5 Test Item And Results

5.1 Antenna Requirement

5.1.1 Standard Requirement

15.203 requirement: For intentional device, according to 15.203: an intentional radiator shall be designed to ensure that no antenna other than that furnished by the responsible party shall be used with the device

5.1.2 Test Result

The antenna is an Integral antenna, which was permanently affixed to the device and un-replaced, complies with 15.203. In addition, the maximum antenna gain is 0dBi.

5.2 Conducted Emission

5.2.1 Limits

Limits – Class B		
Frequency (MHz)	Limit (dBμV)	
	Quasi-Peak	Average
0.15 to 0.5	66 to 56*	56 to 46*
0.5 to 5	56	46
5 to 30	60	50

Note:
1. the tighter limit applies at the band edges.
2. the limit of " * " marked band means the limitation decreases linearly with the logarithm of the frequency in the range.

5.2.2 Test Procedures

a) EUT Operating Conditions

The EUT was configured for testing in a typical fashion (as a customer would normally use it). The EUT has been programmed to continuously transmit during test. This operating condition was tested and used to collect the included data.

b) The following table is the setting of the receiver

Receiver Parameters	Setting
Attenuation	10 dB
Start Frequency	0.15 MHz
Stop Frequency	30 MHz
IF Bandwidth	9 kHz

c) The EUT was placed 0.8 meters from the horizontal ground plane with EUT being connected to the power mains through a line impedance stabilization network (LISN). All other support equipment powered from additional LISN(s). The LISN provide 50 Ohm/ 50uH of coupling impedance for the measuring instrument.

d) Interconnecting cables that hang closer than 40 cm to the ground plane shall be folded back and forth in the center forming a bundle 30 to 40 cm long.

e) I/O cables that are not connected to a peripheral shall be bundled in the center. The end of the cable may be terminated, if required, using the correct terminating impedance. The overall length shall not exceed 1 m.

f) LISN is at least 80 cm from nearest part of EUT chassis.

g) For the actual test configuration, please refer to the related Item – photographs of the test setup.

5.2.3 Test Setup

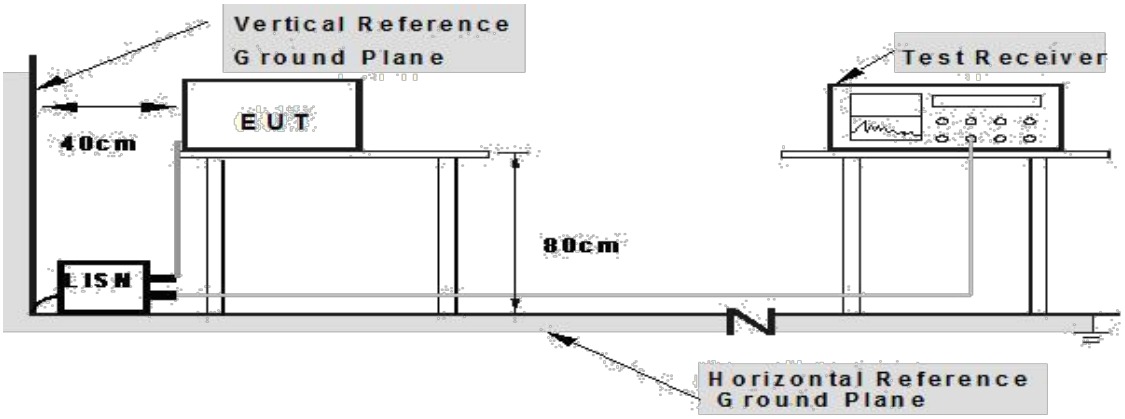

5.2.4 Test Result

Because the product is powered by AA*2, this test is not required.

5.3 Radiated Emission

5.3.1 Limits

Emissions radiated outside of the specified frequency bands, except for harmonics, shall be attenuated by at least 50 dB below the level of the fundamental or to the general radiated emission limits in §15.209, whichever is the lesser attenuation.

According to FCC section 15.209 (a), except as provided elsewhere in this subpart, the emissions from an intentional radiator shall not exceed the field strength levels specified in the following table:

Frequencies (MHz)	Field Strength (micorvolts/meter)	Measurement Distance (meters)
0.009~0.490	2400/F(KHz)	300
0.490~1.705	24000/F(KHz)	30
1.705~30.0	30	30
30~88	100	3
88~216	150	3
216~960	200	3
Above 960	500	3

Receiver Parameter	Setting
Attenuation	Auto
Start ~ Stop Frequency	9kHz~150kHz / RB 200Hz for QP
Start ~ Stop Frequency	150kHz~30MHz / RB 9kHz for QP
Start ~ Stop Frequency	30MHz~1000MHz / RB 120kHz for QP

FCC PART 15.249(a);
Except as provided in paragraph (a) of this section, the field strength of emissions from intentional radiators operated within these frequency bands shall comply with the following:

Frequency (MHz)	Field Strength of Fundamental (mV/m)	Field Strength of Harmonics (μV/m)
902-928	50	500
2400-2483.5	50	500
5725-5875	50	500

5.3.2 Test Procedures

a) The EUT is placed on a turntable, which is 0.8m above ground plane for test frequency range blew 1GHz, and 1.5m above ground plane for test frequency range above 1GHz.

b) EUT is set 3m away from the receiving antenna, which is varied from 1m to 4m to find out the highest emissions.

c) Use the following spectrum analyser settings:

1. Span = wide enough to fully capture the emission being measured

2. RBW = 1 MHz for f ≥ 1GHz, 100 kHz for f < 1 GHz
3. VBW ≥ RBW, Sweep = auto
4. Detector function = peak
5. Trace = max hold

d) Follow the guidelines in ANSI C63.4-2014 with respect to maximizing the emission by rotating the EUT, adjusting the measurement antenna height and polarization, etc. The peak reading of the emission, after being corrected by the antenna factor, cable loss, pre-amp gain, etc., is the peak field strength, submit this data. Each emission was to be maximized by changing the polarization of receiving antenna both horizontal and vertical.

e) The peak level, once corrected, must comply with the limit specified in Section 15.209. Set the RBW = 1MHz, VBW = 10Hz, Detector = PK for AV value, while maintaining all of the other instrument settings.

f) For the actual test configuration, please refer to the related item – EUT test photos.

5.3.3 Test Setup

Radiated Emission Test-Up Frequency Below 30MHz

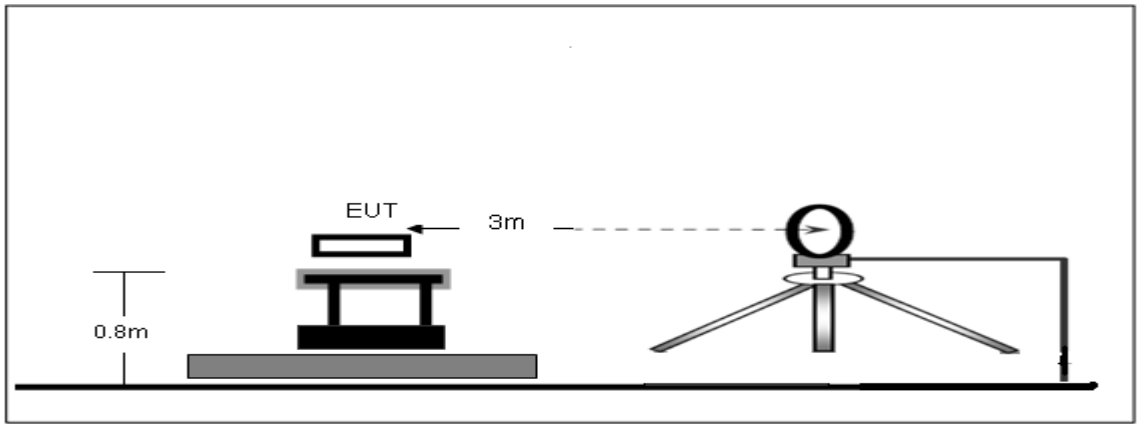

Radiated Emission Test-Up Frequency 30MHz~1GHz

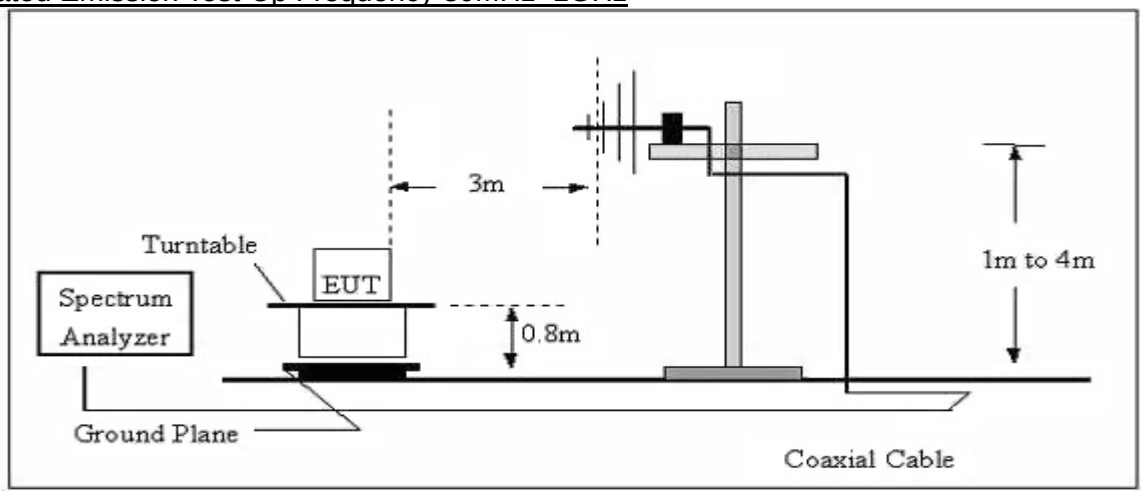

Radiated emission test-up frequency above 1GHz

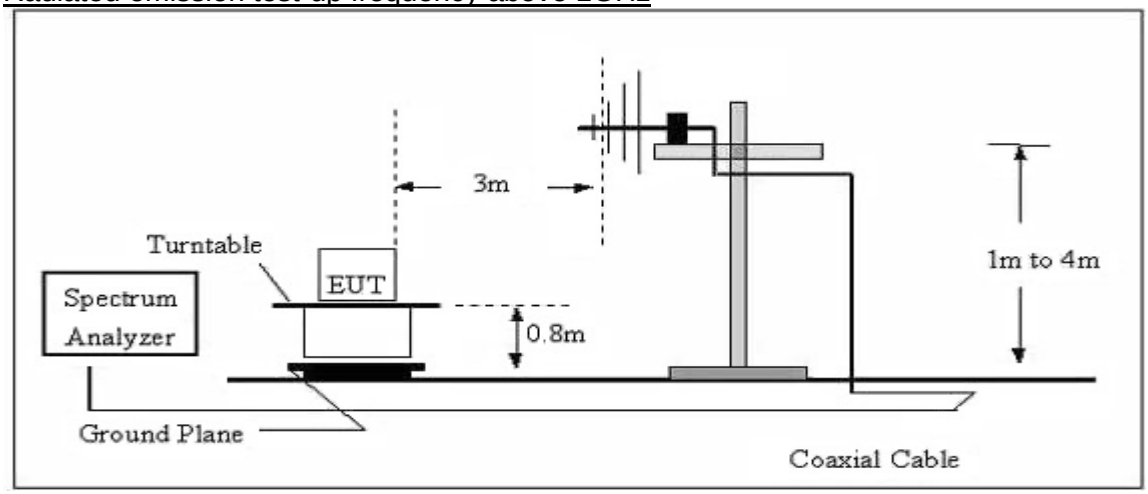

5.3.4 Test Result

Below 30MHz

EUT:	Remote Control	Model Name:	HG4-06
Pressure:	1010 hPa	Test Voltage:	DC 3.0V
Test Mode:	TX	Polarization:	--

Freq.	Reading	Limit	Margin	State
(MHz)	(dBuV/m)	(dBuV/m)	(dB)	P/F
--	--	--	--	Pass
--	--	--	--	Pass

Note:

1. For 9kHz-30MHz, the amplitude of spurious emissions which are attenuated by more than 20dB below the permissible value has no need to be reported.
2. Distance extrapolation factor =40 log (specific distance/test distance)(dB);
3. Limit line = specific limits (dBuV) + distance extrapolation factor.

Frequency range (30MHz – 1GHz)

EUT:	Remote Control	Model Name:	HG4-06
Test Mode:	TM1	Phase :	Vertical
Test Voltage:	DC 3.0V		

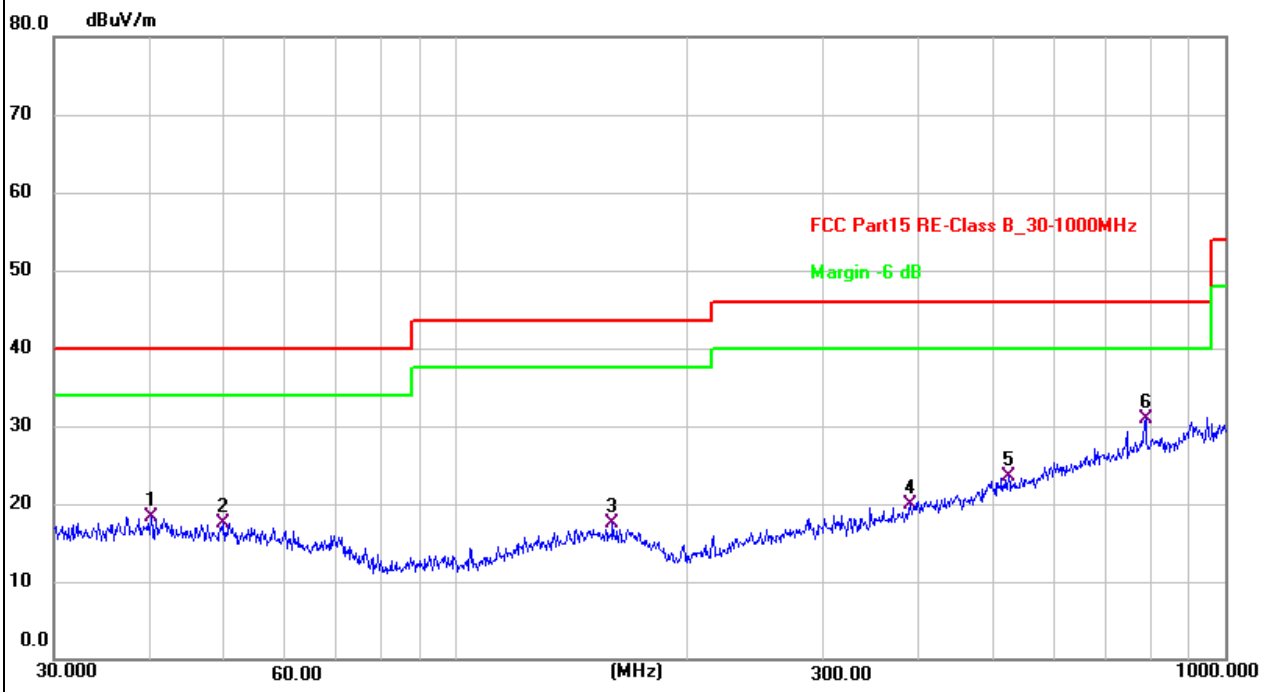

No.	Frequency (MHz)	Reading (dBuV)	Factor (dB/m)	Level (dBuV/m)	Limit (dBuV/m)	Margin (dB)	Detector	Height (cm)	Azimuth (deg.)	P/F	Remark
1	40.1347	26.47	-8.11	18.36	40.00	-21.64	QP	100	345	P	
2	49.8814	26.28	-8.76	17.52	40.00	-22.48	QP	100	105	P	
3	159.7844	26.53	-9.03	17.50	43.50	-26.00	QP	100	54	P	
4	389.3548	26.16	-6.31	19.85	46.00	-26.15	QP	100	125	P	
5	522.7180	26.67	-3.20	23.47	46.00	-22.53	QP	100	217	P	
6 *	787.8512	28.77	2.07	30.84	46.00	-15.16	QP	100	247	P	

EUT：	Remote Control	Model Name:	HG4-06
Test Mode：	TM1	Phase :	Horizontal
Test Voltage:	DC 3.0V		

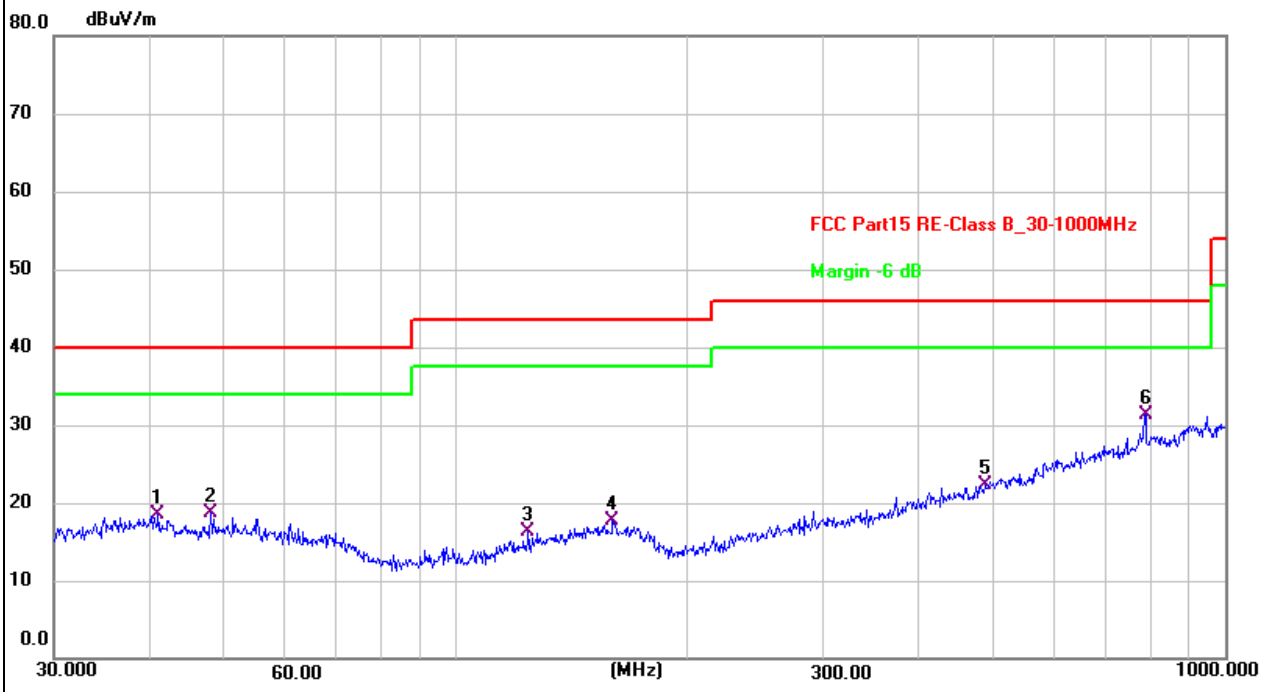

No.	Frequency (MHz)	Reading (dBuV)	Factor (dB/m)	Level (dBuV/m)	Limit (dBuV/m)	Margin (dB)	Detector	Height (cm)	Azimuth (deg.)	P/F	Remark
1	40.9881	26.92	-8.34	18.58	40.00	-21.42	QP	100	6	P	
2	47.9940	27.65	-9.02	18.63	40.00	-21.37	QP	199	353	P	
3	124.1330	26.76	-10.37	16.39	43.50	-27.11	QP	199	11	P	
4	159.7844	26.67	-9.03	17.64	43.50	-25.86	QP	100	287	P	
5	487.3151	26.22	-4.01	22.21	46.00	-23.79	QP	199	267	P	
6 *	787.8513	29.31	2.07	31.38	46.00	-14.62	QP	100	246	P	

5.3.5 Band edge–Field strength of fundamental

Frequency	Ant. Polarization	Emission level	Limits	Detector	Result
(MHz)	H / V	dBμV/m	dBμV/m		
2410	H	96.17	114	PK	PASS
2410	H	81.32	94	AV	PASS
2410	V	75.09	114	PK	PASS
2410	V	63.12	94	AV	PASS

Frequency	Ant. Polarization	Emission level	Limits	Detector	Result
(MHz)	H / V	dBμV/m	dBμV/m		
2445	H	96.25	114	PK	PASS
2445	H	81.26	94	AV	PASS
2445	V	78.13	114	PK	PASS
2445	V	65.37	94	AV	PASS

Frequency	Ant. Polarization	Emission level	Limits	Detector	Result
(MHz)	H / V	dBμV/m	dBμV/m		
2475	H	96.86	114	PK	PASS
2475	H	81.32	94	AV	PASS
2475	V	81.53	114	PK	PASS
2475	V	69.22	94	AV	PASS

1GHz-25GHz

Frequency	Read Level	Cable loss	Antenna Factor	Preamp Factor	Emission Level	Limits	Margin	Remark	Comment
(MHz)	(dBμV)	(dB)	dB/m	(dB)	(dBμV/m)	(dBμV/m)	(dB)		
Low Channel (2410 MHz)(GFSK)--Above 1G									
4820	66.27	5.21	35.59	44.30	62.77	74.00	-11.23	Pk	Vertical
4820	49.42	5.21	35.59	44.30	45.92	54.00	-8.08	AV	Vertical
7230	58.73	6.48	36.27	44.60	56.88	74.00	-17.12	Pk	Vertical
7230	43.47	6.48	36.27	44.60	41.62	54.00	-12.38	AV	Vertical
4820	67.63	5.21	35.55	44.30	64.09	74.00	-9.91	Pk	Horizontal
4820	50.80	5.21	35.55	44.30	47.26	54.00	-6.74	AV	Horizontal
7230	60.33	6.48	36.27	44.52	58.56	74.00	-15.44	Pk	Horizontal
7230	43.85	6.48	36.27	44.52	42.08	54.00	-11.92	AV	Horizontal
Mid Channel (2445 MHz)(GFSK)--Above 1G									
4890	65.67	5.21	35.66	44.20	62.34	74.00	-11.66	Pk	Vertical
4890	49.85	5.21	35.66	44.20	46.52	54.00	-7.48	AV	Vertical
7335	60.13	7.10	36.50	44.43	59.30	74.00	-14.70	Pk	Vertical
7335	43.99	7.10	36.50	44.43	43.16	54.00	-10.84	AV	Vertical
4890	64.65	5.21	35.66	44.20	61.32	74.00	-12.68	Pk	Horizontal
4890	52.16	5.21	35.66	44.20	48.83	54.00	-5.17	AV	Horizontal
7335	58.48	7.10	36.50	44.43	57.65	74.00	-16.35	Pk	Horizontal
7335	44.96	7.10	36.50	44.43	44.13	54.00	-9.87	AV	Horizontal
High Channel (2475 MHz)(GFSK)-- Above 1G									
4950	67.79	5.21	35.52	44.21	64.31	74.00	-9.69	Pk	Vertical
4950	50.28	5.21	35.52	44.21	46.80	54.00	-7.20	AV	Vertical
7425	58.06	7.10	36.53	44.60	57.09	74.00	-16.91	Pk	Vertical
7425	45.05	7.10	36.53	44.60	44.08	54.00	-9.92	AV	Vertical
4950	67.68	5.21	35.52	44.21	64.20	74.00	-9.80	Pk	Horizontal
4950	50.47	5.21	35.52	44.21	46.99	54.00	-7.01	AV	Horizontal
7425	58.61	7.10	36.53	44.60	57.64	74.00	-16.36	Pk	Horizontal
7425	45.78	7.10	36.53	44.60	44.81	54.00	-9.19	AV	Horizontal

Note:

1. All Readings are Peak Value (VBW=3MHz) and AV Value (VBW=10Hz).
2. Emission Level= Antenna Factor + Cable Loss + Read Level - Preamp Factor.

5.3.6 Band edge-radiated

All the modulation modes have been tested, and the worst result was report as below:

EUT:	Remote Control	Model Name:	HG4-06
Pressure:	1010 hPa	Polarization:	Horizontal
Test voltage:	DC 3.0V	Test Mode:	TM1

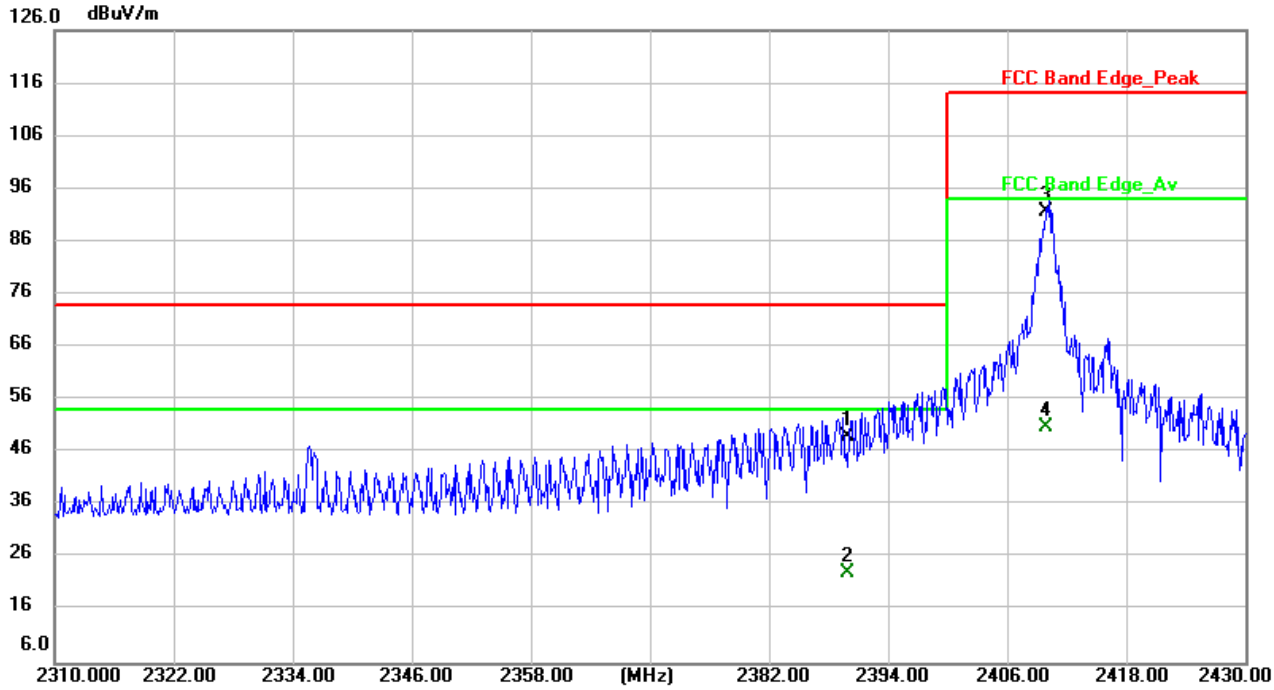

No.	Frequency (MHz)	Reading (dBuV)	Factor (dB/m)	Level (dBuV/m)	Limit (dBuV/m)	Margin (dB)	Detector	Height (cm)	Azimuth (deg.)	P/F	Remark
1	2390.000	70.10	-20.96	49.14	74.00	-24.86	peak	150	19	P	
2	2390.000	44.23	-20.96	23.27	54.00	-30.73	AVG	150	19	P	
3 *	2410.000	112.61	-20.87	91.74	114.00	-22.26	peak	150	61	P	
4	2410.000	71.81	-20.87	50.94	94.00	-43.06	AVG	150	61	P	

EUT:	Remote Control	Model Name:	HG4-06
Pressure:	1010 hPa	Polarization:	Vertical
Test voltage:	DC 3.0V	Test Mode:	TM1

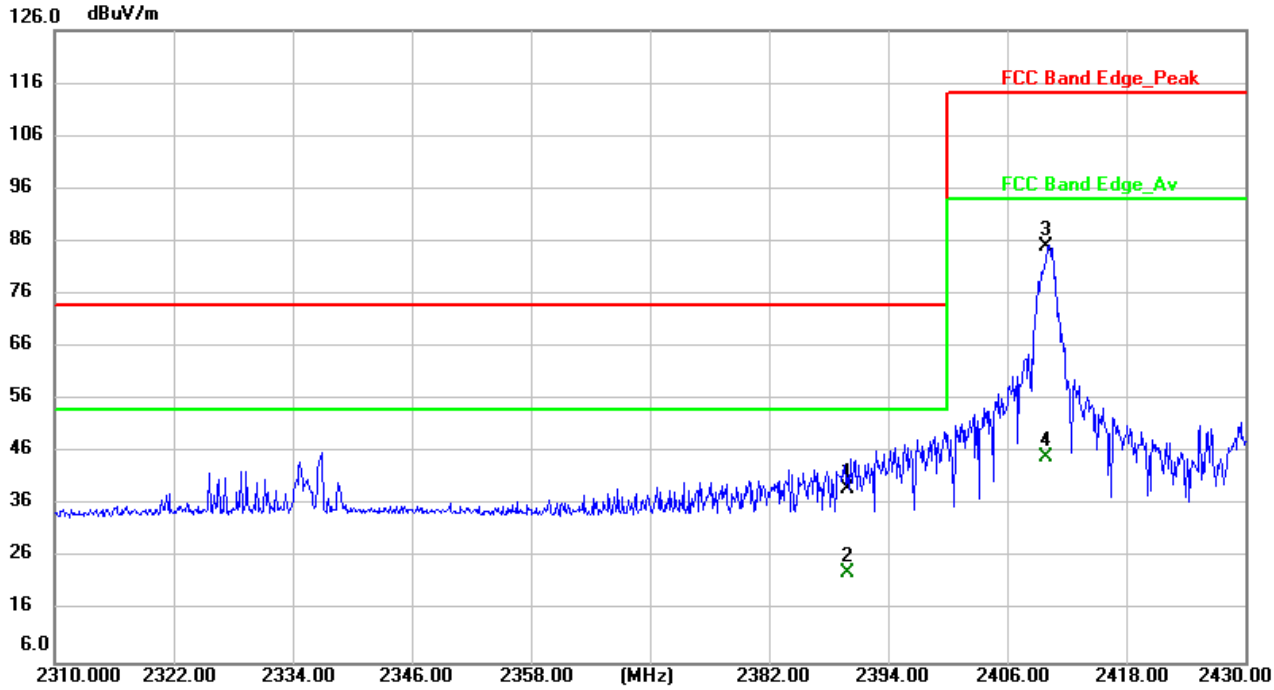

No.	Frequency (MHz)	Reading (dBuV)	Factor (dB/m)	Level (dBuV/m)	Limit (dBuV/m)	Margin (dB)	Detector	Height (cm)	Azimuth (deg.)	P/F	Remark
1	2390.000	60.03	-20.96	39.07	74.00	-34.93	peak	150	11	P	
2	2390.000	44.20	-20.96	23.24	54.00	-30.76	AVG	150	11	P	
3 *	2410.000	106.02	-20.87	85.15	114.00	-28.85	peak	150	245	P	
4	2410.000	65.93	-20.87	45.06	94.00	-48.94	AVG	150	245	P	

EUT:	Remote Control	Model Name:	HG4-06
Pressure:	1010 hPa	Polarization:	Horizontal
Test voltage:	DC 3.0V	Test Mode:	TM3

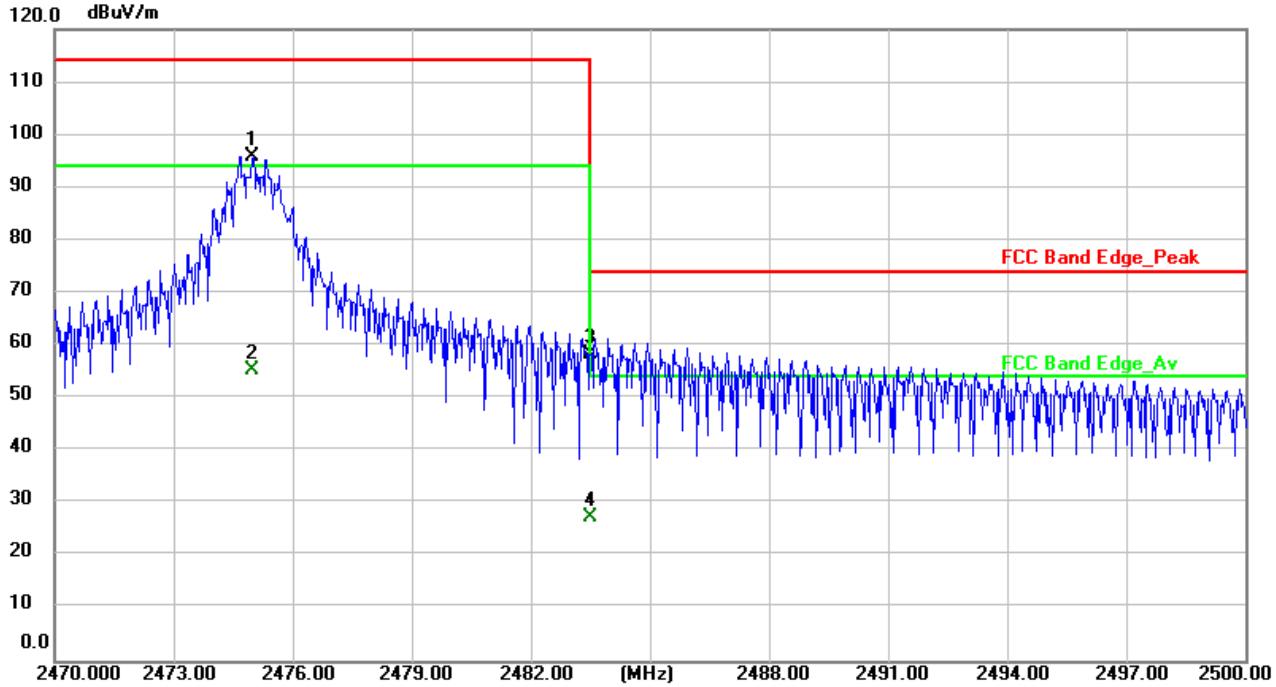

No.	Frequency (MHz)	Reading (dBuV)	Factor (dB/m)	Level (dBuV/m)	Limit (dBuV/m)	Margin (dB)	Detector	Height (cm)	Azimuth (deg.)	P/F	Remark
1	2475.000	116.42	-20.55	95.87	114.00	-18.13	peak	150	264	P	
2	2475.000	75.76	-20.55	55.21	94.00	-38.79	AVG	150	264	P	
3 *	2483.500	78.73	-20.51	58.22	74.00	-15.78	peak	150	0	P	
4	2483.500	47.82	-20.51	27.31	54.00	-26.69	AVG	150	0	P	

EUT:	Remote Control	Model Name:	HG4-06
Pressure:	1010 hPa	Polarization:	Vertical
Test voltage:	DC 3.0V	Test Mode:	TM3

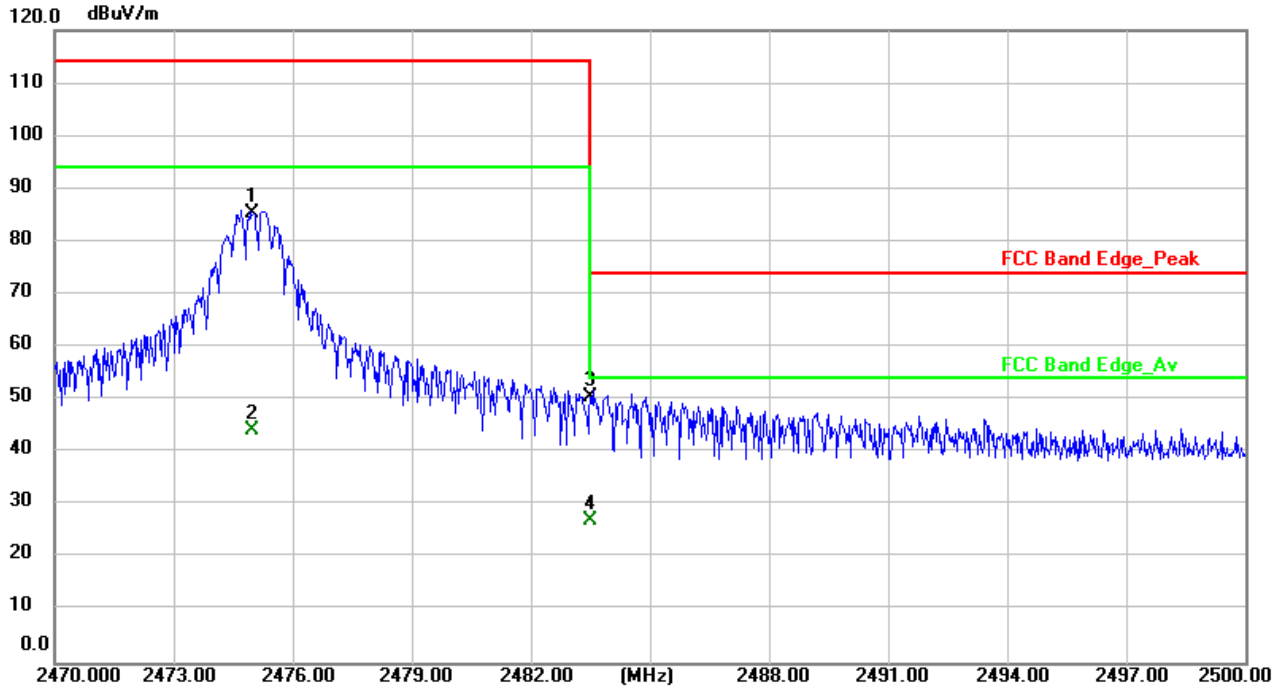

No.	Frequency (MHz)	Reading (dBuV)	Factor (dB/m)	Level (dBuV/m)	Limit (dBuV/m)	Margin (dB)	Detector	Height (cm)	Azimuth (deg.)	P/F	Remark
1	2475.000	105.98	-20.55	85.43	114.00	-28.57	peak	150	308	P	
2	2475.000	64.88	-20.55	44.33	94.00	-49.67	AVG	150	308	P	
3 *	2483.500	70.96	-20.51	50.45	74.00	-23.55	peak	150	245	P	
4	2483.500	47.77	-20.51	27.26	54.00	-26.74	AVG	150	245	P	

Note:

1. All Readings are Peak Value (VBW=3MHz) and AV Value (VBW=10Hz).
2. Emission Level= Antenna Factor + Cable Loss + Read Level - Preamp Factor.
3. All other emissions more than 20dB below the limit.

5.4 20dB and 99% Bandwidth

5.4.1 Limit

FCC §15.215(c)

Intentional radiators operating under the alternative provisions to the general emission limits, as contained in § 15.217 through 15.257 and in Subpart E of this part, must be designed to ensure that the 20 dB bandwidth of the emission, or whatever bandwidth may otherwise be specified in the specific rule section under which the equipment operates, is contained within the frequency band designated in the rule section under which the equipment is operated.

5.4.2 Test Procedure

1. Use the following spectrum analyzer settings:
2. For 20 dB bandwidth
3. Span = approximately 2 to 3 times the 20 dB bandwidth, centered on a hopping channel
4. RBW ≥1% of the 20 dB bandwidth
5. VBW ≥RBW
6. Sweep = auto
7. Detector function = peak
8. Trace = max hold
9. The EUT should be transmitting at its maximum data rate. Allow the trace to stabilize. Use the marker-to-peak function to set the marker to the peak of the emission. Use the marker-delta function to measure 20 dB down one side of the emission. Reset the marker-delta function, and move the marker to the other side of the emission, until it is (as close as possible to) even with the reference marker level. The marker-delta reading at this point is the 20 dB bandwidth and 99% occupied bandwidth of the emission

5.4.3 Test Setup

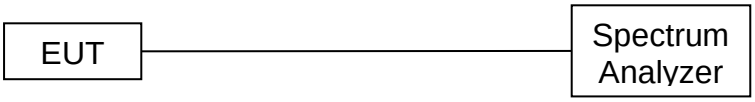

5.4.4 Test Results

Frequency (MHz)	20dB bandwidth (MHz)
2410	1.145
2445	1.140
2475	1.151

Test plots

2410

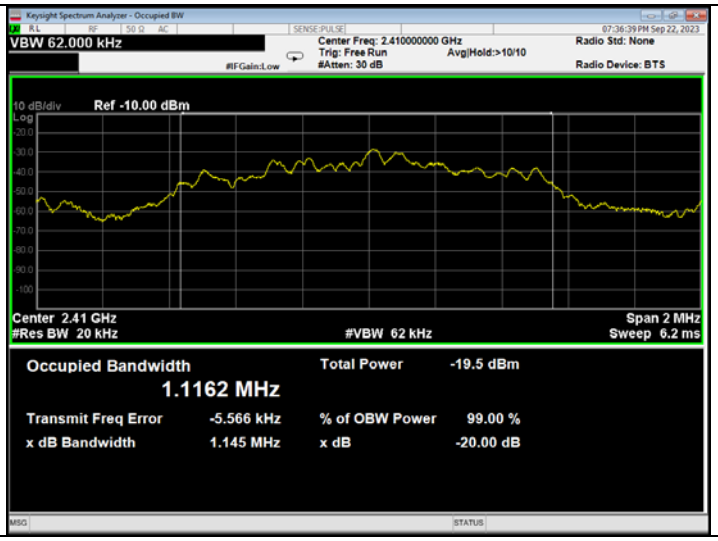

2445

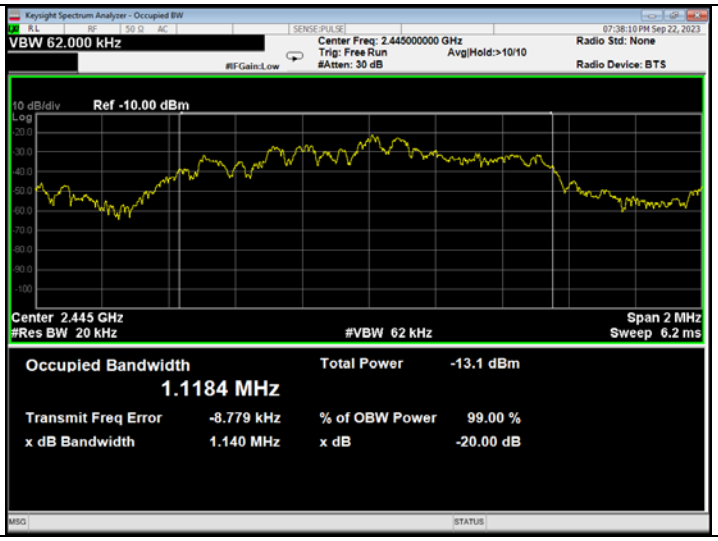

2475

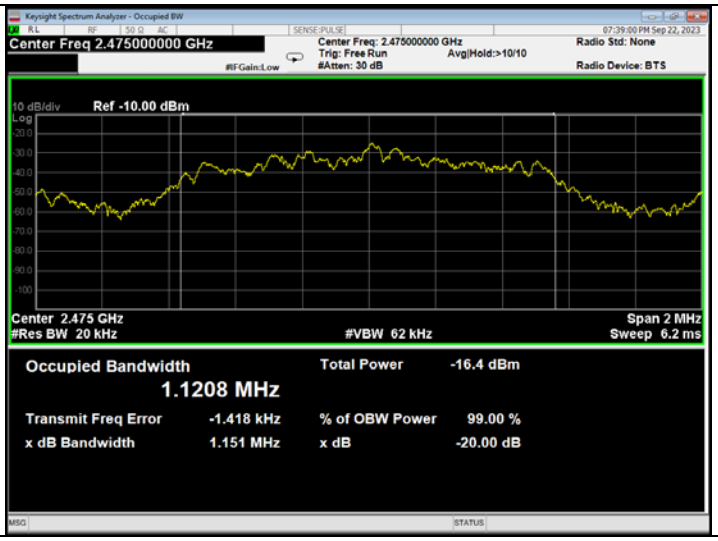

6 Photographs of the Test Setup

Reference to the appendix Test Setup Photos for details.

7 Photographs of the EUT

Reference to the appendix External Photos and Internal Photos for details.

******** END OF REPORT ********