FCC SAR Test Report

Applicant	:	**Quell Tech Ltd.**
Address	:	**Lincoln House, 1-3 Brixton Road, London, SW9 6DE, United Kingdom**
Product Name	:	**Quell Impact**
Date	:	**Nov. 23, 2023**

Shenzhen Anbotek Compliance Laboratory Limited

Contents

1. Statement of Compliance 6
2. General Information 7
2.1 Client Information 7
2.2 Description of Equipment Under Test (EUT) 7
2.3 Device Category and SAR Limits 8
2.4 Applied Standard 8
2.5 Environment of Test Site 8
2.6 Test Configuration 8
3. Specific Absorption Rate (SAR) 9
3.1 Introduction 9
3.2 SAR Definition 9
4. SAR Measurement System 10
4.1 E-Field Probe 11
4.2 Data Acquisition Electronics (DAE) 11
4.3 Robot 12
4.4 Measurement Server 13
4.5 Phantom 13
4.6 Device Holder 15
4.7 Data Storage and Evaluation 16
5. Test Equipment List 18
6. Tissue Simulating Liquids 19
7. System Verification Procedures 21
8. EUT Testing Position 23
8.1. Body Worn Position 23
9. Measurement Procedures 24
9.1 Spatial Peak SAR Evaluation 24
9.2 Power Reference Measurement 25
9.3 Area Scan Procedures 25
9.4 Zoom Scan Procedures 26
9.5 Volume Scan Procedures 27
9.6 Power Drift Monitoring 27
10. Conducted Power 28
11. Antenna Location 30
12. SAR Test Results Summary 31
13. Measurement Uncertainty 32

Appendix A. EUT Photos and Test Setup Photos.....34
Appendix B. Plots of SAR System Check.....35
Appendix C. Plots of SAR Test Data 36
Appendix D. DASY System Calibration Certificate 37

TEST REPORT

Applicant	:	Quell Tech Ltd.
Manufacturer	:	Gadget Lab international Co.,Ltd
Product Name	:	Quell Impact
Model No.	:	LeftCTR
Trade Mark	:	N/A
Rating(s)	:	Input: 5V⎓ 450mA (with DC 3.7V, 550mAh battery inside)
Test Standard(s)	**:**	**IEC/IEEE 62209-1528:2020; FCC 47 CFR Part 2.1093; ANSI/IEEE C95.1:2005; Reference FCC KDB 447498; KDB 248227;**

The device described above is tested by Shenzhen Anbotek Compliance Laboratory Limited to determine the maximum emission levels emanating from the device and the severe levels of the device can endure and its performance criterion. The measurement results are contained in this test report and Shenzhen Anbotek Compliance Laboratory Limited is assumed full of responsibility for the accuracy and completeness of these measurements. Also, this report shows that the EUT (Equipment Under Test) is technically compliant with the IEC/IEEE 62209-1528:2020, FCC 47 CFR Part 2.1093, ANSI/IEEE C95.1:2005, and Reference KDB 447498, KDB 248227 requirements.

This report applies to above tested sample only and shall not be reproduced in part without written approval of Shenzhen Anbotek Compliance Laboratory Limited.

Date of Receipt	Sept.14, 2023
Date of Test	Sept.27, 2023

Prepared By (Ella Liang)

Approved & Authorized Signer (Kingkong Jin)

Version

Version No.	Date	Description
R00	Nov. 23, 2023	Original

1. Statement of Compliance

The maximum results of Specific Absorption Rate (SAR) found during testing are as follows.

<Highest SAR Summary>

Frequency Band	Highest Reported 1g-SAR(W/Kg)	SAR Test Limit (W/Kg)
	Body-worn(0mm)	
WIFI 2.4G	0.693	1.6
Test Result	PASS	

This device is in compliance with Specific Absorption Rate (SAR) for general population/uncontrolled exposure limits (1.6 W/kg) specified in KDB 447498 D01 v06, 2015 and ANSI/IEEE C95.1:2005, and had been tested in accordance with the measurement methods and procedures specified in IEC/IEEE 62209-1528:2020.

2. General Information

2.1 Client Information

Applicant	:	Quell Tech Ltd.
Address	:	Lincoln House, 1-3 Brixton Road, London, SW9 6DE, United Kingdom
Manufacturer	:	Gadget Lab international Co.,Ltd
Address	:	Room 805, B&H Plaza, 1077 Nanhai Ave. Shekou, Shenzhen, China

2.2 Description of Equipment Under Test (EUT)

Product Name	:	Quell Impact	
Model No.	:	LeftCTR	
Trade Mark	:	N/A	
Test Power Supply	:	DC 3.7V	
Product Description	:	Operation Frequency:	BDR+EDR/ BLE: 2402~2480MHz WiFi 2.4G: 2412~2462MHz for 802.11b/g/n(HT20) 2422~2452MHz for 802.11n(HT40)
		Number of Channel:	BDR+EDR: 79 Channels BLE: 40 Channels WiFi 2.4G: 11 Channels for 802.11b/g/n(HT20) 7 channels for 802.11n(HT40)
		Modulation Type:	BT BDR+EDR: GFSK, π/4-DQPSK, 8DPSK BT BLE: GFSK WiFi 2.4G: CCK, DQPSK, DBPSK for DSSS; 64QAM, 16QAM, QPSK, BPSK for OFDM
		Antenna Type:	PCB Antenna
Remark: 1) For a more detailed features description, please refer to the manufacturer's specifications or the User's Manual.			

2.3 Device Category and SAR Limits

This device belongs to portable device category because its radiating structure is allowed to be used within 20 centimeters of the body of the user. Limit for General Population/Uncontrolled exposure should be applied for this device, it is 1.6 W/kg as averaged over any 1 gram of tissue.

2.4 Applied Standard

The Specific Absorption Rate (SAR) testing specification, method, and procedure for this device is in accordance with the following standards:

- IEC/IEEE 62209-1528:2020
- ANSI/IEEE C95.1:2005
- FCC 47 CFR Part 2.1093
- Reference FCC KDB 447498, KDB 248227

2.5 Environment of Test Site

Items	Required	Actual
Temperature (℃)	18-25	22~23
Humidity (%RH)	30-70	55~65

2.6 Test Configuration

For SAR testing, engineering testing software installed on the EUT can provide continuous transmitting RF signal.

3. Specific Absorption Rate (SAR)

3.1 Introduction

SAR is related to the rate at which energy is absorbed per unit mass in an object exposed to a radio field. The SAR distribution in a biological body is complicated and is usually carried out by experimental techniques or numerical modeling. The standard recommends limits for two tiers of groups, occupational/controlled and general population/uncontrolled, based on a person's awareness and ability to exercise control over his or her exposure. In general, occupational/controlled exposure limits are higher than the limits for general population/uncontrolled.

3.2 SAR Definition

The SAR definition is the time derivative (rate) of the incremental energy (dW) absorbed by (dissipated in) an incremental mass (dm) contained in a volume element (dv) of a given density (ρ).The equation description is as below:

$$\mathbf{SAR} = \frac{\mathbf{d}}{\mathbf{dt}}\left(\frac{\mathbf{dW}}{\mathbf{dm}}\right) = \frac{\mathbf{d}}{\mathbf{dt}}\left(\frac{\mathbf{dW}}{\boldsymbol{\rho}\mathbf{dv}}\right)$$

SAR is expressed in units of Watts per kilogram (W/kg)

SAR measurement can be either related to the temperature elevation in tissue by

$$\mathbf{SAR} = \mathbf{C}\left(\frac{\boldsymbol{\delta}\mathbf{T}}{\boldsymbol{\delta}\mathbf{t}}\right)$$

Where: C is the specific head capacity, δT is the temperature rise and δtisthe exposure duration, or related to the electrical field in the tissue by

$$\mathbf{SAR} = \frac{\boldsymbol{\sigma}|\mathbf{E}|^2}{\boldsymbol{\rho}}$$

Where: σ is the conductivity of the tissue, ρ is the mass density of the tissue and E is the RMS electrical field strength.

However for evaluating SAR of low power transmitter, electrical field measurement is typically applied.

4. SAR Measurement System

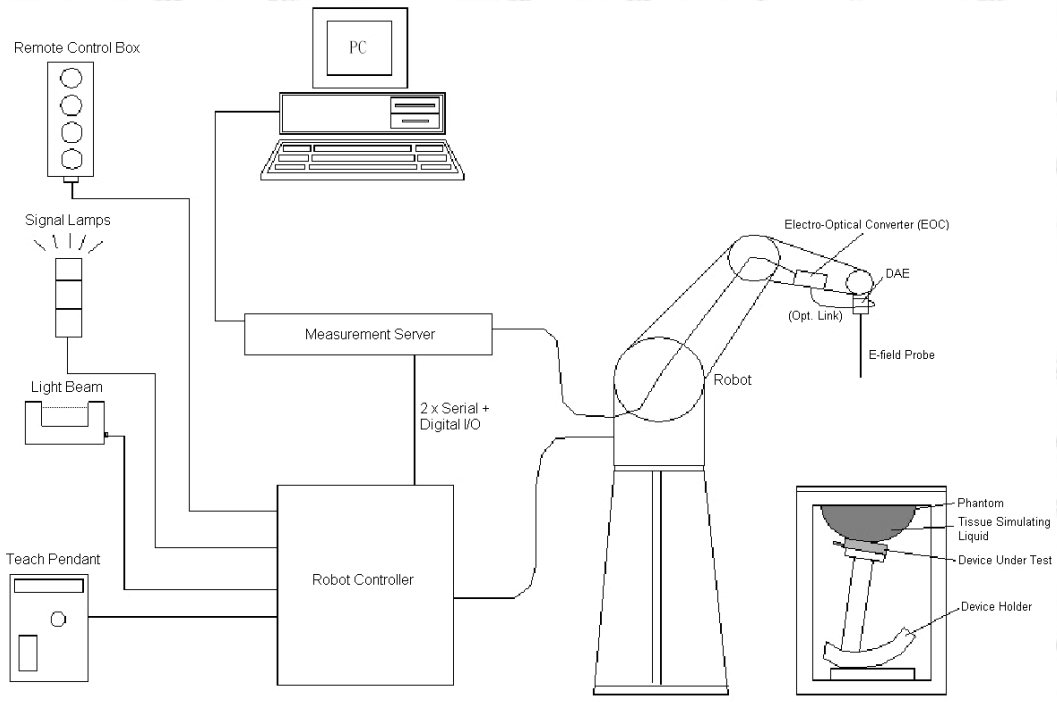

DASY System Configurations

The DASY system for performance compliance tests is illustrated above graphically. This system consists of the following items:

- A standard high precision 6-axis robot with controller, a teach pendant and software
- A data acquisition electronic (DAE) attached to the robot arm extension
- A dosimetric probe equipped with an optical surface detector system
- The electro-optical converter (EOC) performs the conversion between optical and electrical signals
- A measurement server performs the time critical tasks such as signal filtering, control of the robot operation and fast movement interrupts.
- A probe alignment unit which improves the accuracy of the probe positioning
- A computer operating Windows XP
- DASY software
- Remove control with teach pendant and additional circuitry for robot safety such as warming lamps, etc.
- The SAM twin phantom
- A device holder
- Tissue simulating liquid
- Dipole for evaluating the proper functioning of the system

components are described in details in the following sub-sections.

4.1 E-Field Probe

The SAR measurement is conducted with the dosimetric probe (manufactured by SPEAG).The probe is specially designed and calibrated for use in liquid with high permittivity. The dosimetric probe has special calibration in liquid at different frequency. This probe has a built in optical surface detection system to prevent from collision with phantom.

- **E-Field Probe Specification**

<EX3DV4 Probe>

Construction	Symmetrical design with triangular core Built-in shielding against static charges PEEK enclosure material (resistant to organic solvents, e.g., DGBE)	 **Photo of EX3DV4**
Frequency	10 MHz to 6 GHz; Linearity: ± 0.2 dB	
Directivity	± 0.3 dB in HSL (rotation around probe axis) ± 0.5 dB in tissue material (rotation normal to probe axis)	
Dynamic Range	10 µW/g to 100 mW/g; Linearity: ± 0.2 dB (noise: typically < 1 µW/g)	
Dimensions	Overall length: 330 mm (Tip: 20 mm) Tip diameter: 2.5 mm (Body: 12 mm) Typical distance from probe tip to dipole centers: 1 mm	

- **E-Field Probe Calibration**

Each probe needs to be calibrated according to a dosimetric assessment procedure with accuracy better than ± 10%. The spherical isotropy shall be evaluated and within ± 0.25dB. The sensitivity parameters (NormX, NormY, and NormZ), the diode compression parameter (DCP) and the conversion factor (ConvF) of the probe are tested. The calibration data can be referred to appendix C of this report.

4.2 Data Acquisition Electronics (DAE)

The data acquisition electronics (DAE) consists of a highly sensitive electrometer-grade preamplifier with auto-zeroing, a channel and gain-switching multiplexer, a fast 16 bit AD-converter and a command decoder and control logic unit. Transmission to the measurement server is accomplished through an optical downlink for data and status information as well as an optical uplink for commands and the clock.

The input impedance of the DAE is 200MOhm; the inputs are symmetrical and floating. Common mode rejection is above 80dB.

Photo of DAE

4. 3 Robot

The SPEAG DASY system uses the high precision robots (DASY5: TX60XL) type from Stäubli SA (France). For the 6-axis controller system, the robot controller version (DASY5: CS8c) from Stäubli is used. The Stäubli robot series have many features that are important for our application:

- High precision (repeatability ±0.035 mm)
- High reliability (industrial design)
- Jerk-free straight movements
- Low ELF interference (the closed metallic construction shields against motor control fields)

Photo of DASY5

4.4 Measurement Server

The measurement server is based on a PC/104 CPU board with CPU (DASY5: 400 MHz, Intel Celeron), chip disk (DASY5: 128 MB), RAM (DASY5: 128 MB). The necessary circuits for communication with the DAE electronic box, as well as the 16 bit AD converter system for optical detection and digital I/O interface are contained on the DASY I/O board, which is directly connected to the PC/104 bus of the CPU board.

The measurement server performs all the real-time data evaluation for field measurements and surface detection, controls robot movements and handles safety operations.

Photo of Server for DASY5

4.5 Phantom

<SAM Twin Phantom>

Shell Thickness	2 ± 0.2 mm; Center ear point: 6 ± 0.2 mm	 **Photo of SAM Phantom**
Filling Volume	Approx. 25 liters	
Dimensions	Length: 1000 mm; Width: 500 mm; Height: adjustable feet	
Measurement Areas	Left Hand, Right Hand, Flat Phantom	

The bottom plate contains three pair of bolts for locking the device holder. The device holder positions are adjusted to the standard measurement positions in the three sections. A white cover is provided to tap the phantom during off-periods to prevent water evaporation and changes in the liquid parameters. On the phantom top, three reference markers are provided to identify the phantom position with respect to the robot.

<ELI4 Phantom>

Shell Thickness	2 ± 0.2 mm (sagging: <1%)	**Photo of ELI4 Phantom**
Filling Volume	Approx. 30 liters	
Dimensions	Major ellipse axis: 600 mm Minor axis:400 mm	

The ELI4 phantom is intended for compliance testing of handheld and body-mounted wireless devices in the frequency range of 30 MHz to 6 GHz. ELI4 is fully compatible with standard and all known tissue simulating liquids.

4. 6 Device Holder

The SAR in the phantom is approximately inversely proportional to the square of the distance between the source and the liquid surface. For a source at 5 mm distance, a positioning uncertainty of ±0.5mm would produce a SAR uncertainty of ± 20%. Accurate device positioning is therefore crucial for accurate and repeatable measurements. The positions in which the devices must be measured are defined by the standards.

The DASY device holder is designed to cope with different positions given in the standard. It has two scales for the device rotation (with respect to the body axis) and the device inclination (with respect to the line between the ear reference points). The rotation center for both scales is the ear reference point (ERP).Thus the device needs no repositioning when changing the angles.

The DASY device holder is constructed of low-loss POM material having the following dielectric parameters: relative permittivity ε = 3 and loss tangent δ = 0.02. The amount of dielectric material has been reduced in the closest vicinity of the device, since measurements have suggested that the influence of the clamp on the test results could thus be lowered.

Device Holder

4.7 Data Storage and Evaluation

- Data Storage

The DASY software stores the assessed data from the data acquisition electronics as raw data (in microvolt readings from the probe sensors), together with all the necessary software parameters for the data evaluation (probe calibration data, liquid parameters and device frequency and modulation data) in measurement files. The post-processing software evaluates the desired unit and format for output each time the data is visualized or exported. This allows verification of the complete software setup even after the measurement and allows correction of erroneous parameter settings. For example, if a measurement has been performed with an incorrect crest factor parameter in the device setup, the parameter can be corrected afterwards and the data can be reevaluated.

The measured data can be visualized or exported in different units or formats, depending on the selected probe type (e.g., [V/m], [A/m], [mW/g]). Some of these units are not available in certain situations or give meaningless results, e.g., a SAR-output in a non-lose media, will always be zero. Raw data can also be exported to perform the evaluation with other software packages.

- Data Evaluation

The DASY post-processing software (SEMCAD) automatically executes the following procedures to calculate the field units from the microvolt readings at the probe connector. The parameters used in the evaluation are stored in the configuration modules of the software：

Probe parameters：	- Sensitivity	$Norm_i$, a_{i0}, a_{i1}, a_{i2}
	- Conversion factor	$ConvF_i$
	- Diode compression point	dcp_i
Device parameters：	- Frequency	f
	- Crest factor	cf
Media parameters：	- Conductivity	σ
	- Density	ρ

These parameters must be set correctly in the software. They can be found in the component documents or they can be imported into the software from the configuration files issued for the DASY components. In the direct measuring mode of the multi-meter option, the parameters of the actual system setup are used. In the scan visualization and export modes, the parameters stored in the corresponding document files are used.

The first step of the evaluation is a linearization of the filtered input signal to account for the compression characteristics of the detector diode. The compensation depends on the input signal, the diode type and the DC-transmission factor from the diode to the evaluation electronics. If the exciting field is pulsed, the crest factor of the signal must be known to correctly

compensate for peak power.

The formula for each channel can be given as:

$$\mathbf{V_i = U_i + U_i^2 \cdot \frac{cf}{dcp_i}}$$

with V_i= compensated signal of channel i, (i = x, y, z)

U_i = input signal of channel i, (i = x, y, z)

cf = crest factor of exciting field (DASY parameter)

dcp_i = diode compression point (DASY parameter)

From the compensated input signals, the primary field data for each channel can be evaluated:

E-field Probes: $\mathbf{E_i = \sqrt{\frac{V_i}{Norm_i \cdot ConvF}}}$

H-field Probes: $\mathbf{H_i = \sqrt{V_i} \cdot \frac{a_{i0}+a_{i1}f+a_{i2}f^2}{f}}$

with V_i = compensated signal of channel i,(i = x, y, z)

$Norm_i$= sensor sensitivity of channel i, (i = x, y, z), μV/(V/m)^2 for E-field Probes

ConvF= sensitivity enhancement in solution

a_{ij}= sensor sensitivity factors for H-field probes

f = carrier frequency [GHz]

E_i= electric field strength of channel i in V/m

H_i= magnetic field strength of channel i in A/m

The RSS value of the field components gives the total field strength (Hermitian magnitude):

$$\mathbf{E_{tot} = \sqrt{E_x^2 + E_y^2 + E_z^2}}$$

The primary field data are used to calculate the derived field units.

$$\mathbf{SAR = E_{tot}^2 \cdot \frac{\sigma}{\rho \cdot 1000}}$$

with SAR = local specific absorption rate in mW/g

E_{tot}= total field strength in V/m

σ = conductivity in [mho/m] or [Siemens/m]

ρ = equivalent tissue density in g/cm^3

Note that the density is set to 1, to account for actual head tissue density rather than the density of the tissue simulating liquid.

5. Test Equipment List

Manufacturer	Name of Equipment	Type/Model	Serial Number	Calibration	
				Last Cal.	Due Date
SPEAG	2450MHz System Validation Kit	D2450V2	910	Jun. 15,2021	Jun. 14,2024
SPEAG	Data Acquisition Electronics	DAE4	387	Sept.06,2023	Sept.05,2024
SPEAG	Dosimetric E-Field Probe	EX3DV4	7396	May 06,2023	May 05,2024
Agilent	ENA Series Network Analyzer	E5071C	MY46317418	Oct.26, 2022	Oct.25, 2023
SPEAG	DAK	DAK-3.5	1226	NCR	NCR
SPEAG	ELI Phantom	QDOVA004AA	2058	NCR	NCR
AR	Amplifier	ZHL-42W	QA1118004	NCR	NCR
Agilent	Power Meter	N1914A	MY50001102	Oct.26, 2022	Oct.25, 2023
Agilent	Power Sensor	N8481H	MY51240001	Oct.26, 2022	Oct.25, 2023
R&S	Spectrum Analyzer	N9020A	MY51170037	Oct.26, 2022	Oct.25, 2023
Agilent	Signal Generation	N5182A	MY48180656	Oct.26, 2022	Oct.25, 2023
Worken	Directional Coupler	0110A05601O-10	COM5BNW1A2	Oct.26, 2022	Oct.25, 2023

Note:

1. The calibration certificate of DASY can be referred to appendix C of this report.
2. The dipole calibration interval can be extended to 3 years with justification. The dipoles are also not physically damaged, or repaired during the interval.
3. The Insertion Loss calibration of Dual Directional Coupler and Attenuator were characterized via the network analyzer and compensated during system check.
4. The dielectric probe kit was calibrated via the network analyzer, with the specified procedure (calibrated in pure water) and calibration kit (standard) short circuit, before the dielectric measurement. The specific procedure and calibration kit are provided by Agilent.
5. In system check we need to monitor the level on the power meter, and adjust the power amplifier level to have precise power level to the dipole; the measured SAR will be normalized to 1W input power according to the ratio of 1W to the input power to the dipole. For system check, the calibration of the power amplifier is deemed not critically required for correct measurement; the power meter is critical and we do have calibration for it

6. Tissue Simulating Liquids

For the measurement of the field distribution inside the SAM phantom with DASY, the phantom must be filled with around 25 liters of homogeneous body tissue simulating liquid. For head SAR testing, the liquid height from the ear reference point (ERP) of the phantom to the liquid top surface is larger than 15 cm, which is shown in Fig. 6.1. For body SAR testing, the liquid height from the center of the flat phantom to the liquid top surface is larger than 15 cm, which is shown as followed:

Photo of Liquid Height for Body SAR

The following table gives the recipes for tissue simulating liquid.

Frequency (MHz)	Water (%)	Sugar (%)	Cellulose (%)	Salt (%)	Preventol (%)	DGBE (%)	Conductivity (σ)	Permittivity (εr)
For Body								
2450	68.6	0	0	0	31.4	0	1.95	52.7

The following table shows the measuring results for simulating liquid.

Tissue Type	Measured Frequency (MHz)	Target Tissue		Measured Tissue				Liquid Temp.(℃)	Test Date
		ε_r	σ	ε_r	Dev. (%)	σ	Dev. (%)		
2450MSL	2450	52.7	1.95	51.88	-1.58	1.88	-3.72	22.5	09/25/2023

7. System Verification Procedures

Each DASY system is equipped with one or more system validation kits. These units, together with the predefined measurement procedures within the DASY software, enable the user to conduct the system performance check and system validation. System validation kit includes a dipole, tripod holder to fix it underneath the flat phantom and a corresponding distance holder.

- **Purpose of System Performance check**

  The system performance check verifies that the system operates within its specifications. System and operator errors can be detected and corrected. It is recommended that the system performance check be performed prior to any usage of the system in order to guarantee reproducible results. The system performance check uses normal SAR measurements in a simplified setup with a well characterized source. This setup was selected to give a high sensitivity to all parameters that might fail or vary over time. The system check does not intend to replace the calibration of the components, but indicates situations where the system uncertainty is exceeded due to drift or failure.

- **System Setup**

  In the simplified setup for system evaluation, the EUT is replaced by a calibrated dipole and the power source is replaced by a continuous wave that comes from a signal generator. The calibrated dipole must be placed beneath the flat phantom section of the SAM twin phantom with the correct distance holder. The distance holder should touch the phantom surface with a light pressure at the reference marking and be oriented parallel to the long side of the phantom. The equipment setup is shown below:

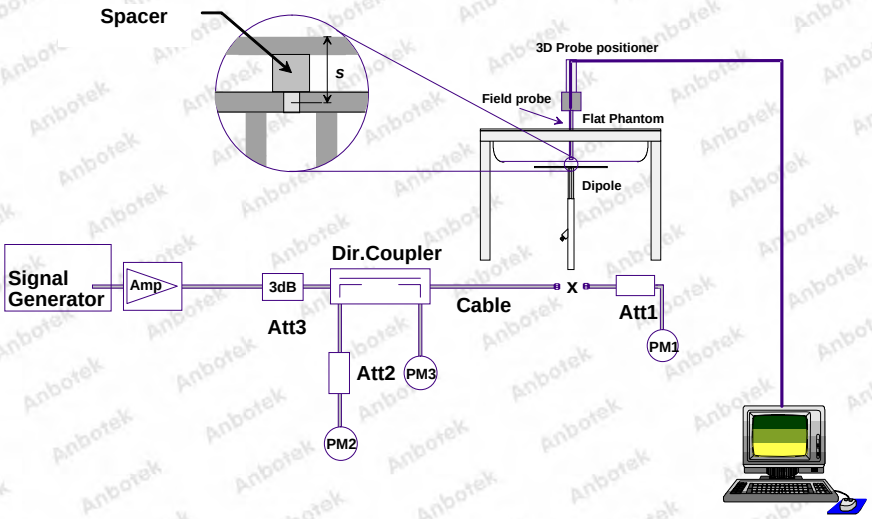

System Setup for System Evaluation

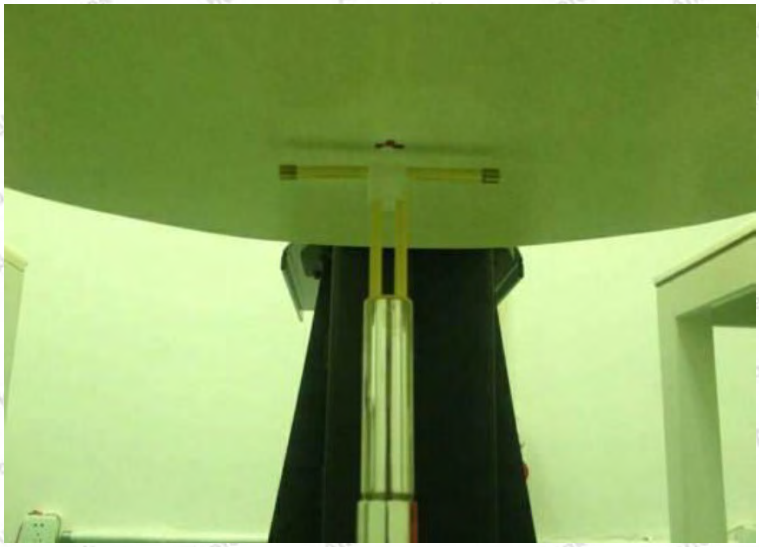

Photo of Dipole Setup

Validation Results

Comparing to the original SAR value provided by SPEAG, the verification data should be within its specification of 10%. The table below shows the target SAR and measured SAR after normalized to 1W input power. It indicates that the system performance check can meet the variation criterion and the plots can be referred to Appendix A of this report.

Frequency (MHz)	Liquid Type	Power fed onto reference dipole (mW)	Targeted SAR (W/kg)	Measured SAR (W/kg)	Normalized SAR (W/kg)	Deviation (%)	Test Date
2450	Body	250	51.8	12.68	51.57	-0.44	09/25/2023

Target and Measurement SAR after Normalized

8. EUT Testing Position

8.1. Body Worn Position

Body-worn operating configurations are tested with the belt-clips and holsters attached to the device and positioned against a flat phantom in a normal use configuration. Per KDB 648474 D04, body-worn accessory exposure is typically related to voice mode operations when handsets are carried in body-worn accessories. The body-worn accessory procedures in FCC KDB 447498 D01 v06, 2015 should be used to test for body-worn accessory SAR compliance, without a headset connected to it. This enables the test results for such configuration to be compatible with that required for hotspot mode when the body-worn accessory test separation distance is greater than or equal to that required for hotspot mode, when applicable. When the reported SAR for body-worn accessory, measured without a headset connected to the handset is < 1.2 W/kg, the highest reported SAR configuration for that wireless mode and frequency band should be repeated for that body-worn accessory with a handset attached to the handset.

Accessories for body-worn operation configurations are divided into two categories: those that do not contain metallic components and those that do contain metallic components and those that do contain metallic components. When multiple accessories that do not contain metallic components are supplied with the device, the device is tested with only the accessory that dictates the closest spacing to the body. Then multiple accessories that contain metallic components are test with the device with each accessory. If multiple accessories share an identical metallic component (i.e. the same metallic belt-chip used with different holsters with no other metallic components) only the accessory that dictates the closest spacing to the body is tested.

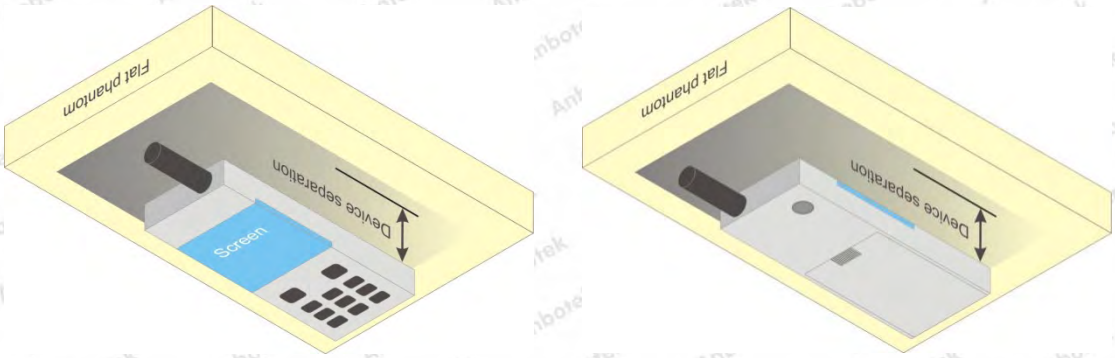

Body Worn Position

9. Measurement Procedures

The measurement procedures are as follows:

(a) Use base station simulator (if applicable) or engineering software to transmit RF power continuously (continuous Tx) in the middle channel.
(b) Keep EUT to radiate maximum output power or 100% duty factor (if applicable)
(c) Measure output power through RF cable and power meter.
(d) Place the EUT in the positions as setup photos demonstrates.
(e) Set scan area, grid size and other setting on the DASY software.
(f) Measure SAR transmitting at the middle channel for all applicable exposure positions.
(g) Identify the exposure position and device configuration resulting the highest SAR
(h) Measure SAR at the lowest and highest channels at the worst exposure position and device configuration if applicable.

According to the test standard, the recommended procedure for assessing the peak spatial-average SAR value consists of the following steps:

(a) Power reference measurement
(b) Area scan
(c) Zoom scan
(d) Power drift measurement

9. 1 Spatial Peak SAR Evaluation

The procedure for spatial peak SAR evaluation has been implemented according to the test standard. It can be conducted for 1g and 10g, as well as for user-specific masses. The DASY software includes all numerical procedures necessary to evaluate the spatial peak SAR value.

The base for the evaluation is a "cube" measurement. The measured volume must include the 1g and 10g cubes with the highest averaged SAR values. For that purpose, the center of the measured volume is aligned to the interpolated peak SAR value of a previously performed area scan.

The entire evaluation of the spatial peak values is performed within the post-processing engine (SEMCAD). The system always gives the maximum values for the 1g and 10g cubes. The algorithm to find the cube with highest averaged SAR is divided into the following stages:

(a) Extraction of the measured data (grid and values) from the Zoom Scan
(b) Calculation of the SAR value at every measurement point based on all stored data (A/D values and measurement parameters)
(c) Generation of a high-resolution mesh within the measured volume
(d) Interpolation of all measured values form the measurement grid to the high-resolution grid
(e) Extrapolation of the entire 3-D field distribution to the phantom surface over the distance from

sensor to surface

(f) Calculation of the averaged SAR within masses of 1g and 10g

9. 2 Power Reference Measurement

The Power Reference Measurement and Power Drift Measurements are for monitoring the power drift of the device under test in the batch process. The minimum distance of probe sensors to surface determines the closest measurement point to phantom surface. This distance cannot be smaller than the distance of sensor calibration points to probe tip as defined in the probe properties.

9. 3 Area Scan Procedures

The area scan is used as a fast scan in two dimensions to find the area of high field values, before doing a fine measurement around the hot spot. The sophisticated interpolation routines implemented in DASY software can find the maximum found in the scanned area, within a range of the global maximum. The range (in dB0 is specified in the standards for compliance testing. For example, a 2 dB range is required in IEEE standard 1528 and IEC 62209 standards, whereby 3 dB is a requirement when compliance is assessed in accordance with the ARIB standard (Japan), if only one zoom scan follows the area scan, then only the absolute maximum will be taken as reference. For cases where multiple maximums are detected, the number of zoom scans has to be increased accordingly.

Area scan parameters extracted from FCC KDB 865664 D01 SAR measurement 100 MHz to 6 GHz.

	≤ 3 GHz	> 3 GHz
Maximum distance from closest measurement point (geometric center of probe sensors) to phantom surface	5 ± 1 mm	½·δ·ln(2) ± 0.5 mm
Maximum probe angle from probe axis to phantom surface normal at the measurement location	30° ± 1°	20° ± 1°
Maximum area scan spatial resolution: Δx_{Area}, Δy_{Area}	≤ 2 GHz: ≤ 15 mm 2 – 3 GHz: ≤ 12 mm	3 – 4 GHz: ≤ 12 mm 4 – 6 GHz: ≤ 10 mm
	When the x or y dimension of the test device, in the measurement plane orientation, is smaller than the above, the measurement resolution must be ≤ the corresponding x or y dimension of the test device with at least one measurement point on the test device.	

9.4 Zoom Scan Procedures

Zoom scans are used assess the peak spatial SAR values within a cubic averaging volume containing 1 gram and 10gram of simulated tissue. The zoom scan measures points (refer to table below) within a cube shoes base faces are centered on the maxima found in a preceding area scan job within the same procedure. When the measurement is done, the zoom scan evaluates the averaged SAR for 1 gram and 10 gram and displays these values next to the job's label.

Zoom scan parameters extracted from FCC KDB 865664 D01 SAR measurement 100 MHz to 6 GHz.

			≤ 3 GHz	> 3 GHz
Maximum zoom scan spatial resolution: Δx_{Zoom}, Δy_{Zoom}			≤ 2 GHz: ≤ 8 mm 2 – 3 GHz: ≤ 5 mm*	3 – 4 GHz: ≤ 5 mm* 4 – 6 GHz: ≤ 4 mm*
Maximum zoom scan spatial resolution, normal to phantom surface	uniform grid: $\Delta z_{Zoom}(n)$		≤ 5 mm	3 – 4 GHz: ≤ 4 mm 4 – 5 GHz: ≤ 3 mm 5 – 6 GHz: ≤ 2 mm
	graded grid	$\Delta z_{Zoom}(1)$: between 1st two points closest to phantom surface	≤ 4 mm	3 – 4 GHz: ≤ 3 mm 4 – 5 GHz: ≤ 2.5 mm 5 – 6 GHz: ≤ 2 mm
		$\Delta z_{Zoom}(n>1)$: between subsequent points	$\leq 1.5 \cdot \Delta z_{Zoom}(n-1)$	
Minimum zoom scan volume	x, y, z		≥ 30 mm	3 – 4 GHz: ≥ 28 mm 4 – 5 GHz: ≥ 25 mm 5 – 6 GHz: ≥ 22 mm

Note: δ is the penetration depth of a plane-wave at normal incidence to the tissue medium; see draft standard IEEE P1528-2011 for details.

* When zoom scan is required and the *reported* SAR from the *area scan based 1-g SAR estimation* procedures of KDB 447498 is ≤ 1.4 W/kg, ≤ 8 mm, ≤ 7 mm and ≤ 5 mm zoom scan resolution may be applied, respectively, for 2 GHz to 3 GHz, 3 GHz to 4 GHz and 4 GHz to 6 GHz.

9.5 Volume Scan Procedures

The volume scan is used for assess overlapping SAR distributions for antennas transmitting in different frequency bands. It is equivalent to an oversized zoom scan used in standalone measurements. The measurement volume will be used to enclose all the simultaneous transmitting antennas. For antennas transmitting simultaneously in different frequency bands, the volume scan is measured separately in each frequency band. In order to sum correctly to compute the 1g aggregate SAR, the EUT remain in the same test position for all measurements and all volume scan use the same spatial resolution and grid spacing. When all volume scan were completed, the software, SEMCAD postprocessor can combine and subsequently superpose these measurement data to calculating the multiband SAR.

9.6 Power Drift Monitoring

All SAR testing is under the EUT install full charged battery and transmit maximum output power. In DASY measurement software, the power reference measurement and power drift measurement procedures are used for monitoring the power drift of EUT during SAR test. Both these procedures measure the field at a specified reference position before and after the SAR testing. The software will calculate the field difference in dB. If the power drift more than 5%, the SAR will be retested.

10. Conducted Power

<WIFI 2.4GHz Conducted Power>

Mode	Channel	Frequency (MHz)	Peak Power (dBm)	Average Power(dBm)	Tune-Up Limit(dBm)	Test Rate Data
802.11 b	1	2412	13.88	12.85	14.00	1 Mbps
	6	2437	14.47	13.44	14.00	1 Mbps
	11	2462	14.73	**13.75**	14.00	1 Mbps
802.11 g	1	2412	13.82	11.04	12.00	6 Mbps
	6	2437	14.62	11.85	12.00	6 Mbps
	11	2462	14.29	11.46	12.00	6 Mbps
802.11 N(HT20)	1	2412	13.73	10.84	12.00	MCS0
	6	2437	14.58	11.69	12.00	MCS0
	11	2462	14.75	11.83	12.00	MCS0
802.11 N(HT40)	3	2422	14.80	12.80	13.50	MCS0
	6	2437	15.50	13.49	13.50	MCS0
	9	2452	15.17	13.19	13.50	MCS0

Note:

1. Per KDB 447498 D01 v06, the test distance less than 5mm
2. Per KDB 248227 D01, choose the highest output power channel to test SAR and determine further SAR exclusion.
3. Per KDB 248227 D01, In the 2.4 GHz band, separate SAR procedures are applied to DSSS and OFDM configurations to simplify DSSS test requirements. SAR is not required for the following 2.4 GHz OFDM conditions:

   1)When KDB Publication 447498 SAR test exclusion applies to the OFDM configuration.

   2)When the highest reported SAR for DSSS is adjusted by the ratio of OFDM to DSSS specified maximum output power and the adjusted SAR is ≤ 1.2 W/kg.

<Bluetooth Conducted Power>

TestMode	Channel	Peak Power (dBm)	Average Power(dBm)	Maximum Tune-Up(dBm)
GFSK(BT BDR)	2402	-0.15	-2.65	-2.00
	2441	0.18	-2.32	-2.00
	2480	-0.42	-2.92	-2.00
π/4-DQPSK (BT EDR)	2402	1.99	-0.51	0.00
	2441	2.40	-0.10	0.00
	2480	1.92	-0.58	0.00
8DPSK (BT EDR)	2402	2.55	0.05	0.50
	2441	2.93	**0.43**	0.50
	2480	2.32	-0.18	0.50
GFSK(BT BLE_1M)	2402	-0.26	-1.76	-1.00
	2440	0.12	-1.38	-1.00
	2480	-0.46	-1.96	-1.00

Note:

Per KDB 447498 D01v05r02, the 1-g and 10-g SAR test exclusion thresholds for 100 MHz to 6 GHz at test separation distances ≤ 50 mm are determined by:

[(max. power of channel, including tune-up tolerance, mW)/(min. test separation distance, mm)] ·[√f(GHz)] ≤ 3.0 for 1-g SAR and ≤ 7.5 for 10-g extremity SAR

f(GHz) is the RF channel transmit frequency in GHz

Power and distance are rounded to the nearest mW and mm before calculation

The result is rounded to one decimal place for comparison

Bluetooth Max Turn-up Power (dBm)	Separation Distance (mm)	Frequency (GHz)	exclusion thresholds
0.50	5	2.441	0.350

Per KDB 447498 D01, when the minimum test separation distance is < 5 mm, a distance of 5 mm is applied to determine SAR test exclusion. The test exclusion threshold is 0.350 which is<= 3, SAR testing is not required.

11. Antenna Location

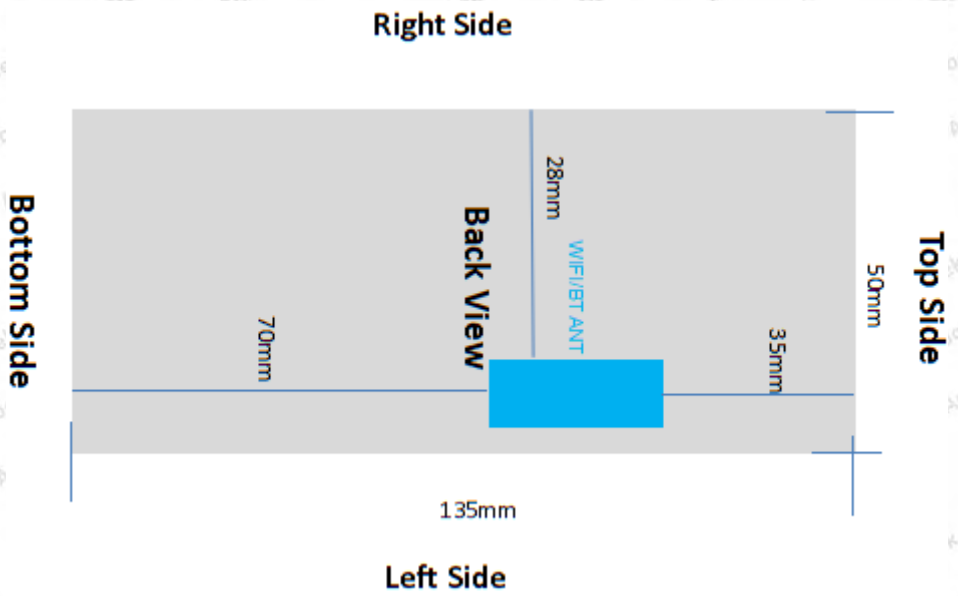

Distance of The Antenna vertical to the EUT surface and edge						
Antennas	**Front**	**Back**	**Top Side**	**Bottom Side**	**Left Side**	**Right Side**
WiFi/BT ANT	<25mm	<25mm	>25mm	>25mm	<25mm	>25mm

12. SAR Test Results Summary

General Note:

1. Per KDB 447498 D01 v06, the reported SAR is the measured SAR value adjusted for maximum tune-up tolerance.

   Scaling Factor = tune-up limit power (mW) / EUT RF power (mW), where tune-up limit is the maximum rated power among all production units.

   Reported SAR(W/kg)= Measured SAR(W/kg) Scaling Factor*

2. Per KDB 447498 D01 v06, for each exposure position, if the highest output channel reported SAR≤0.8W/kg, other channels SAR testing are not necessary

<WIFI 2.4GHz>

Plot No.	Band	Mode	Test Position	Gap (cm)	Ch.	Freq. (MHz)	Average Power (dBm)	Tune-Up Limit (dBm)	Scaling Factor	Power Drift (dB)	Measured SAR_{1g} (W/kg)	Reported SAR_{1g} (W/kg)
#1	WIFI 2.4GHz	802.11b	Back	0	11	2462	13.75	14.00	1.059	-0.12	0.654	**0.693**
	WIFI 2.4GHz	802.11b	Front	0	11	2462	13.75	14.00	1.059	0.09	0.421	0.446
	WIFI 2.4GHz	802.11b	Right	0	11	2462	13.75	14.00	1.059	N/A	N/A	N/A
	WIFI 2.4GHz	802.11b	Left	0	11	2462	13.75	14.00	1.059	0.14	0.464	0.491
	WIFI 2.4GHz	802.11b	Top	0	11	2462	13.75	14.00	1.059	N/A	N/A	N/A
	WIFI 2.4GHz	802.11b	Bottom	0	11	2462	13.75	14.00	1.059	N/A	N/A	N/A

13. Measurement Uncertainty

NO	Source	Uncert. ai（%）	Prob. Dist.	Div. k	ci (1g)	ci (10g)	Stand.Uncert. ui (1g)	Stand.Uncert. ui (10g)	*Veff*
1	Repeat	0. 4	N	1	1	1	0. 4	0. 4	9
Instrument									
2	Probe calibration	7	N	2	1	1	3.5	3.5	∞
3	Axial isotropy	4.7	R	$\sqrt{3}$	0.7	0.7	1.9	1.9	∞
4	Hemispherical isotropy	9.4	R	$\sqrt{3}$	0.7	0.7	3.9	3.9	∞
5	Boundary effect	1.0	R	$\sqrt{3}$	1	1	0.6	0.6	∞
6	Linearity	4.7	R	$\sqrt{3}$	1	1	2.7	2.7	∞
7	Detection limits	1.0	R	$\sqrt{3}$	1	1	0.6	0.6	∞
8	Readout electronics	0.3	N	1	1	1	0.3	0.3	∞
9	Response time	0.8	R	$\sqrt{3}$	1	1	0.5	0.5	∞
10	Integration time	2.6	R	$\sqrt{3}$	1	1	1.5	1.5	∞
11	Ambient noise	3.0	R	$\sqrt{3}$	1	1	1.7	1.7	∞
12	Ambient reflections	3.0	R	$\sqrt{3}$	1	1	1.7	1.7	∞
13	Probe positioner mech. restrictions	0.4	R	$\sqrt{3}$	1	1	0.2	0.2	∞

14	Probe positioning with respect to phantom shell	2.9	R	$\sqrt{3}$	1	1	1.7	1.7	∞
15	Max.SAR evaluation	1.0	R	$\sqrt{3}$	1	1	0.6	0.6	∞
Test sample related									
16	Device positioning	3.8	N	1	1	1	3.8	3.8	99
17	Device holder	5.1	N	1	1	1	5.1	5.1	5
18	Drift of output power	5.0	R	$\sqrt{3}$	1	1	2.9	2.9	∞
Phantom and set-up									
19	Phantom uncertainty	4.0	R	$\sqrt{3}$	1	1	2.3	2.3	∞
20	Liquid conductivity (target)	5.0	R	$\sqrt{3}$	0.64	0.43	1.8	1.2	∞
21	Liquid conductivity (meas)	2.5	N	1	0.64	0.43	1.6	1.2	∞
22	Liquid Permittivity (target)	5.0	R	$\sqrt{3}$	0.6	0.49	1.7	1.5	∞
23	Liquid Permittivity (meas)	2.5	N	1	0.6	0.49	1.5	1.2	∞
Combined standard			RSS	$U_C = \sum_{i=1}^{n} C_i^2 U_i^2$			11.4%	11.3%	236
Expanded uncertainty(P=95%)		$U_C = k U_C$,k=2					**22.8%**	**22.6%**	

Appendix A. EUT Photos and Test Setup Photos

	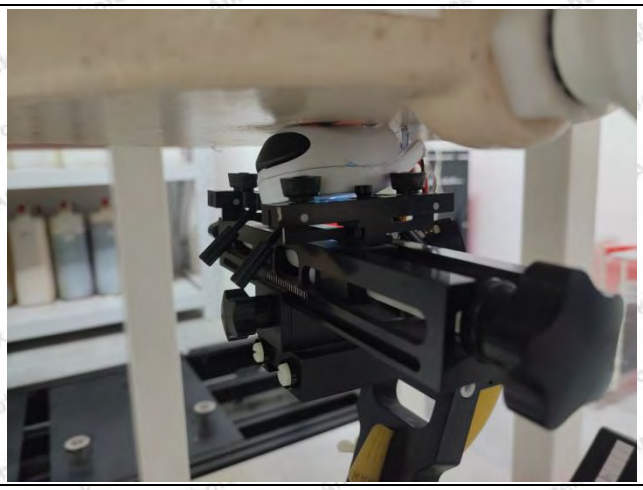
Front(0mm)	**Back(0mm)**
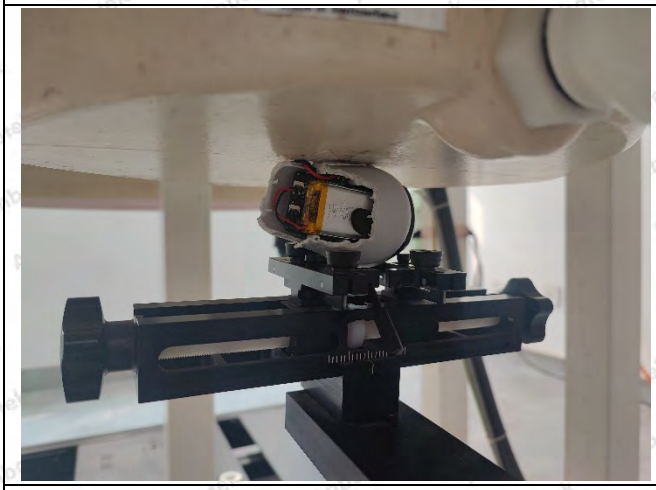	
Left(0mm)	

Appendix B. Plots of SAR System Check

2450MHz System Check Date: 09/25/2023

DUT: Dipole 2450 MHz; Type: D2450V2; Serial: D2450V2 - SN:910

Communication System: UID 0, CW; Frequency: 2450 MHz;Duty Cycle: 1:1

Medium parameters used: f = 2450 MHz; σ = 1.88 S/m; ε_r = 51.88 ρ = 1000 kg/m^3

Phantom section: Flat Section

DASY5 Configuration:

- Probe: EX3DV4 – SN7396; ConvF(7.53, 7.53, 7.53); Calibrated: May 06, 2023;
- Sensor-Surface: 2mm (Mechanical Surface Detection)
- Electronics: DAE4 Sn387; Calibrated: Sep. 06, 2023
- Phantom: SAM; Type: QD000P40CD; Serial: TP:1670
- Measurement SW: DASY52, Version 52.8 (2); SEMCAD X Version 14.6.10 (7164)

Configuration/Pin=250mW/Area Scan (81x81x1): Interpolated grid: dx=1.200 mm, dy=1.200 mm
Maximum value of SAR (interpolated) = 20.4 W/kg
Configuration/Pin=250mW/Zoom Scan (7x7x7)/Cube 0: Measurement grid: dx=5mm, dy=5mm, dz=5mm
Reference Value = 88.891 V/m; Power Drift = 0.09 dB
Peak SAR (extrapolated) = 26.5 W/kg
SAR(1 g) = 12.68 W/kg; SAR(10 g) = 5.82 W/kg
Maximum value of SAR (measured) = 20.1 W/kg

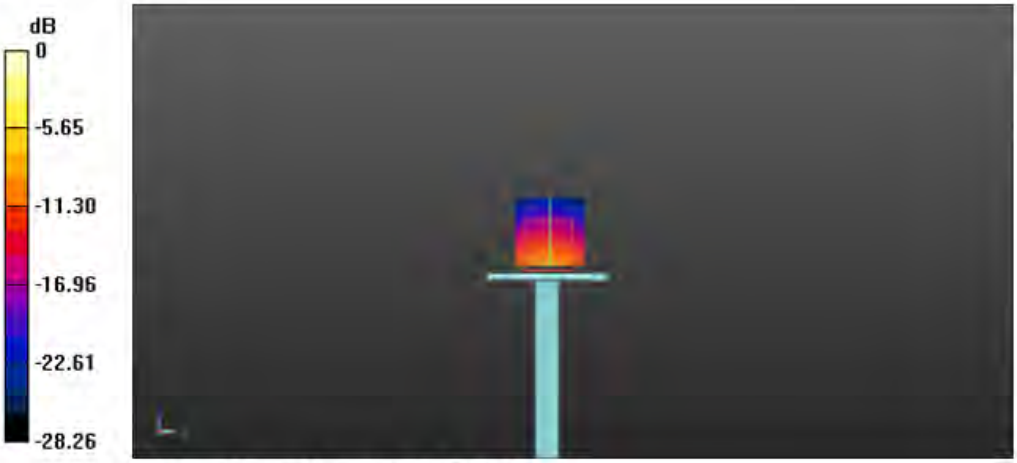

0 dB = 20.1 W/kg = 13.03 dBW/kg

Appendix C. Plots of SAR Test Data

#1 Date: 09/27/2023

WIFI 2.4G_802.11b_Body Back _Ch11

Communication System: UID 0; Frequency: 2462MHz;Duty Cycle: 1:1
Medium parameters used (interpolated): f = 2462MHz; σ = 1.88 S/m; ε_r = 51.88; ρ = 1000 kg/m^3
Phantom section: Flat Section
DASY5 Configuration:

- Probe: EX3DV4 – SN7396; ConvF(7.53, 7.53, 7.53); Calibrated: May 06, 2023;
- Sensor-Surface: 2mm (Mechanical Surface Detection)
- Electronics: DAE4 Sn387; Calibrated: Sep. 06, 2023
- Phantom: SAM; Type: QD000P40CD; Serial: TP:1670
- Measurement SW: DASY52, Version 52.8 (2); SEMCAD X Version 14.6.10 (7164)

BODY/BACK /Area Scan (51x71x1): Measurement grid: dx=1.000mm, dy=1.000mm
Maximum value of SAR (measured) = 1.357 W/kg

BODY/BACK /Zoom Scan (7x7x7)/Cube 0: Measurement grid: dx=5mm, dy=5mm, dz=5mm
Reference Value = 10.741 V/m; Power Drift = -0.12 dB
Peak SAR (extrapolated) = 1.465 W/kg
SAR(1 g) = 0.654 W/kg; SAR(10 g) = 0.302 W/kg
Maximum value of SAR (measured) = 1.493 W/kg

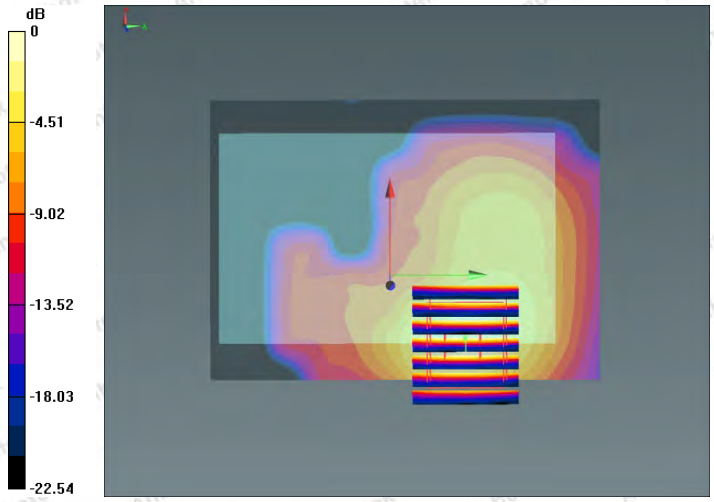

Appendix D. DASY System Calibration Certificate

In Collaboration with
CTTL speag CALIBRATION LABORATORY
Add: No.51 Xueyuan Road, Haidian District, Beijing, 100191, China
Tel: +86-10-62304633-2218 Fax: +86-10-62304633-2209
E-mail: cttl@chinattl.com Http://www.chinattl.cn

中国认可 国际互认 校准 CALIBRATION CNAS L0570

Client **Anbotek (Auden)** **Certificate No: Z23-98671**

CALIBRATION CERTIFICATE

Object	EX3DV4 - SN:7396
Calibration Procedure(s)	FF-Z12-006-08 Calibration Procedures for Dosimetric E-field Probes
Calibration date:	May 06 , 2023

This calibration Certificate documents the traceability to national standards, which realize the physical units of measurements(SI). The measurements and the uncertainties with confidence probability are given on the following pages and are part of the certificate.

All calibrations have been conducted in the closed laboratory facility: environment temperature(22±3)℃ and humidity<70%.

Calibration Equipment used (M&TE critical for calibration)

Primary Standards	ID #	Cal Date(Calibrated by, Certificate No.)	Scheduled Calibration
Power Meter NRP2	101919	20-Jun-22 (CTTL, No.J22X07447)	Jun-21
Power sensor NRP-Z91	101547	20-Jun-22 (CTTL, No.J22X07447)	Jun-21
Power sensor NRP-Z91	101548	20-Jun-22 (CTTL, No.J22X07447)	Jun-21
Reference10dBAttenuator	18N50W-10dB	13-Mar-23(CTTL,No.J23X01547)	Mar-22
Reference20dBAttenuator	18N50W-20dB	13-Mar-23(CTTL, No.J23X01548)	Mar-22
Reference Probe EX3DV4	SN 7433	26-Sep-22(SPEAG,No.EX3-7433_Sep22)	Sep-21
DAE4	SN 549	13-Dec-22(SPEAG, No.DAE4-549_Dec22)	Dec -21
Secondary Standards	**ID #**	**Cal Date(Calibrated by, Certificate No.)**	**Scheduled Calibration**
SignalGeneratorMG3700A	6201052605	27-Jun-22 (CTTL, No.J22X04776)	Jun-21
Network Analyzer E5071C	MY46110673	13-Jan-23 (CTTL, No.J23X00285)	Jan -22

	Name	Function	Signature
Calibrated by:	Yu Zongying	SAR Test Engineer	
Reviewed by:	Lin Hao	SAR Test Engineer	
Approved by:	Qi Dianyuan	SAR Project Leader	

Issued: May06 , 2023

This calibration certificate shall not be reproduced except in full without written approval of the laboratory.

Shenzhen Anbotek Compliance Laboratory Limited
Address:1/F.,Building D,Sogood Science and Technology Park, Sanwei Community, Hangcheng Street, Bao'an District, Shenzhen, Guangdong, China.
Tel:(86) 0755-26066440 Fax:(86) 0755-26014772 Email:service@anbotek.com
Hotline 400-003-0500
www.anbotek.com.cn

CTTL In Collaboration with speag CALIBRATION LABORATORY

Add: No.51 Xueyuan Road, Haidian District, Beijing, 100191, China
Tel: +86-10-62304633-2218 Fax: +86-10-62304633-2209
E-mail: cttl@chinattl.com Http://www.chinattl.cn

Glossary:

TSL	tissue simulating liquid
NORMx,y,z	sensitivity in free space
ConvF	sensitivity in TSL / NORMx,y,z
DCP	diode compression point
CF	crest factor (1/duty_cycle) of the RF signal
A,B,C,D	modulation dependent linearization parameters
Polarization Φ	Φ rotation around probe axis
Polarization θ	θ rotation around an axis that is in the plane normal to probe axis (at measurement center), i θ=0 is normal to probe axis
Connector Angle	information used in DASY system to align probe sensor X to the robot coordinate system

Calibration is Performed According to the Following Standards:

a) IEEE Std 1528-2013, "IEEE Recommended Practice for Determining the Peak Spatial-Averaged Specific Absorption Rate (SAR) in the Human Head from Wireless Communications Devices: Measurement Techniques", June 2013

b) IEC 62209-1, "Procedure to measure the Specific Absorption Rate (SAR) for hand-held devices used in close proximity to the ear (frequency range of 300MHz to 3GHz)", February 2005

c) IEC 62209-2, "Procedure to determine the Specific Absorption Rate (SAR) for wireless communication devices used in close proximity to the human body (frequency range of 30 MHz to 6 GHz)", March 2010

d) KDB 865664, "SAR Measurement Requirements for 100 MHz to 6 GHz"

Methods Applied and Interpretation of Parameters:

- *NORMx,y,z:* Assessed for E-field polarization θ=0 (f≤900MHz in TEM-cell; f>1800MHz: waveguide). NORMx,y,z are only intermediate values, i.e., the uncertainties of NORMx,y,z does not effect the E^2-field uncertainty inside TSL (see below ConvF).
- *NORM(f)x,y,z = NORMx,y,z* frequency_response* (see Frequency Response Chart). This linearization is implemented in DASY4 software versions later than 4.2. The uncertainty of the frequency response is included in the stated uncertainty of ConvF.
- *DCPx,y,z:* DCP are numerical linearization parameters assessed based on the data of power sweep (no uncertainty required). DCP does not depend on frequency nor media.
- PAR: PAR is the Peak to Average Ratio that is not calibrated but determined based on the signal characteristics.
- *Ax,y,z; Bx,y,z; Cx,y,z;VRx,y,z:*A,B,C are numerical linearization parameters assessed based on the data of power sweep for specific modulation signal. The parameters do not depend on frequency nor media. VR is the maximum calibration range expressed in RMS voltage across the diode.
- *ConvF and Boundary Effect Parameters:* Assessed in flat phantom using E-field (or Temperature Transfer Standard for f≤800MHz) and inside waveguide using analytical field distributions based on power measurements for f >800MHz. The same setups are used for assessment of the parameters applied for boundary compensation (alpha, depth) of which typical uncertainty valued are given. These parameters are used in DASY4 software to improve probe accuracy close to the boundary. The sensitivity in TSL corresponds to NORMx,y,z* ConvF whereby the uncertainty corresponds to that given for ConvF. A frequency dependent ConvF is used in DASY version 4.4 and higher which allows extending the validity from±50MHz to±100MHz.
- *Spherical isotropy (3D deviation from isotropy):* in a field of low gradients realized using a flat phantom exposed by a patch antenna.
- *Sensor Offset:* The sensor offset corresponds to the offset of virtual measurement center from the probe tip (on probe axis). No tolerance required.
- *Connector Angle:* The angle is assessed using the information gained by determining the *NORMx* (no uncertainty required).

In Collaboration with
CTTL speag
CALIBRATION LABORATORY
Add: No.51 Xueyuan Road, Haidian District, Beijing, 100191, China
Tel: +86-10-62304633-2218 Fax: +86-10-62304633-2209
E-mail: cttl@chinattl.com Http://www.chinattl.cn

Probe EX3DV4

SN: 7396

Calibrated: May 06, 2023

Calibrated for DASY/EASY Systems

(Note: non-compatible with DASY2 system!)

Shenzhen Anbotek Compliance Laboratory Limited
Address:1/F.,Building D,Sogood Science and Technology Park, Sanwei Community, Hangcheng Street, Bao'an District, Shenzhen, Guangdong, China.
Tel:(86) 0755-26066440 Fax:(86) 0755-26014772 Email:service@anbotek.com
Hotline 400-003-0500
www.anbotek.com.cn

In Collaboration with
s p e a g
CALIBRATION LABORATORY
Add: No.51 Xueyuan Road, Haidian District, Beijing, 100191, China
Tel: +86-10-62304633-2218 Fax: +86-10-62304633-2209
E-mail: cttl@chinattl.com Http://www.chinattl.cn

DASY/EASY – Parameters of Probe: EX3DV4 – SN: 7396

Basic Calibration Parameters

	Sensor X	Sensor Y	Sensor Z	Unc (k=2)
Norm(μV/(V/m)^2)[A]	0.54	0.53	0.50	±10.0%
DCP(mV)[B]	97.8	104.5	102.5	

Modulation Calibration Parameters

UID	Communication System Name		A dB	B dB√μV	C	D dB	VR mV	Unc[E] (k=2)
0	CW	X	0.0	0.0	1.0	0.00	199.9	±2.4%
		Y	0.0	0.0	1.0		203.3	
		Z	0.0	0.0	1.0		195.0	

The reported uncertainty of measurement is stated as the standard uncertainty of Measurement multiplied by the coverage factor k=2, which for a normal distribution Corresponds to a coverage probability of approximately 95%.

[A] The uncertainties of Norm X, Y, Z do not affect the E^2-field uncertainty inside TSL (see Page 5 and Page 6).
[B] Numerical linearization parameter: uncertainty not required.
[E] Uncertainly is determined using the max. deviation from linear response applying rectangular distribution and is expressed for the square of the field value.

Shenzhen Anbotek Compliance Laboratory Limited
Address:1/F.,Building D,Sogood Science and Technology Park, Sanwei Community, Hangcheng Street, Bao'an District, Shenzhen, Guangdong, China.
Tel:(86) 0755-26066440 Fax:(86) 0755-26014772 Email:service@anbotek.com
Hotline 400-003-0500
www.anbotek.com.cn

In Collaboration with
CTTL speag CALIBRATION LABORATORY
Add: No.51 Xueyuan Road, Haidian District, Beijing, 100191, China
Tel: +86-10-62304633-2218 Fax: +86-10-62304633-2209
E-mail: cttl@chinattl.com Http://www.chinattl.cn

DASY/EASY – Parameters of Probe: EX3DV4 – SN: 7396

Calibration Parameter Determined in Head Tissue Simulating Media

f [MHz][C]	Relative Permittivity [F]	Conductivity (S/m) [F]	ConvF X	ConvF Y	ConvF Z	Alpha[G]	Depth[G] (mm)	Unct. (k=2)
750	41.9	0.89	9.82	9.82	9.82	0.30	0.85	±12.1%
835	41.5	0.90	9.71	9.71	9.71	0.15	1.36	±12.1%
900	41.5	0.97	9.87	9.87	9.87	0.16	1.37	±12.1%
1750	40.1	1.37	8.61	8.61	8.61	0.25	1.04	±12.1%
1900	40.0	1.40	8.13	8.13	8.13	0.24	1.01	±12.1%
2100	39.8	1.49	8.14	8.14	8.14	0.24	1.04	±12.1%
2300	39.5	1.67	7.85	7.85	7.85	0.40	0.75	±12.1%
2450	39.2	1.80	7.57	7.57	7.57	0.50	0.75	±12.1%
2600	39.0	1.96	7.38	7.38	7.38	0.64	0.68	±12.1%
5250	35.9	4.71	5.33	5.33	5.33	0.45	1.30	±13.3%
5600	35.5	5.07	4.89	4.89	4.89	0.45	1.35	±13.3%
5750	35.4	5.22	4.92	4.92	4.92	0.45	1.45	±13.3%

[C] Frequency validity above 300 MHz of ±100MHz only applies for DASY v4.4 and higher (Page 2), else it is restricted to ±50MHz. The uncertainty is the RSS of ConvF uncertainty at calibration frequency and the uncertainty for the indicated frequency band. Frequency validity below 300 MHz is ± 10, 25, 40, 50 and 70 MHz for ConvF assessments at 30, 64, 128, 150 and 220 MHz respectively. Above 5 GHz frequency validity can be extended to ± 110 MHz.

[F] At frequency below 3 GHz, the validity of tissue parameters (ε and σ) can be relaxed to ±10% if liquid compensation formula is applied to measured SAR values. At frequencies above 3 GHz, the validity of tissue parameters (ε and σ) is restricted to ±5%. The uncertainty is the RSS of the ConvF uncertainty for indicated target tissue parameters.

[G] Alpha/Depth are determined during calibration. SPEAG warrants that the remaining deviation due to the boundary effect after compensation is always less than ± 1% for frequencies below 3 GHz and below ± 2% for the frequencies between 3-6 GHz at any distance larger than half the probe tip diameter from the boundary.

In Collaboration with
CTTL speag CALIBRATION LABORATORY
Add: No.51 Xueyuan Road, Haidian District, Beijing, 100191, China
Tel: +86-10-62304633-2218 Fax: +86-10-62304633-2209
E-mail: cttl@chinattl.com Http://www.chinattl.cn

DASY/EASY – Parameters of Probe: EX3DV4 – SN: 7396

Calibration Parameter Determined in Body Tissue Simulating Media

f [MHz][C]	Relative Permittivity [F]	Conductivity (S/m) [F]	ConvF X	ConvF Y	ConvF Z	Alpha[G]	Depth[G] (mm)	Unct. (k=2)
750	55.5	0.96	10.09	10.09	10.09	0.30	0.90	±12.1%
835	55.2	0.97	9.88	9.88	9.88	0.19	1.32	±12.1%
900	55.0	1.05	9.82	9.82	9.82	0.23	1.15	±12.1%
1750	53.4	1.49	8.24	8.24	8.24	0.24	1.06	±12.1%
1900	53.3	1.52	7.97	7.97	7.97	0.19	1.24	±12.1%
2100	53.2	1.62	8.18	8.18	8.18	0.19	1.39	±12.1%
2300	52.9	1.81	7.88	7.88	7.88	0.55	0.80	±12.1%
2450	52.7	1.95	7.53	7.53	7.53	0.46	0.89	±12.1%
2600	52.5	2.16	7.38	7.38	7.38	0.52	0.80	±12.1%
5250	48.9	5.36	4.93	4.93	4.93	0.45	1.80	±13.3%
5600	48.5	5.77	4.19	4.19	4.19	0.48	1.90	±13.3%
5750	48.3	5.94	4.52	4.52	4.52	0.48	1.95	±13.3%

[C] Frequency validity above 300 MHz of ±100MHz only applies for DASY v4.4 and higher (Page 2), else it is restricted to ±50MHz. The uncertainty is the RSS of ConvF uncertainty at calibration frequency and the uncertainty for the indicated frequency band. Frequency validity below 300 MHz is ± 10, 25, 40, 50 and 70 MHz for ConvF assessments at 30, 64, 128, 150 and 220 MHz respectively. Above 5 GHz frequency validity can be extended to ± 110 MHz.

[F] At frequency below 3 GHz, the validity of tissue parameters (ε and σ) can be relaxed to ±10% if liquid compensation formula is applied to measured SAR values. At frequencies above 3 GHz, the validity of tissue parameters (ε and σ) is restricted to ±5%. The uncertainty is the RSS of the ConvF uncertainty for indicated target tissue parameters.

[G] Alpha/Depth are determined during calibration. SPEAG warrants that the remaining deviation due to the boundary effect after compensation is always less than ± 1% for frequencies below 3 GHz and below ± 2% for the frequencies between 3-6 GHz at any distance larger than half the probe tip diameter from the boundary.

In Collaboration with
CTTL speag
CALIBRATION LABORATORY
Add: No.51 Xueyuan Road, Haidian District, Beijing, 100191, China
Tel: +86-10-62304633-2218 Fax: +86-10-62304633-2209
E-mail: cttl@chinattl.com Http://www.chinattl.cn

Frequency Response of E-Field
(TEM-Cell: ifi110 EXX, Waveguide: R22)

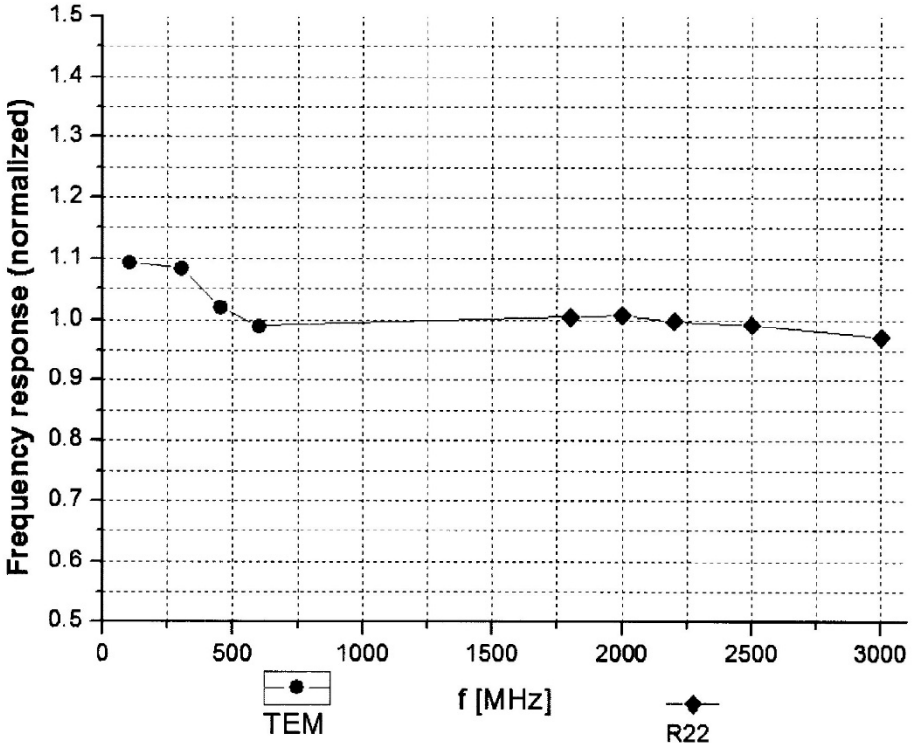

Uncertainty of Frequency Response of E-field: ±7.4% (k=2)

In Collaboration with
s p e a g
CALIBRATION LABORATORY
Add: No.51 Xueyuan Road, Haidian District, Beijing, 100191, China
Tel: +86-10-62304633-2218 Fax: +86-10-62304633-2209
E-mail: cttl@chinattl.com Http://www.chinattl.cn

Receiving Pattern (Φ), θ=0°

f=600 MHz, TEM

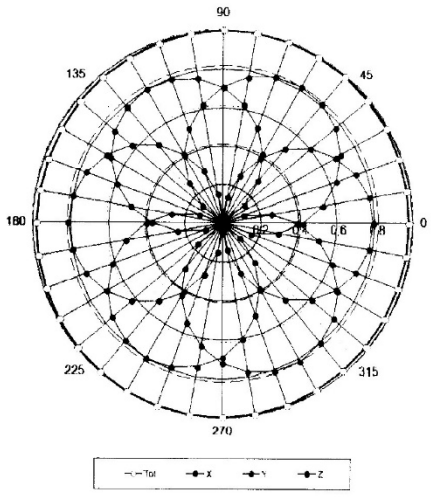

f=1800 MHz, R22

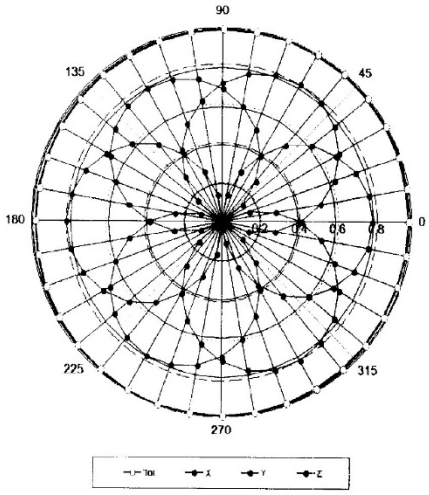

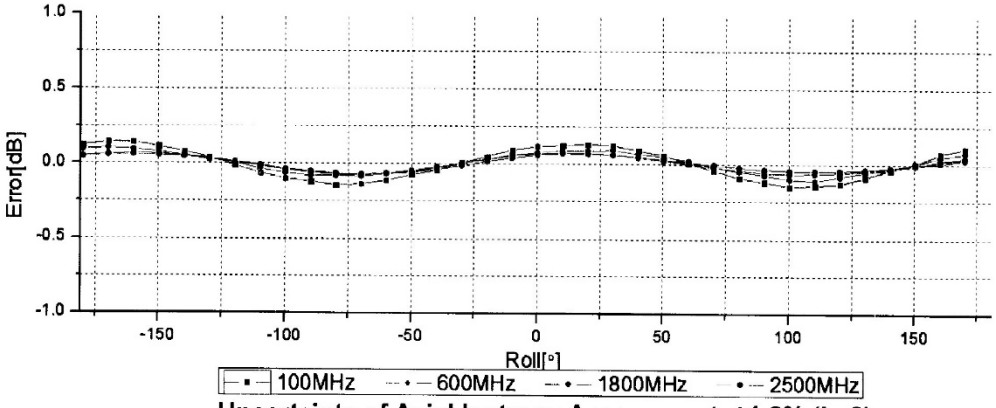

Uncertainty of Axial Isotropy Assessment: ±1.2% (k=2)