Shenzhen Aihui Technology Co. , Ltd.

Antenna specification

Antenna Sample Confirmation From

Name of supplier	ShenZhen Aihui Technology Co., Ltd				
Customer name	Ke Jing Ming				
Sample name	412				
model	**Projector**				
Sample size	115m, wire diameter 1.13, first generation terminal/150mm, wire diameter 1.13, first generation terminal (black)				
Inspection item	**Performance test**	**Visual inspection**	**Structure**	**In the news**	**Test results**
Notes					
Quality Audit		Project Audit		Business confirmation	
The following is to be completed by the client					

Address: 402TEL: 0755-23203435fax: 0755-23203435, Block C, Juxin Science and Technology Industrial Park, Nanchang community, xixiang, Baoan District, Shenzhen

Customer feedback	
Customer signature/seal	date:

Antenna Test Report

Test Unit: Shenzhen Aihui Technology Co. , Ltd.			
Materials	**FPC**		
Antenna form	**PIFA**	Polarization mode	**Linear**
Application scenario	**Wifi**		
Working band	**2400Mhz-2500Mhz**	**VSWR**	**≤2**

Power	**Max：2W**	**Impedance**	**50Ω**
dBi	1.73dBi		
Test Equipment	**HPE5071C、Shielding Room、3D automatic turntable**		

Antenna Description:：
1. Grounding processing and picture description: no
2. Need to change the motherboard to match: no

- Test voltage: 3.6V, check the antenna contact is good before testing.
- The RF cable of the integrated tester is kept in a natural state and can not be curled.

Specification:test the specified power level, all indicators must conform to the specifications.

1.Project Image

The final verification antenna performance prototype in our company for at least one year, easy to analyze and solve the problem of antenna mass production, to ensure the quality of antenna shipment

2.Test Fixture

Objective: to test the passive parameters of antenna as accurately as possible. Making Method: the handset is made of a 50 ohm coaxial cable, one end of which is connected to the test point of the back end of the matching circuit of the handset motherboard (front end of the RF test hole) , and the other end is connected to the SMA joint. The diagram is as follows:

3、Antenna matching circuit

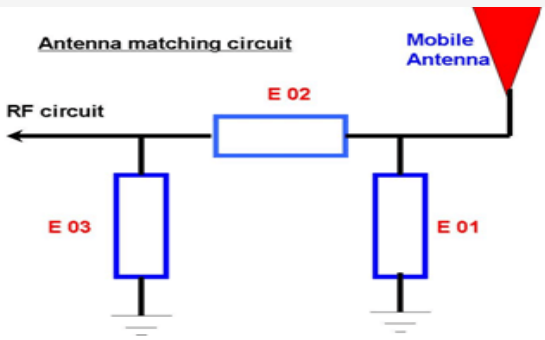

Modify

E01	E02	E03
No	No	No

Note: The match is unmodified.

Address: 402TEL: 0755-23203435fax: 0755-23203435, Block C, Juxin Science and Technology Industrial Park, Nanchang community, xixiang, Baoan District, Shenzhen

4.S11 test

4.0 4.0s11 test method description of test equipment: Network Analyzer (E5071C) test method: a 50 ohm CABLE is used to export from the instrument test port. The SMA connector for connecting the handset is calibrated using a calibration piece, record the echo loss and standing wave ratio corresponding to the relevant frequency points. The test schematic is as follows:

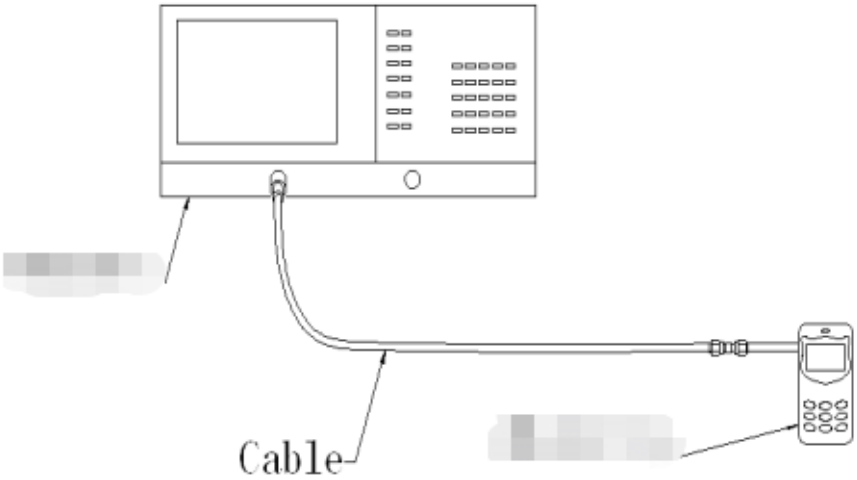

5.Darkroom test equipment and data

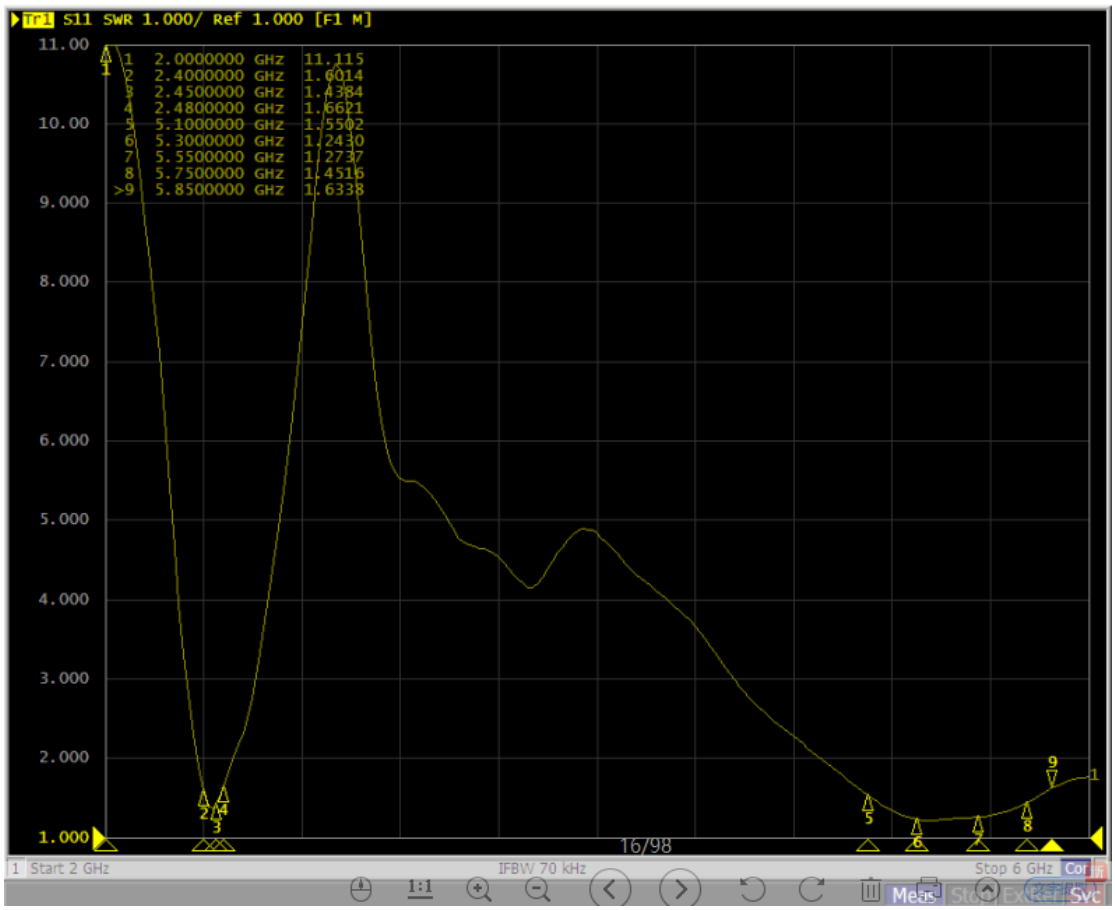

6.Test Equipment
Test system: shielded darkroom
The temperature was 22 ° C ± 3 ° C and the humidity was 50% ± 15%

Test equipment: when testing passive data, use the Network analyzer AGILENTE5071C to test active data, use the omnibus CMW500

7.Active antenna test data

WIFI 测试数据：		
WIFI: 2.4G		
频率（MHZ）	效率（%）	增益（dbi）
2400	60.2	1.27
2410	61.5	1.30
2420	63.5	1.42
2430	59.8	1.36
2440	57.9	1.25
2450	58.4	1.04
2460	57.6	1.09
2470	55.3	1.73
2480	54.6	1.35
2490	59.6	1.42
2500	60.3	1.25

2.4G

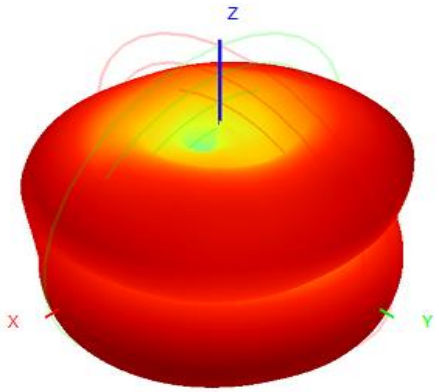

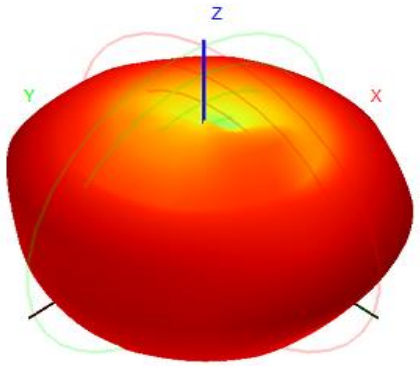

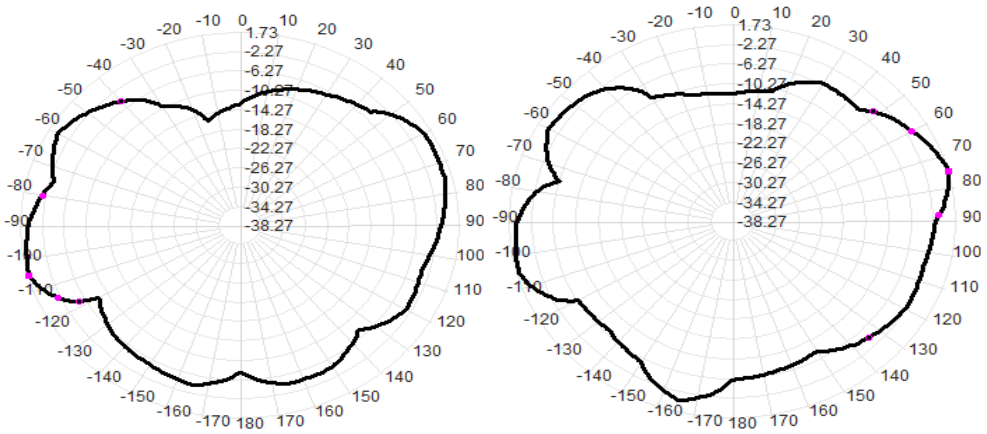

Address: 402TEL: 0755-23203435fax: 0755-23203435, Block C, Juxin Science and Technology Industrial Park, Nanchang community, xixiang, Baoan District, Shenzhen
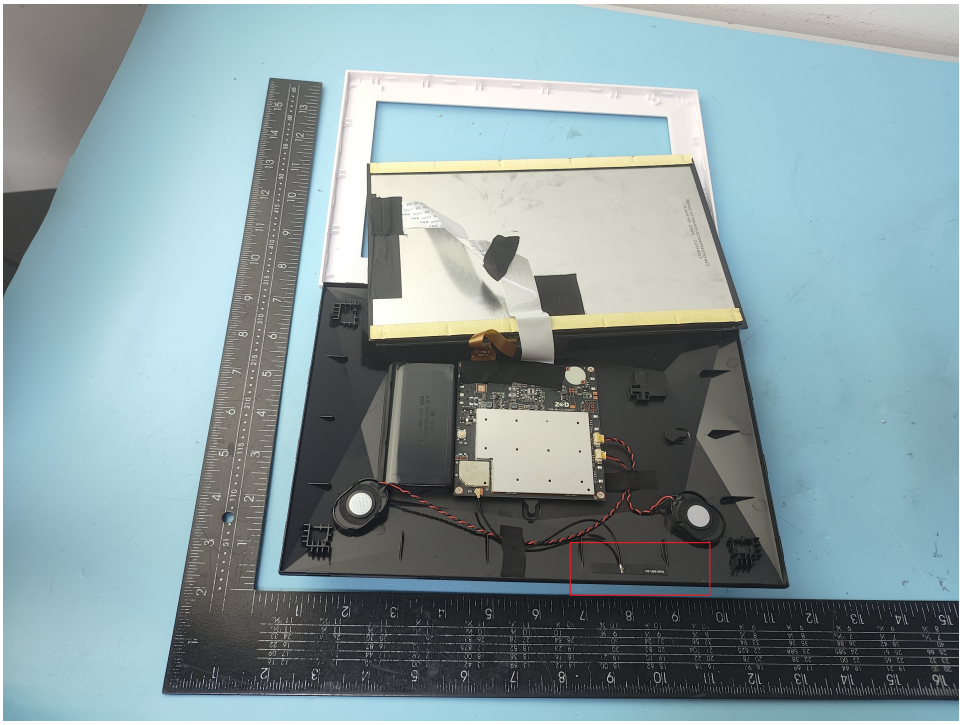
8.Antenna schematic diagram