Installation Guide

Model: D02

Lock Body: American Deadbolt

Version: 1.0

English

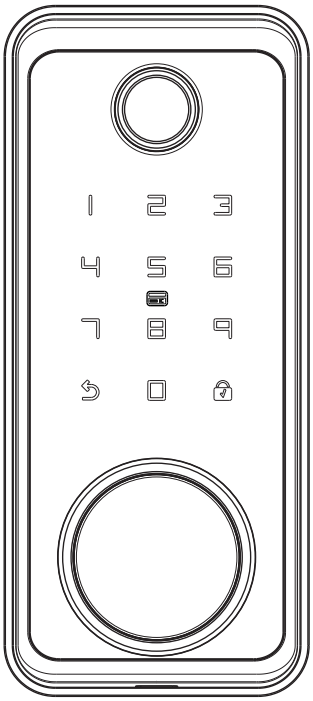

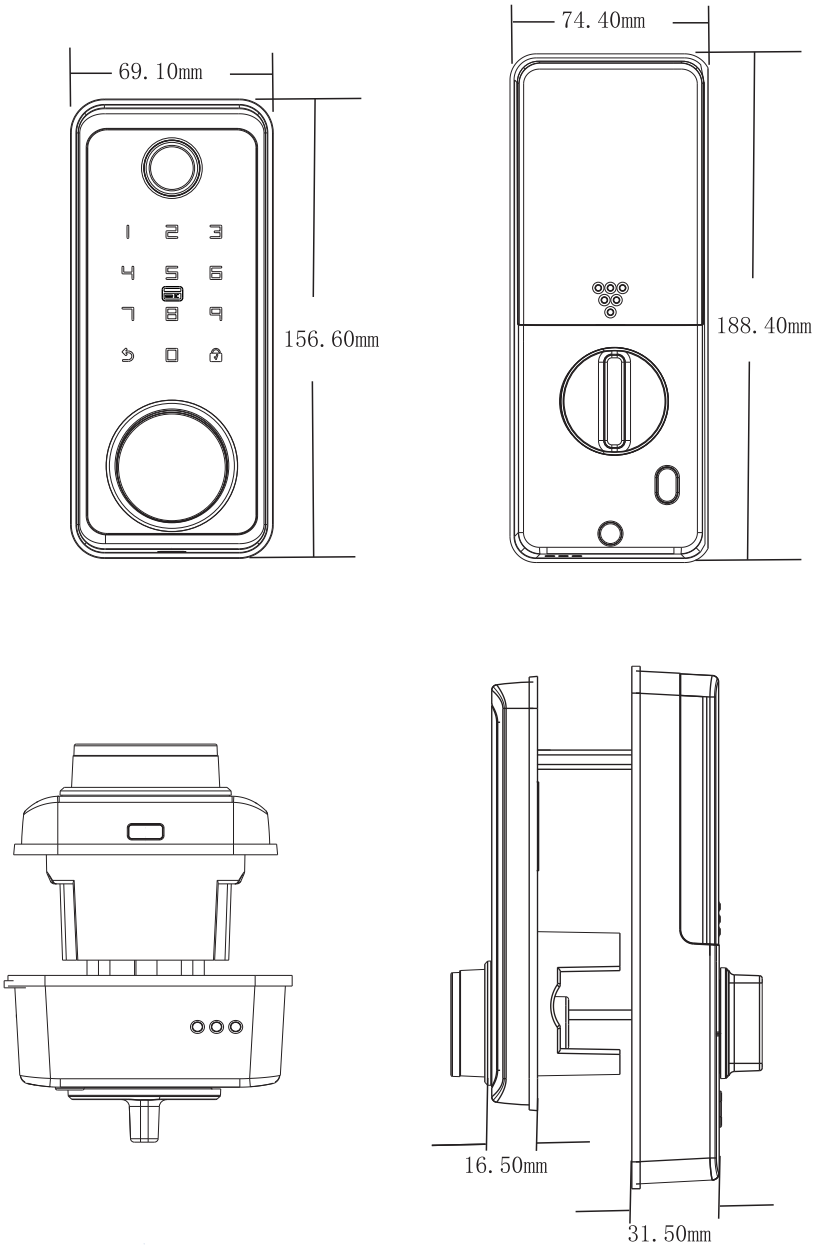
69.10mm
156.60mm
74.40mm
188.40mm
16.50mm
31.50mm

Important Notes

1. Please read this Installation Guide carefully and contact the Customer Care for any installation queries.
2. It is recommended that installation be carried out by a professional technician to prevent any potential service charges that can occur due to incorrect installation.
3. Four alkaline AA batteries (not included) are required to power on the device. Non-alkaline and rechargeable batteries are "**NOT RECOMMENDED**".
4. Do not remove the batteries from the lock while it is working.
5. Batteries must be replaced immediately when the lock prompts the □The battery is dead□ warning.
6. Mechanical keys are included for manual unlocking, Please store the keys in a secure location.

Table of Contents

What's in the Box.....1

Installation Diagram.....2

Installation Procedure.....2

1. Prepare Door for Installation.....2
2. *Drill Holes on the Door.....3
3. Install the Deadbolt.....4
4. Install the Strike Plate and Box.....5
5. Install the Outdoor Assembly.....5
6. Install the Mounting Plate.....6
7. Install the Indoor Assembly.....7
8. Physical Testing.....8
9. Install the Batteries and Cover.....8

What's in the Box

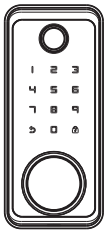

Exterior Assembly

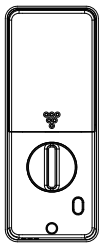

Interior Assembly

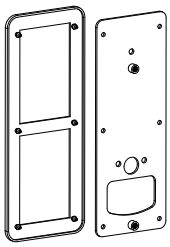

Mounting Plate

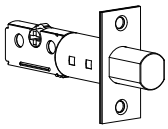

Deadbolt

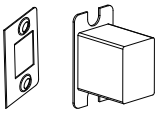

Strike Plate and Box

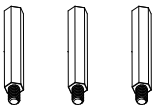

Studs

Keys

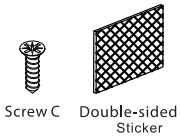

Mounting Plate (optional)

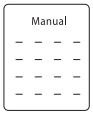

User Files

Screws A
Deadbolt/Strike

Screws B
Mounting Plate

Interior Assembly

Plug

Note: Screws for doors with a thickness of **35 to 55** mm are included in the standard package.

Installation Diagram

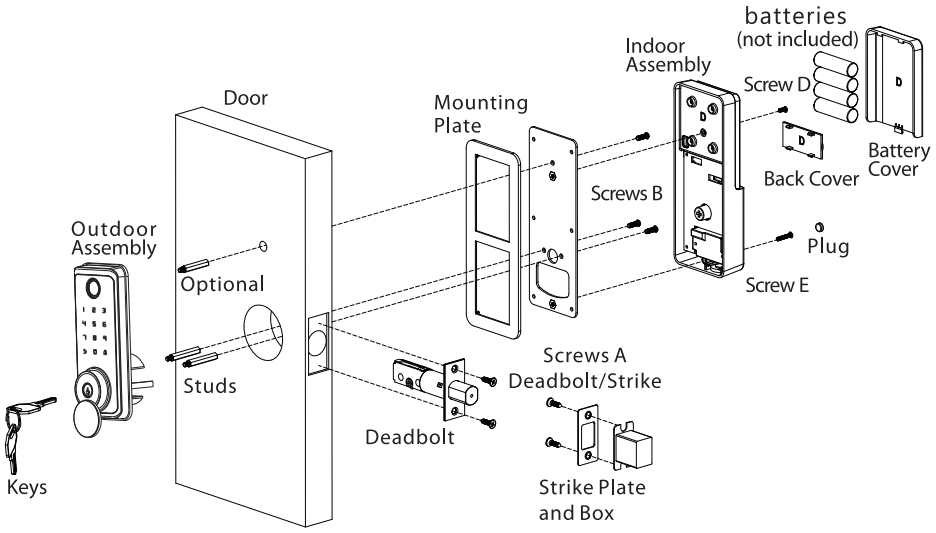

> ⚠ **Important Note**
>
> To stabilize the Outdoor Assembly, you can use either the provided Double-sided Tape or Stud. Stud requires an additional hole to be drilled.

Installation Procedure

1 Prepare Door for Installation

1. To ensure proper installation of the smart lock, make sure the following criteria are followed:
   - Check the door status. Make sure the doorframe is aligned with the door.
   - There are no obstructions stuck in the doorframe.
   - Leave enough space for the deadbolt to extend into the doorframe,when the door is locked.
2. Check your door/frame dimensions to make sure that they fit the following measurements:
   - **Diameter of Cross Bore:** 55 mm
   - **Backset:** 60 mm or 70 mm
   - **Diameter of Door Hole:** 25 mm
   - **Door Thickness:** 35 to 55 mm

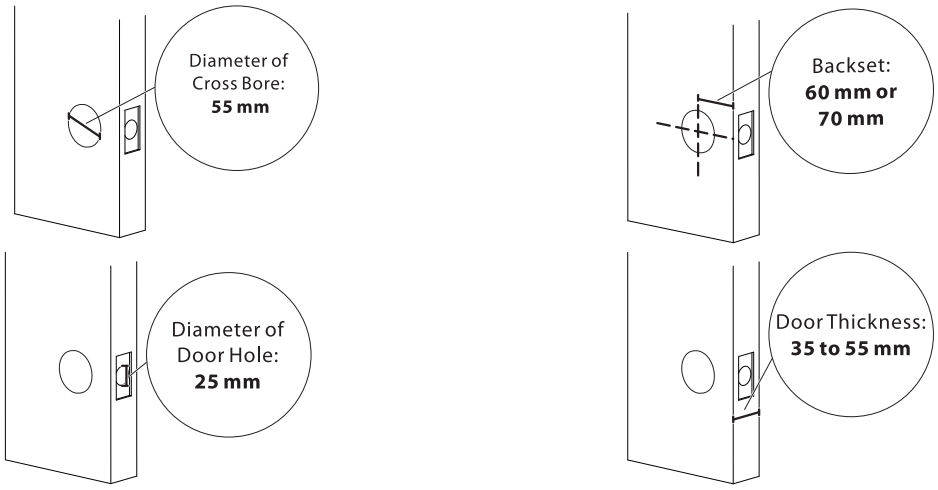

2 *Drill Holes on the Door

1. Place the Installation Template at the desired Cylinder height.
2. Mark for the holes to be drilled and drill the marked places.

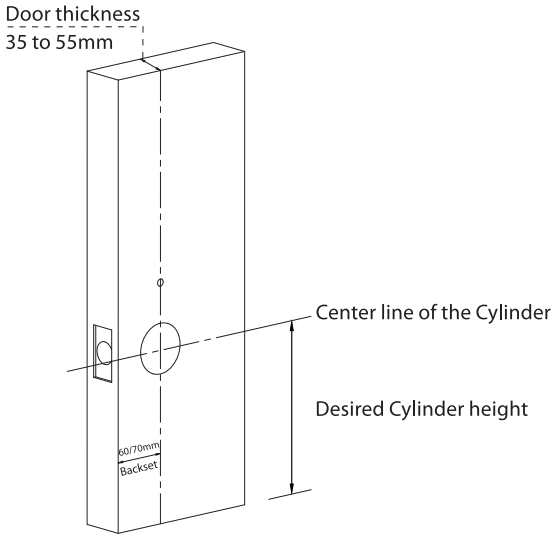

⚠ **Important Note**

It is not necessary to drill holes on the door. We have already provided Double-sided Tape in the kit to help with the stabilization of the lock during installation. If you still want to improve stability, use the mounting template to drill the holes.

3 Install the Deadbolt

1. Adjust ths Deadbolt(if needed)

①Measure your door's backset dimension whether 60mm or 70mm.

②Backset is the distance from the edge of the door to the center of the hole drilled on the door.

③You can hold the deadbolt in front of door hole,with the deadbolt face flush againsit the door edge.If the slotted hole centered in the door hole,the backset dimension is 60mm.IF not, the backset dimension is 70mm.

④The default Backset is 60mm, but if you want to adjust the Backset to 70mm, grasp body and twist the Faceplate as shown below:

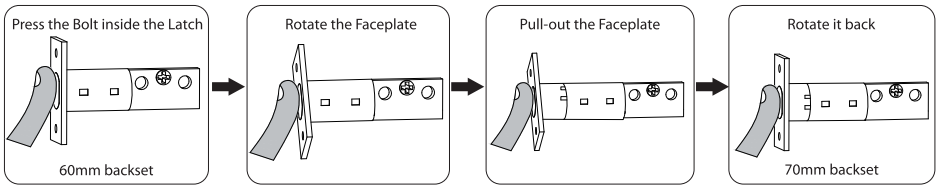

By default, the metal shaft twists over the center as shown:

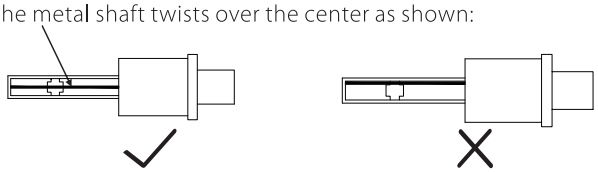

2.Before installing, make sure that the deadbolt is in the unlocked position and that the arrow is facing upwards.(the word"TOP"faces up as indicated on the deadbolt)

3.Screw into the doorframe with Screws A.

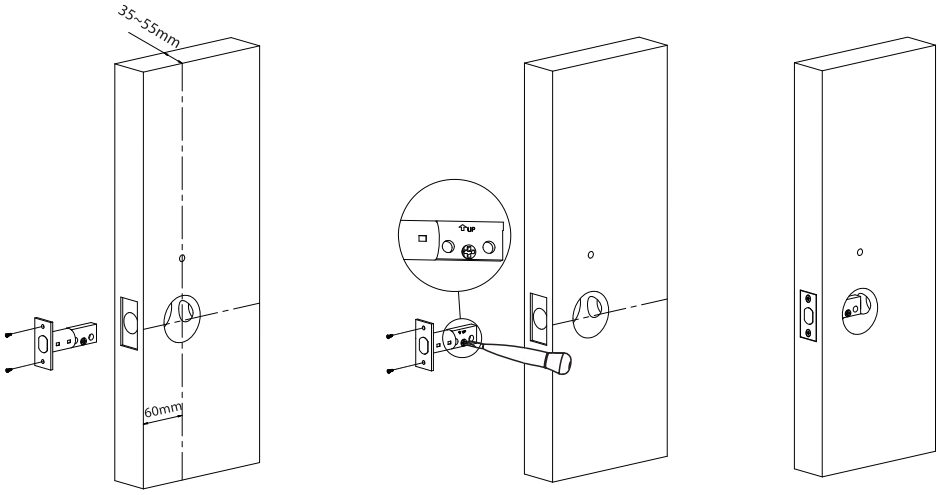

4.Use a screwdriver to test if deadbolt works smoothly.

4 Install the Strike Plate and Box

(If you have an existing strike plate installed, Skip this step)

1. Make sure that the Strike Box is aligned with the Deadbolt. Then, use the Installation Template to drill holes.
2. Align the Strike Plate and Box with the drilled holes and tighten them with **Screws A**.

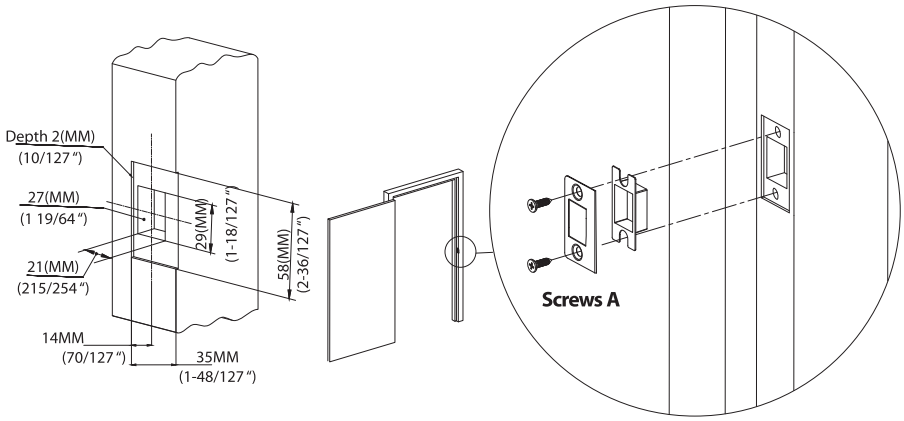

5 Install the Exterior Assembly

There are two methods to install the Assembly.

❖ Method 1: Installation with Stud

1. Place the Stud on the Mounting Plate of the Assembly.
2. Make sure the highlighted Spindle is in the **horizontal position**, as shown below.
3. Route the cable below the bolt ▪
4. Attach the Outdoor Assembly to the door by inserting the cable through the drilled holes.

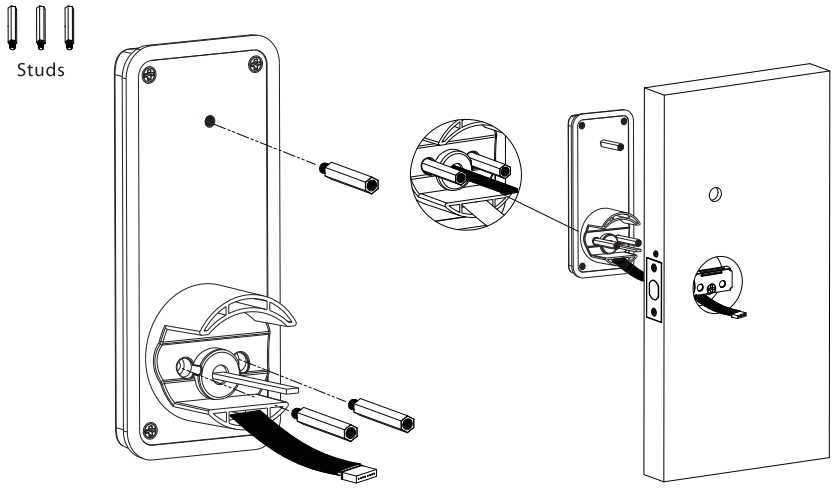

❖ Method 2: Installation with Double-sided Tape

1. Remove the double-sided tape from the outdoor assembly's mounting plate.
2. Make sure that the highlighted Spindle is in the **horizontal position**, as shown below.
3. Route the cable through the opening below the bolt.
4. Attach the Outdoor Assembly to the door by inserting the cable through the drilled holes.

Note: **The method of** installation **with stud is more stabilized, the Installation with Double-sided Tape is the second choice.**

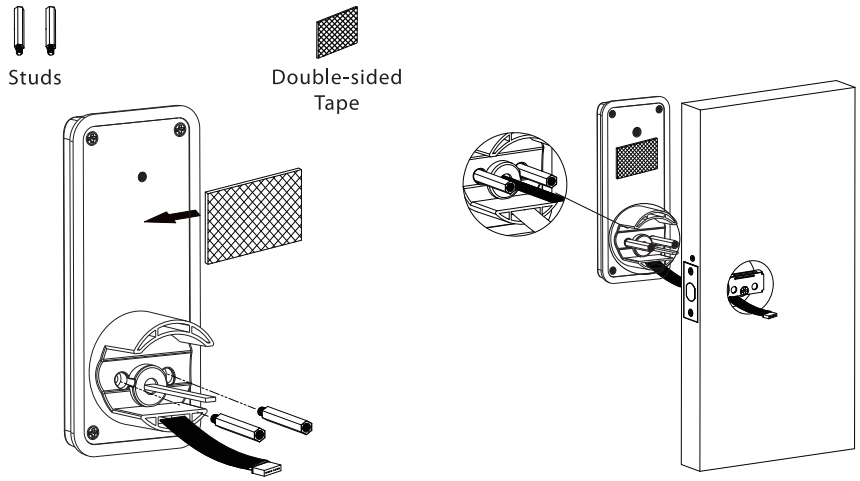

6 Install the Mounting Plate

According to the previously selected Outdoor Assembly Installation method in **Step 5**, choose the Mounting Plate installation method.

❖ Method 1: Installation with Stud

1. Route the cable through the hole on the Mounting Plate.
2. Place the Mounting Plate on to the door and use **Screws B** to secure them.

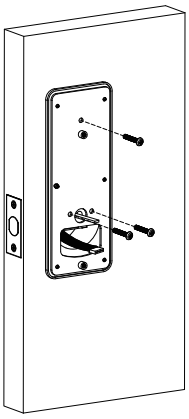

❖ Method 2: Installation with Double-sided Tape

1. Insert the cable through the Mounting Plate's hole.
2. Install the Mounting Plate on the door and fasten it with **Screws B** and **Screw C**.

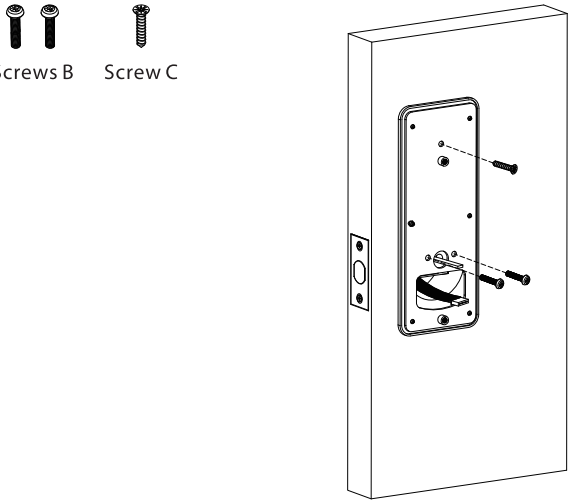

7 Install the Indoor Assembly

1. Connect the cable to the port on the back of Indoor Assembly.
2. Install the Indoor Assembly on the Mounting Plate in the proper location. Then attach the Indoor Assembly using **Screw D** and **Screw E**.

Note: No matter left or right opening direction, the knob dot must be vertical, after installing the batteries, please turn the knob dot to horizon.

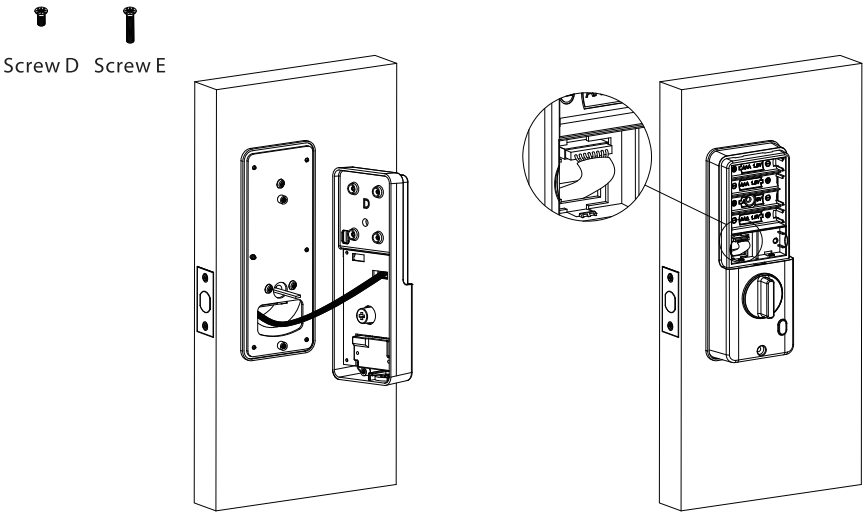

8 Physical Testing

1. Rotate the Knob to check if the Deadbolt works properly.
2. Insert the Key and rotate to check if the Deadbolt works properly.

Note: If the Knob or Key cannot control the Deadbolt correctly, please read the Installation Procedure carefully and re-install the lock.

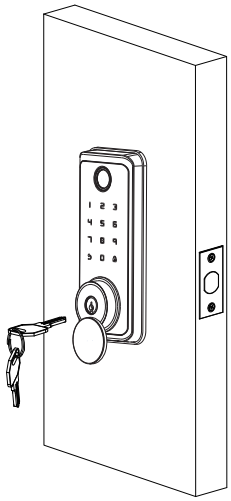

9 Install the Batteries and Cover

1. Insert four Alkaline AA batteries into the battery compartment and cover them with the battery cover.
2. Turn the KNOB to the horizontal position when the voice prompt "Di" appears and the ↩ button is solid on, then the voice "**Successful**" appears.
3. Enter 7 🔒 to enable **Auto Re-lock Mode** (if need).

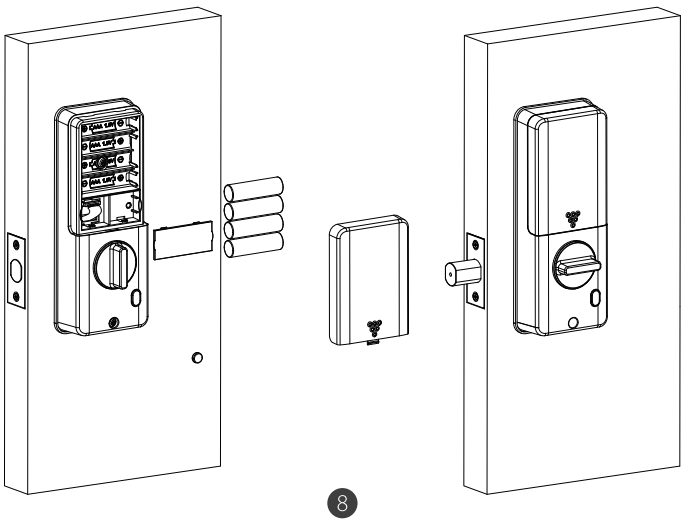

User Manual

Model: D0 2
Version: 1.0
English

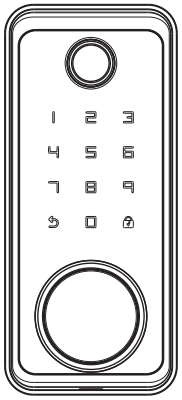

Product Overview

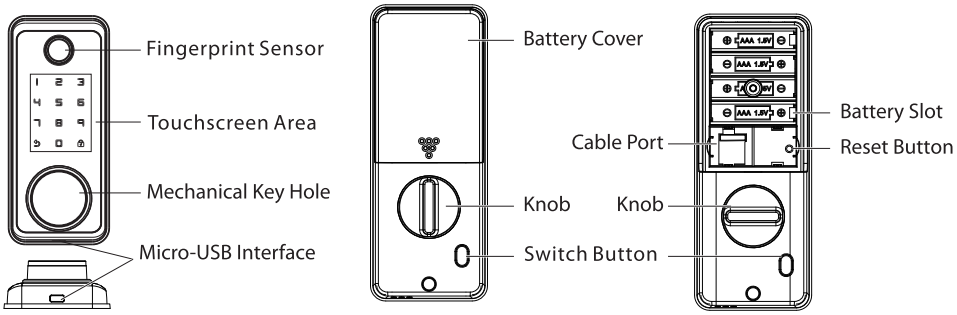

Important Notes

1. Please read this User Manual carefully or contact the Customer Care for any queries.
2. It is recommended that installation be carried out by a professional technician to prevent any potential service charges that can occur due to incorrect installation.
3. Please make sure no strong magnetic object closes to the smart lock.
4. Four alkaline AA batteries (not included) are required to power on the device. Non-alkaline and rechargeable batteries are "**NOT RECOMMENDED**".
5. Do not remove the batteries from the lock when it is working.
6. Batteries must be replaced immediately when the lock prompts the □The battery is dead□ warning.
7. For manual unlocking, the lock is also provided with mechanical keys. Please keep the keys in a safe place.
8. **Fingerprint positioning tips:**

   Recommended fingers: Index, middle, or ring fingers; avoid using the thumb or pinky, as it is difficult to accurately press onto the fingerprint reader using those.

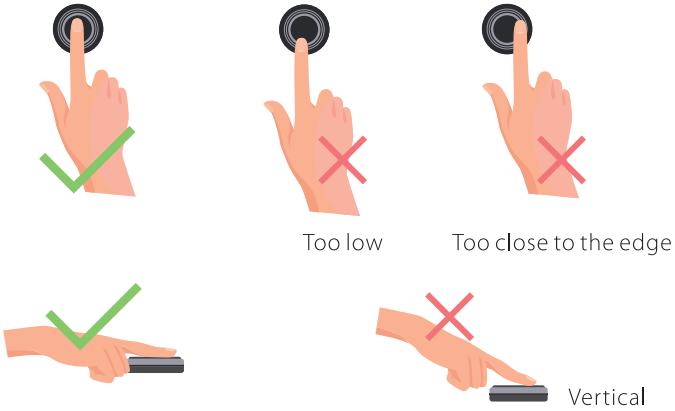

   Note: Please use the correct method when pressing your fingers onto the fingerprint reader for registration and identification. Our company will assume no liability for recognition issues that may result from incorrect usage of the product. We reserve the right of final interpretation and modification concerning this point.

9. After unlock by APP, fingerprint or password, please do not verify again.

Usage Notice

Note: Please prepare a Phillips screw driver and 4 AA batteries before installation. After installation, the initial status calibration and commissioning must be operated

1. In default setting, it can be unlocked Use fingerprints or mechanical key.
2. There will be a low power alarm when voltage below 4.8V, it can be only unlocked around 50 times, please replace with 4 new AA batteries in time. When batteries power running out, it can be unlocked by connecting a power bank with micro USB wire though emergency power port. Please note the APP network function will not work in this situation.
3. Please don't use any corrodent material to clean lock surface.
4. Please use mechanical key to unlock when the password and APP not work. Make sure your keys kept in outdoors safe place.
5. Suitable door thickness: 35～55mm.
6. Working temperature:-25℃～55℃.

Features

1. The password capacity is 100 , the first two users are administrators. Please input password as the first administrator.
2. Durable touching button.
3. Support volume adjustment(Mute/Low/High)and low power alarm.
4. Support 6-8 passwords and 16 virtual passwords.
5. Automatically open and lock door.
6. "↩": Return or Quit. '🔒': Confirm or Lock.

Name	Parameter
Unlock Way	Password,Key,fingerpringts,Ic Card and APP
System Capacity	300(Fingerprint 100,PassWord 100,IC cards 100)
Supply voltage	4.6V-6.4V
Low Voltage Alarm	4.8V
Standby current	<150uA

Usage Notice

① Calibrate The Initial Status

a. Please Stand in the room all the time when Calibrating.

b. Reset Lock: Long press 'Reset' button for 3 seconds, restore to the factory default settings.

C. Calibrate the Door Open Direction When the voice prompt 'Di',the " ⮌ " button is always bright, turn the KNOB to the horizontal position, the voice prompt 'successful'.

Note: If calibrate failure, the" ⮌ "button is always bright, please turn the KNOB to the horizontal position again or turn down harder.

d. **Calibrate the Door Close Position**: Close the door, and press '7 ' 🔒 , automatically calibrate the door close position.

② Commissioning

a. Please Stand in the room all the time when commissioning.

b. " 🔒 "button: Short press, the bolt stretch out;

c. Fingerprint/ Password Unlock, the bolt retract.

d. 'Switch' button: Short press the bolt stretch out or retract.

e. KNOB: Rotate, the bolt stretch out or retract.

f. Any way fingerprint/ password / IC card/ switch'button/ knob unlock, then close the door,the atch will stretch out to lock automatically.

g. Verify other function includes Self--lock,anti- peeping password, 'Reset' button, APP work well or not.

Device Operation

Note: **After the first hardware installation, be sure to restore the factory settings. Press and hold the reset button in the lower right corner of the battery compartment for 5 seconds.For your convenience, please add an administrator first.**

How to Add Fingerprints, Passwords, and Fobs Cards

Important Notes:
a. For your convenience, please add an administrator first .
b. The local input fingerprint, password, and Fobs card can all be administrators.
c. The first three users are administrators.
When an administrator has been added, you need to verify the administrator code when adding other users.

Press "2" + "🔒" to add:

① Add Fingerprint: Enter your fingerprint as prompted. Each fingerprint need to be entered 3 times. Note that to ensure the integrity of the fingerprint, you should enter a different part of your fingerprint each time.
② Add Password: Enter a 6-digit password. Password registration needs to be entered 2 times.
③ Add Fobs Card: Hold the Fobs card close to the card sensing area until you hear a sound indicating success.
④ Press the "↩" key to quit adding users.

How to Delete Fingerprints, Passwords, and Fobs Cards

Deletion of user permissions is not available on the device . If you intend to delete the user's fingerprint, password, card and other permissions, please operation on the App. Enablethe App, click on "Settings",then, click "Fingerprint Management", "Password Managent" or "Card Managent" to delete.

Other Functions

① Normal Open Mode（when the lock is off）
Press "3" + "🔒" to enter the Normal Open mode. (Operation timeout: 10 seconds) If you have added an administrator, it requires verification of administrator information. Press the "🔒" key to quit the Normal Open mode.
②Voice Language Switch
Press "4" + "🔒" to switch the voice language between Chinese and English. (Operation timeout: 10 seconds)
③ Volume Adjustment
Press "5" + "🔒" to enter volume setting.(Operation timeout: 10 seconds).

press "0" + "🔒" to mute the sound;
press "1" + "🔒" to choose the lowest volume;
press "2" + "🔒" to choose low volume;
press "3" + "🔒" to choose normal volume;
press "4" + "🔒" to choose the highest volume.

④Factory Reset
Method 1: Press and hold the reset button in the lower right corner of the battery compartment for 5 seconds to restore factory settings.
Method 2: Press "6" + "🔒" to enter the factory reset after disconnecting all Bluetooth pairings. (Operation timeout: 10 seconds).
Note: After thTUYA App）is operation, the data entered in the app will all be invalid.（If your lock has connect .

APP Operation

Note: After the first hardware installation, be sure to restore the factory settings.Press and hold the reset button in the lower right corner of the battery compartment for 5 seconds.

Preparations

①Download TUYA App: Scan the following QR code to download and install the TUYA App.

②Register Account:Registering an account is necessary before using the TUYA App for the first time.You can follow the APP prompts for user registration.

How to Connect to TUYA App

a. Turn on the Bluetooth and location on your smartphone.
b. Open the App and click the "+" in the upper right corner to add the device.
c. Wake the lock, press "1" + "🔒" to enter Bluetooth pairing. (Operation timeout: 60 seconds)
d.If the pairing fails, turn off the Bluetooth and wait a few minutes, then repeat the step1、step2、step3. You can also click the blue word"pairing mode" on the App to get more help information.

App function of control smart lock

①Member Management: Add family members and other members

②Wrong Password Alarm: View the wrong access code records

③Unlocking Records:View family members' unlocking

④Add and delete user information for lock: fingerprint management、 cards management、passwords management
⑤Change The Voice Volume

⑥Obtain Dynamic Password

⑦Unlock within Bluetooth range

NOTE:
1、After battery change or power outage, other members cannot unlock the door until the administrator reconnects to the app andrefreshes（connected to App）.
2、If you have connected the App，Device operation "2+ 🔒" （user management） will not available.You can manage user information on the app.
3、A lock can only be paired with one phone，Bluetooth pairing "1 + 🔒 "will not work when the lock has already been paired with a phone.You can share administrator permissions to your family on the App.

FCC WARNING

This device complies with part 15 of the FCC Rules. Operation is subject to the following two conditions: (1) this device may not cause harmful interference, and (2) this device must accept any interference received, including interference that may cause undesired operation.

Any changes or modifications not expressly approved by the party responsible for compliance could void the user's authority to operate the equipment.

NOTE: This equipment has been tested and found to comply with the limits for a Class B digital device, pursuant to Part 15 of the FCC Rules. These limits are designed to provide reasonable protection against harmful interference in a residential installation. This equipment generates, uses and can radiate radio frequency energy and, if not installed and used in accordance with the instructions, may cause harmful interference to radio communications. However, there is no guarantee that interference will not occur in a particular installation. If this equipment does cause harmful interference to radio or television reception,

which can be determined by turning the equipment off and on, the user is encouraged to try to correct the interference by one or more of the following measures:

-- Reorient or relocate the receiving antenna.

-- Increase the separation between the equipment and receiver.

-- Connect the equipment into an outlet on a circuit different from that to which the receiver is connected.

-- Consult the dealer or an experienced radio/TV technician for help.

To maintain compliance with FCC's RF Exposure guidelines, This equipment should be installed and operated with minimum 20cm distance between the radiator and your body: Use only the supplied antenna.