CHILDREN'S
ELECTRIC SWING CAR

Model: FX-E233

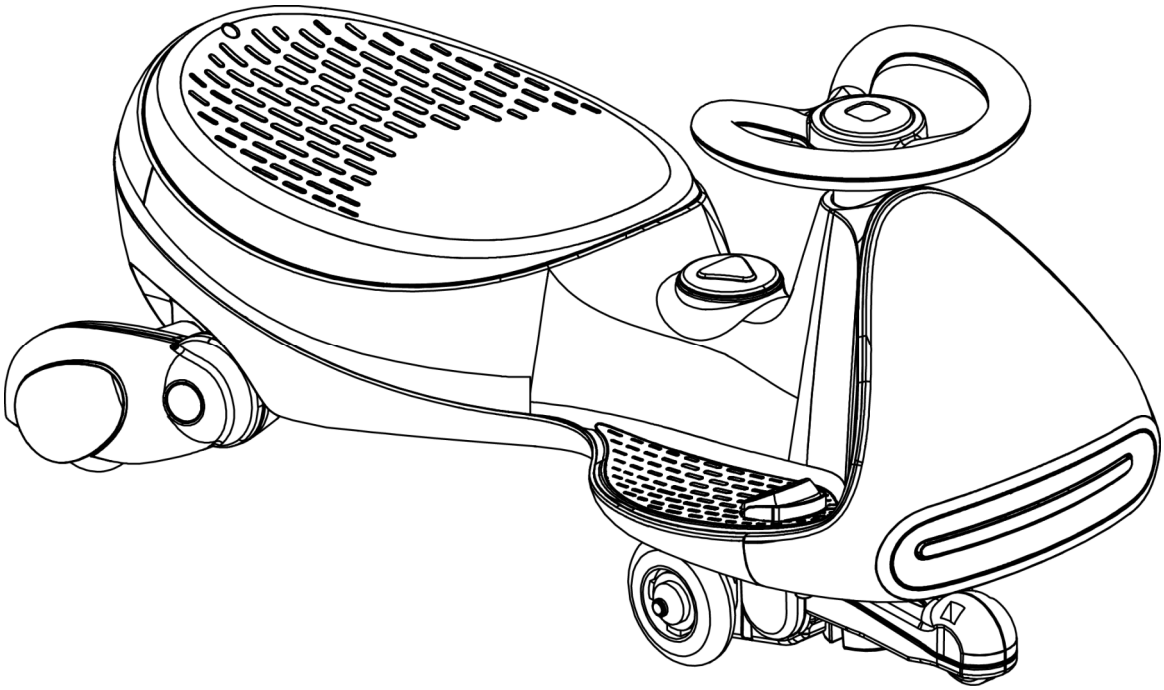

ASTM-F963

⚠ WARNING!

Products should be assembled by an adult. Protective equipment should be worn. Not to be used in traffic. Not suitable for children under 3 years. Choking hazard- small parts. In unassembled state, contains potentially hazardous small parts. Please keep out of the reach of small children. Pay attention to the potential hazards of using the toy in areas other than private grounds.

About Your New Vehicle

⚠ WARNING!

It should be used under adult guidance.

Parents should ensure that children have taken the safety measures before use.

The toy should be used with caution since skill is required to avoid

falls or collisions causing injury to the user or third party.

Battery:	6V 4.5Ah X1 / 12V 4.5AhX1
Material:	PP 、PU
Suitable age:	3^+ years
Load Capacity:	Max 150lbs
Size of car:	76X34X41.5cm
Speed:	1.9-4mph
Charging time:	4-6 hours
Charger:	INPUT: 100-120V OUTPUT: 6V DC 500mA / INPUT: 100-240V OUTPUT: 12V DC1A
Fuse:	Auto-reset fuse

Safety Information

⚠ WARNING!

• General safety:

• Where products need assembly they must always be assembled by an adult.As a parent/carer, it is also your responsibility to check the tightness of screws, nuts and bolts before each use and if necessary, adjust and re-tighten.

• This product may contain small parts and it is your responsibility as a parent/carer to exclude children from the area during assembly due to small parts.

• Remove protective material and poly bags and dispose of them responsibly before giving the assembled product to your child.

• Remember to retain these instructions for future reference.

Positioning :

- Do not allow your child to ride at night or in poor light conditions.
- Do not let your child play near steps, swimming pools / spas or other sources of water, on slopes,on streets or around cars, even if parked on your own property.
- It is prohibited to drive/use this product on the public roads.
- This product is designed to be used on smooth surfaces and should not be used on soft ground or in the rain or snow. May not be suitable for carpet driving.

Before use:

• **Very Important ! You Must Charge The Battery Fully Before The First Use.**

• Dispose of all packaging material responsibly before giving this product to your child.

• Check tightness of all components before giving this product to your child.

During use:

- This product is only suitable for children 3 years and older.
- The toy should be used with caution since skill is required to avoid falls or collisions causing injury to the user or third parties.
- The maximum rider weight capacity for this product is 150lbs. Overload may damage this product.
- Adult supervision is highly recommended when children play with wheeled toys. Please take care of your child.
- Do not allow the child to ride with bare feet or without suitable footwear.
- Ensure the child keeps clothing, hands, hair,fingers and feet away from moving parts.
- The use of protective gear including approved helmets, gloves and pad is recommended.
- Store this product at room temperature; do not leave it outside or uncared for.
- Never let any child play with the battery or charger at any time, or let them charge the product.
- Do not use if product is faulty or damaged.
- Do not tamper with the battery or electrical parts inside the product.

Safety Information

⚠WARNING!

- **Charging the battery:**

- All charging and re-charging must be carried out by an adult.
- Do not attempt to use the product while it is being charged. When charging, all the functions will be cut off.
- Charging should be carried out under cover and in a well-ventilated area.
- Make sure the vehicle is powered off while charging.
- Always ensure the charger is plugged into a wall outlet .Do not use an extension.
- Do not charge near sources of potential sparks, fires or flames or where flammable gases, liquids and materials are stored.
- During charging the battery and the charger may get hot.
- Only charge the battery for a maximum time of 20 hours.
- Always ensure that once the battery becomes discharged/flat that you re-charge for the recommended time. Failing to do so will significantly shorten battery life.
- Charging the product below 4°C (40°F) or above 40°C (104°F) will decrease the battery life significantly.
- V.R.L.A. batteries are heavy and contain lead & acid. They are dangerous if improperly handled.
- Only use the charger supplied with the product.The use of other chargers may cause damage to the battery and/or cause explosion.
- Battery chargers used with the toy are to be regularly examined for damage to the cord, plug,enclosure and other parts, and in the event of such damage, they must not be used until the damage has been repaired.
- Only use the battery supplied with this product.The use of other batteries may cause damage to the motor, charger and subsequent wiring,which could lead to fire and/or explosion.
- Never short-circuit the terminals of the battery,or any subsequent wiring.
- Never bypass or bridge a broken/blown fuse or circuit breaker and always replace with the same type/value and model.

Parts List

PART NO	PART NAME	PICTURE	Q'ty (pcs)	REMARKS	PART NO	PART NAME	PICTURE	Q'ty (pcs)	REMARKS
1	Vehicle body	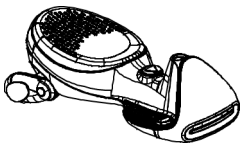	1		2	Bogie	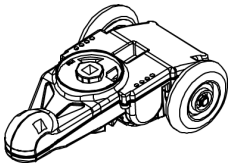	1	
3	Square tube	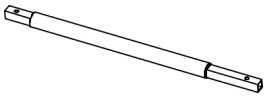	1		4	Steering wheel	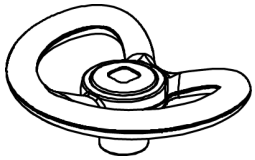	1	
5	M5X38 Bolt		2		6	M5 Nut		2	
7	Instruction manual	CHILDREN'S ELECTRIC SWING CAR WARNING!	1		8	Charger	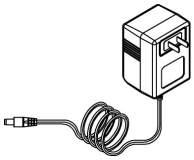	1	

Parts Diagram

1	Vehicle body ∗1	2	Bogie ∗1
3	Square tube ∗1	4	Steering wheel ∗1
5	M5X38 Bolt ∗2	6	M5 Nut ∗2

Tools Required

Screwdriver(not included)

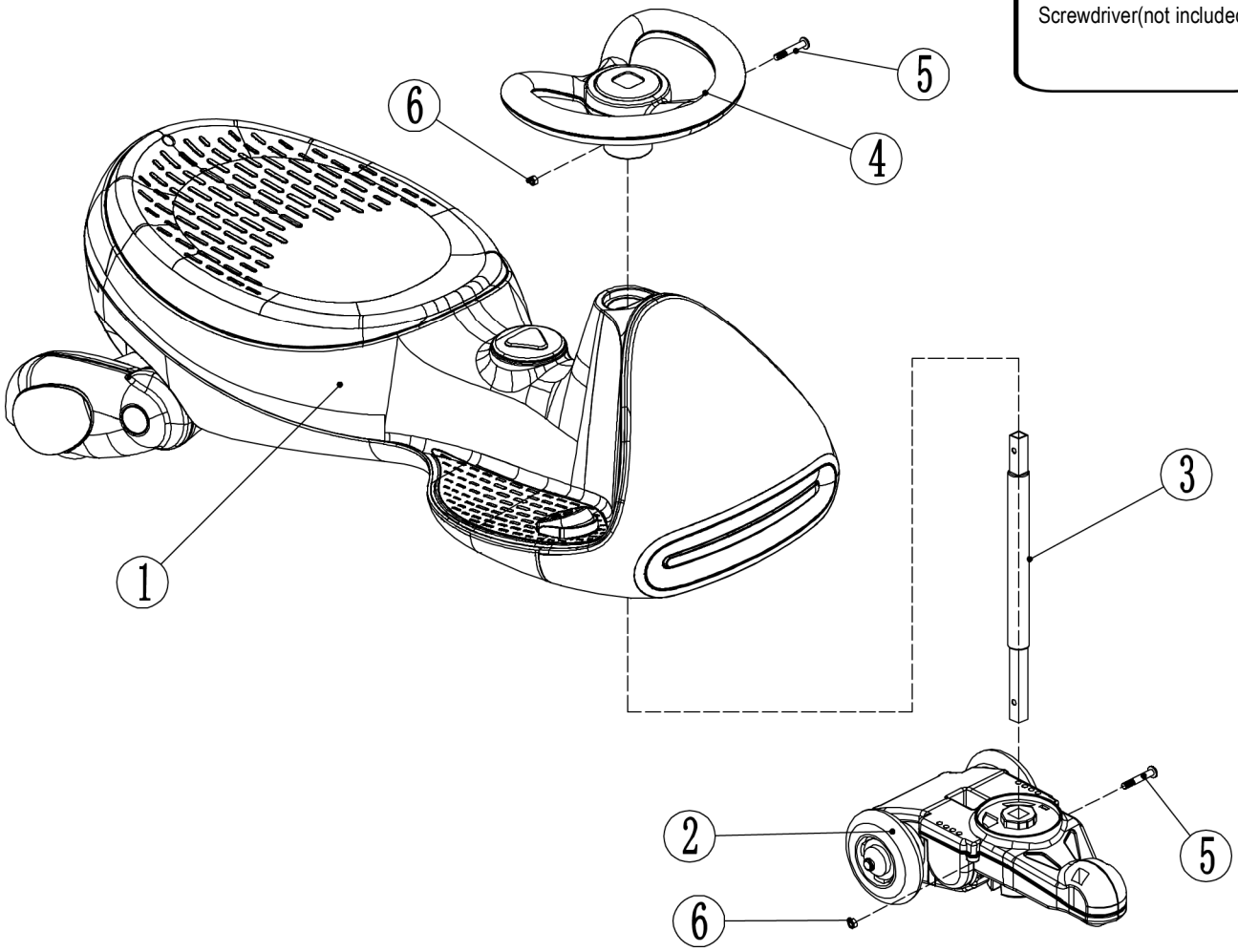

Assembly Steps

1.Install the square tube and bogie.

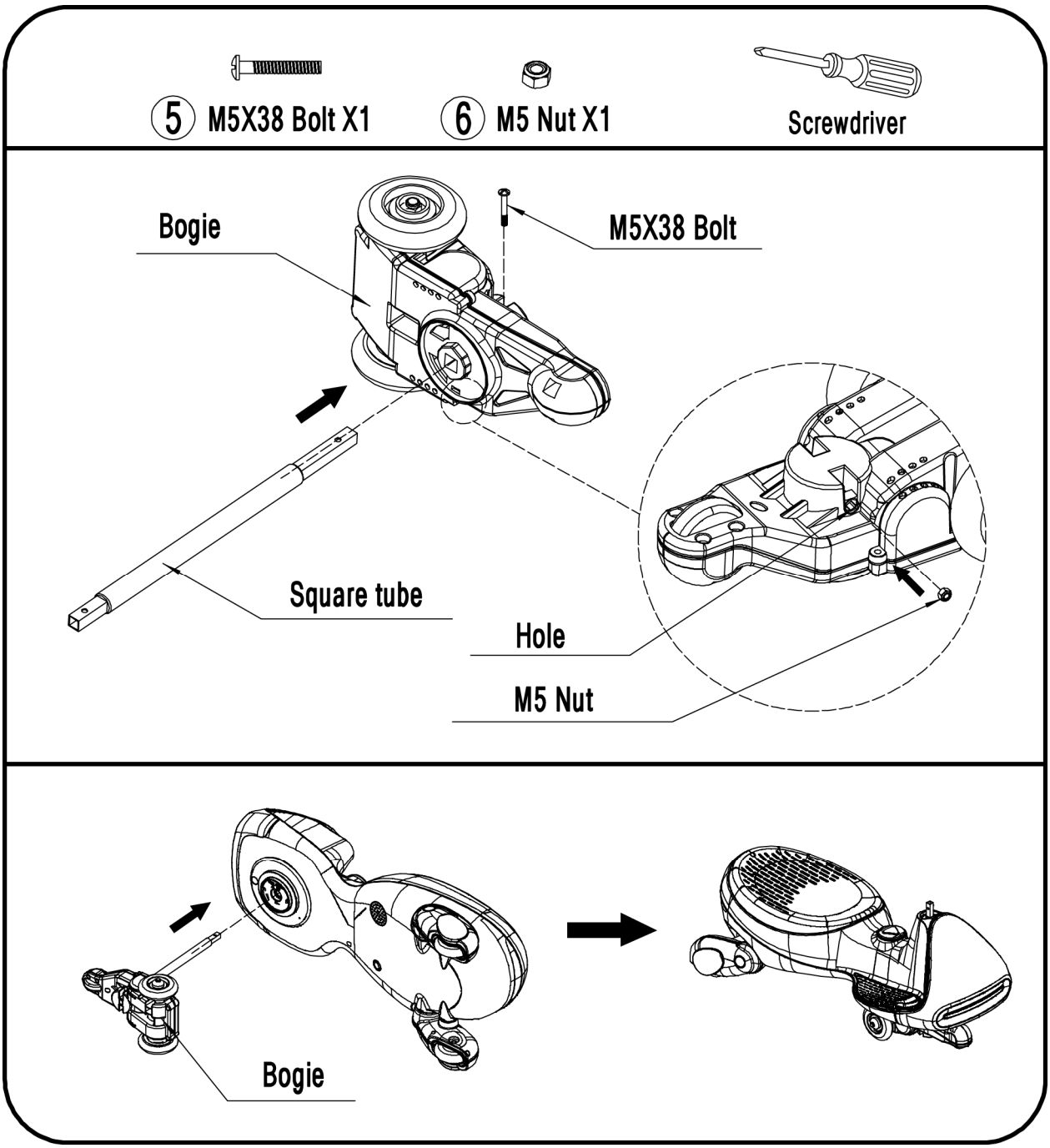

- As shown in the picture, remove the nut and bolt from the square tubel.
- As shown in the picture, install the nut to the hole.
- As shown in the picture, insert the square tube into the bogie, align the hole of the square tube with the hole of the bogie, put a bolt through the holes, and fasten the nut.
- As shown in the picture, insert the pipe above the bogie into thecircular hole in the front of the vehicle body.

Assembly Steps

2.Install the steering wheel.

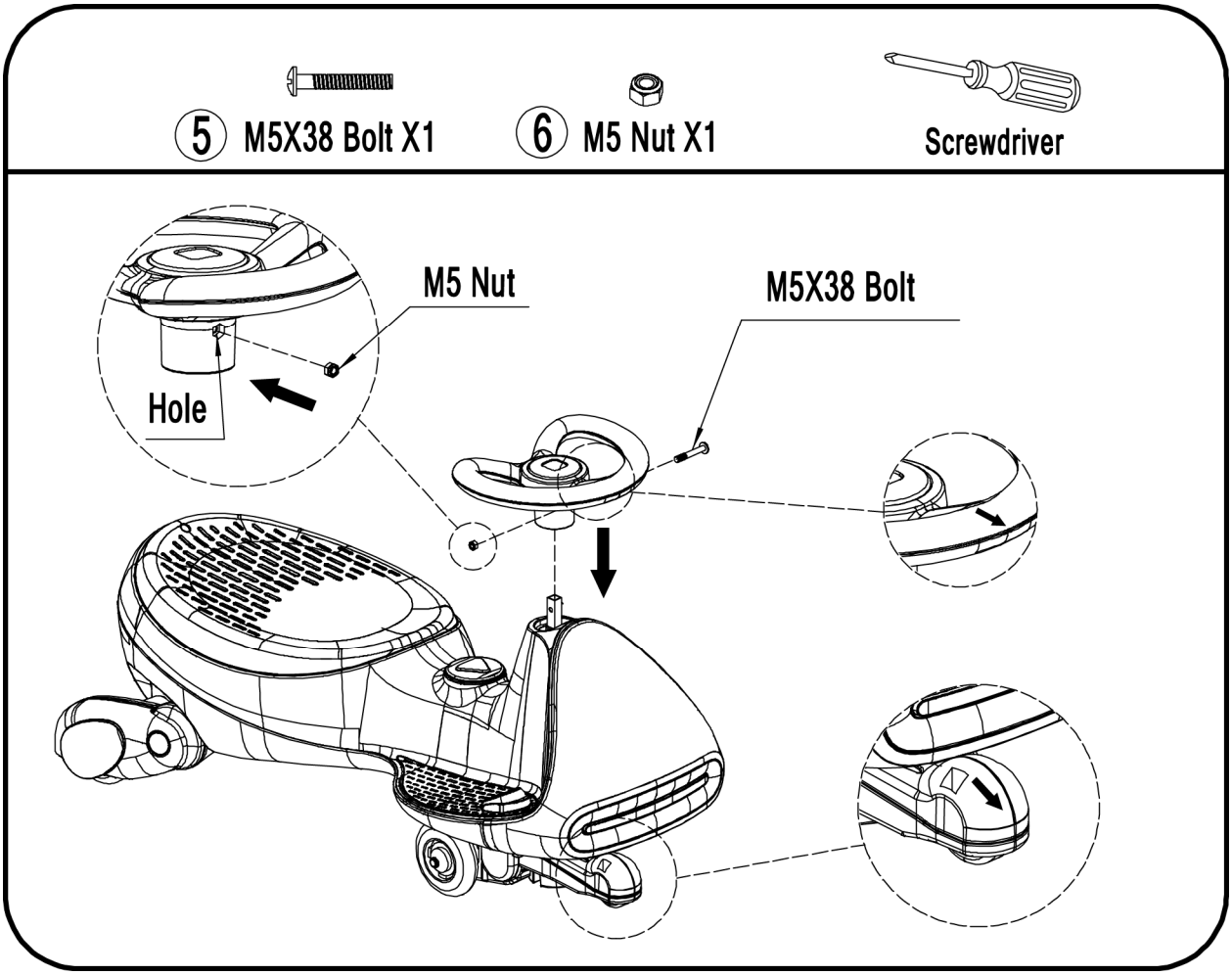

- As shown in the picture, install the nut to the hole.
- Insert the steering wheel to the end of the square tube and align the hole.
- Put the bolt through the hole, and fasten the nut.

NOTE:

The Arrow on the bogie and steering wheel points.

How To Operate Your Vehicle

Use Manual(Ensure the power switch has been turned on)

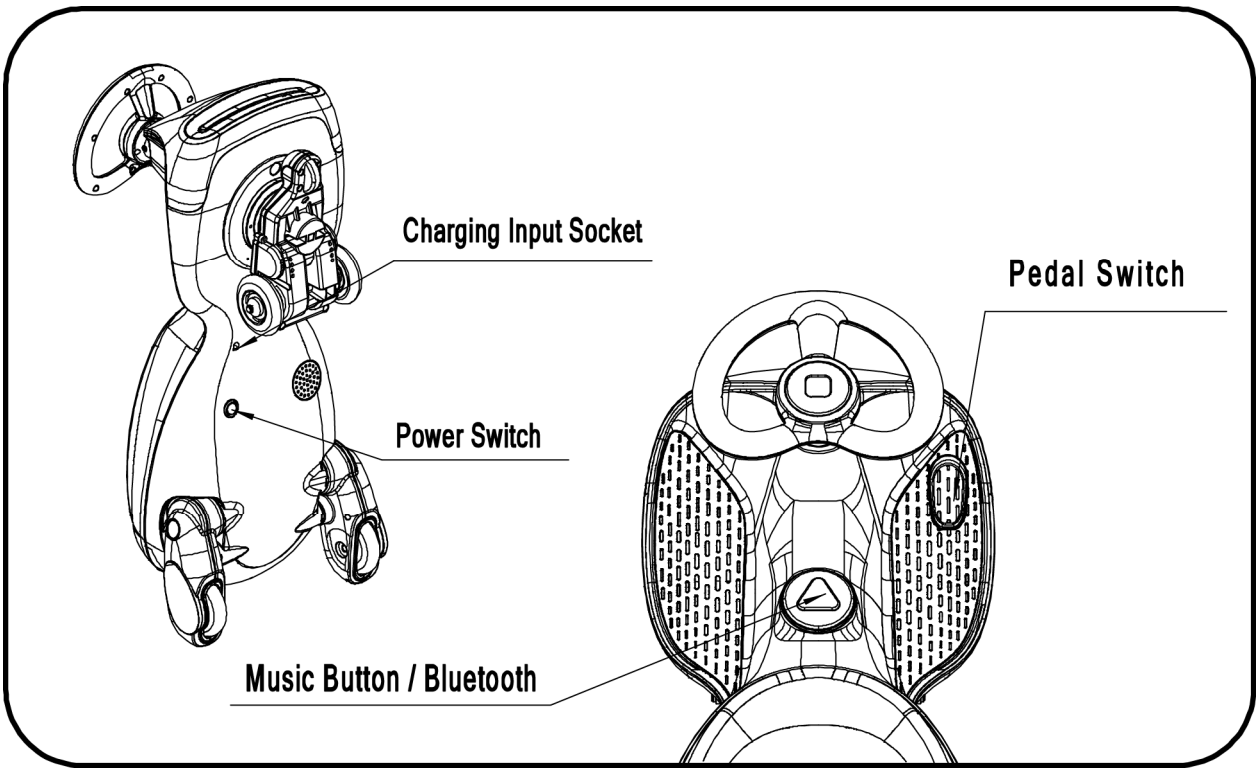

(1) Turn on the power switch.

(2) Forward

Hold the steering wheel in the forward direction. Press the pedal switch. The vehicle will drive forward.

(3) Stop

Release the pedal, then the motor will stop engaging. The vehicle will stop gradually.

(4) Reverse

Turn the steering wheel 180° to make it face backward. Then press the pedal switch to make the vehicle go reverse.

(5) Music function

Turn on the general power switch, then press the music button to play the preset songs. Short press the music button to skip songs, long press to disable music.

(6) Bluetooth (Name:nemo-007)

Music starts, double click to turn on Bluetooth, prompt Bluetooth turn on sound.

IMPORTANT!

Always stop the vehicle first before changing the direction to avoid rollover and damage to the gear box and motor.

Not recommended to ride on carpet, grass, gravel and other 'rough' surfaces, which will diminish the toy's ability to propel forward.

How To Operate Your Vehicle

FCC Statement:
This device complies with part 15 of the FCC Rules. Operation is subject to the following two conditions:
(1) This device may not cause harmful interference, and
(2) this device
must accept any interference received, including interference that may cause undesired operation.
This equipment has been tested and found to comply with the limits for a Class B digital device, pursuant to part 15 of the FCC Rules. These limits are designed to provide reasonable protection against harmful interference in a residential installation. This equipment generates, uses and can radiate radio frequency energy and, if not installed and used in accordance with the instructions, may cause harmful interference to radio communications. However, there is no guarant ee that interference will not occur in a particular installation. If this equipment does cause harmful interference to radio or television reception, which can be determined by turning the equipment off and on, the user is encouraged to try to correct the interference by one or more of the following measures:
—Reorient or relocate the receiving antenna.
—Increase the separation between the equipment and receiver.
—Connect the equipment into an outlet on a circuit different from that to which the receiver is connected.
—Consult the dealer or an experienced radio/TV technician for help.
Caution: Any changes or modifications not expressly approved by the party responsible for compliance could void the user's authority to operate the equipment.
This equipment complies with FCC radiation exposure limits set forth for an uncontrolled environm ent. This transmitter must not be co-located or operating in conjunction with any other antenna or transmitter.

IC Statement:
This device complies with Industry Canada’s licence‐exempt RSSs. Operation is subject to the following two conditions:
(1) This device may not cause interference; and
(2) This device must accept any interference, including interference that may cause undesired operation of the device.
Le présent appareil est conforme aux CNR d'Industrie Canada applicables aux appareils radio exempts de licence. L'exploitation est autorisée aux deux conditions suivantes : (1) l'appareil ne doit pas produire de brouillage, et (2) l'utilisateur de l'appareil doit accepter tout brouillage radioélectrique subi, même si le brouillage est susceptible d'en compromettre le fonctionnement.

Charging Your Vehicle

- The charging input socket is **at the bottom of the car.**
- The **POWER SWITCH** must be turned in **OFF** position when charging.
- Before the first use, first use, please fully charged. Do not recharge the battery for more than 20 hours to avoid overheating the charger.
- After each use or at least once a month when not in use, recharge the battery one time.

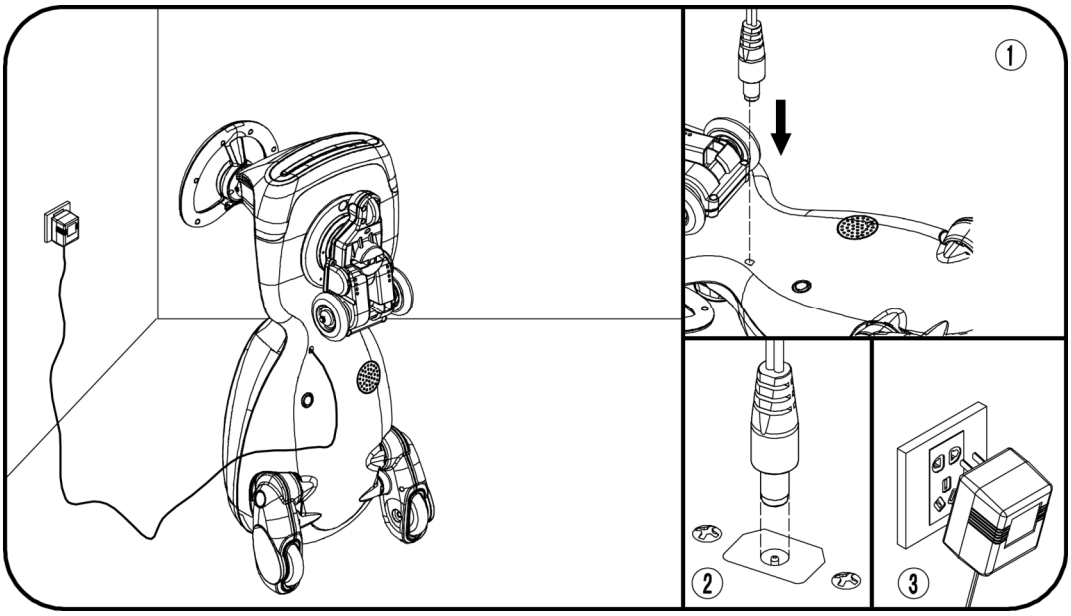

1. Find the charging input socket at the bottom of the car.
2. Turn off the power switch, then plug the charger port into the input socket;
3. Plug the charger plug into the wall outlet. The indicator light on the charger will turn red and the battery will begin to recharge.

⚠ WARNING!

- **PREVENT FIRE AND ELECTRIC SHOCK:**
  - Use the only rechargeable battery and charger supplied with your vehicle. NEVER substitute the battery or the charger with another brand. Using another battery or charger may cause a fire or explosion.
  - Do not use the battery or charger for any other product. Overheating, fire or explosion could occur.
  - NEVER modify the electric circuit system. Tampering with the electric system may cause a shock, fire or explosion or my permanently damage the system.
  - Do not allow direct contact between battery terminals. Fire or explosion can occur.
  - Do not allow any type of liquid on the battery or its components.
  - Do not charge near heat or flammable materials. Charge the battery in a well-ventilated area ONLY.
  - Charge the battery in a dry area ONLY.
- Do not open the battery. Battery contains lead acid and other materials that are toxic and corrosive.
- Do not open the charger. Exposed wiring and circuitry inside case may cause electric shock. Only adults may handle or charge the battery. NEVER allow child to handle or charge the battery. Battery is heavy and contains lead acid (electrolyte).
- Do not drop the battery. Permanent damage to the battery could occur or cause serious injury.
- Before charging the battery, check for wear or damage to the battery, charger, its supply cord and the connectors. DO NOT charge the battery if any damage to parts has occurred.
- Do not allow the battery to drain completely. Recharge the battery after each use or once a month if not used regularly.
- Do not charge battery upside down.
- Always secure the battery with the bracket. Battery can fall out and injure a child if vehicle tips over.
- A recommendation for adult supervision of young children.
- The toy should be used with caution since skill is required to avoid falls or collisions causing injury to the user or third parties.

Troubleshooting Guide

Type of fault	Type of Analysis of causes	Solutions
The car can't move	The battery is below normal level Safety protection of line The screw on the wheelshas fell off The battery connectorhas fell off The battery is damaged The electrical equipmentis damaged The motor is damaged	Charge the battery Wait for a moment Tight the screw again Come on again Change the battery Bring it to repair Contact the seller
The battery can't be charged	Battery connector has fell off Battery charger is powered off Battery charger is damaged	Plug into again Plug into again Change the batterycharger
Running distance per charge is short	Battery is not full Battery is old	Charge the batteryagain Change the battery
There is noise and heat when charge the battery	Chemical reaction	It is normal
The speed is low	Battery is old Battery is out of power Over weight Driving on uneven road	Change the battery Charge the battery again Lighten the weight toless than 150lbs. Step on the pedal for 6-8 seconds to reach the maximum speed Driving on flat road
Type Type of faultfault	The gear is broken	The gear Bring it to repair broken
If you can't solve the problem, please feel to contact us.		

Maintaining Your Vehicle

- It is parents' responsibility to check main parts of the toy before using, Must regularly examine for potential hazard, such as the battery, charge, cable or cord, plug, screws are fastening enclosure of other parts and that in the event of such damage, the toy must not be used until that damage had been properly removed.
- Make sure the plastic parts of the vehicle are not cracked or broken.
- Occasionally use a lightweight oil to lubricate moving parts such as wheels.
- Park the vehicle indoors or cover it with a tarp to protect it from wet weather.
- Keep the vehicle away from sources of heat, such as stoves and heaters. Plastic parts may melt.
- Recharge the battery after each use. Only an adult can handle the battery. Recharge the battery at least once a month when the vehicle is not being used.
- Do not wash the vehicle with a hose. Do not wash the vehicle with soap and water. Do not drive the vehicle in rainy or snowy weather. Water will damage the motor, electric system and battery.
- Clean the vehicle with a soft, dry cloth. To restore shine to plastic parts, use a non-wax furniture polish. Do not use car wax. Do not use abrasive cleaners.
- Do not drive the vehicle in loose dirt, sand or fine gravel which could damage moving parts, motors or the electric system.
- When not in use, all the electrical source should be turned off. Turn off the power switch and disconnect the battery connection.

Disposal Of Battery

Disposal Of Battery

- Your sealed lead-acid battery must be recycled or disposed of in an environmentally sound manner.
- Do not dispose of your lead-acid battery in a fire. The battery may explode or leak.
- Do not dispose of a lead-acid battery in your regular, household trash. The incineration, land filling or mixing of sealed lead-acid batteries with household trash is prohibited by law.
- Return an exhausted battery to your local approved lead-acid battery recycle, such as a local seller of automotive batteries.
- Contact your local waste management officials for other information regarding the environmentally sound recycling and disposal of lead-acid batteries.

⚠ WARNING!

CHOKING HAZARD-Small parts.
Not for children under 3 years.

CHIZHOU FANGXI TOY TECHNOLOGY CO.,LTD.
No. 01,Jianshe Road,Matang Industrial Zone,Dingqiao Town,
Qingyang County, Chizhou City, Anhui Province,China

Made in China

The car is suitable for ASTM F963 CPSIA standard.