USER'S MANUAL

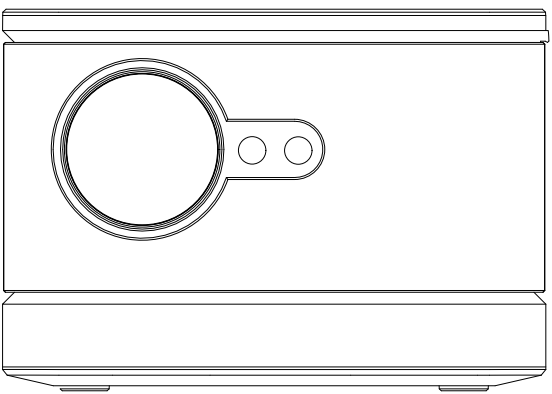

Important safety precautions

Precautions

Thank you for purchasing this series of digital projectors.Please read through this User's Guide for proper use of this product.After reading, please keep this manual together with the warranty card in a safe place so that you can refer to it when needed. If you need to know something in use or have problems, please read this User's Guide.

Attention

To prevent electric shock, do not open the projector. There are not any parts repaired by the customer. Please contact manufacturer for the maintenance.

This symbol warns the user that there is a voltage in the unit that has not been insulated. It may cause electric shock from the surface magnetic field. Therefore, it is very dangerous to touch any part inside the unit.

This symbol reminds the user to be very careful in handling and maintenance, so it must be read carefully to prevent any malfunction.

Warning

To prevent fire or electric shock, do not expose the unit to rain or moisture. Do not open the case.

Warning:

Because it is a high-intensity light source, do not stare or look directly at the beam.

≤2000m

Suitable for altitudes less than 2000 meters and non-thermal climate

The names and functions of Projector parts

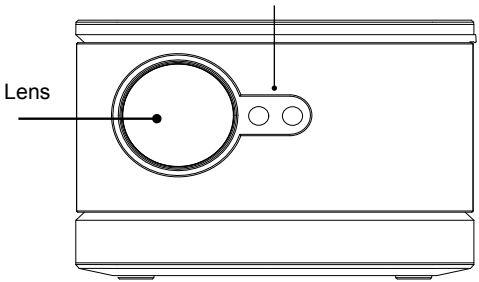

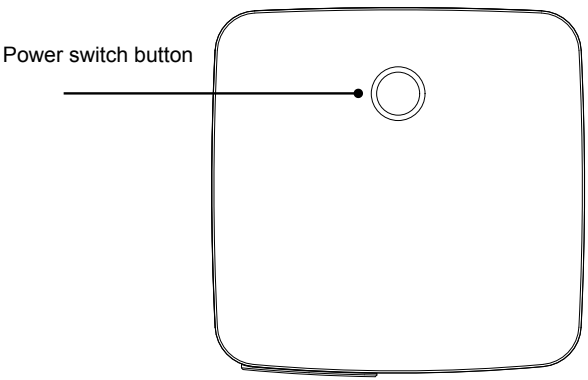

The names and functions of Projector parts

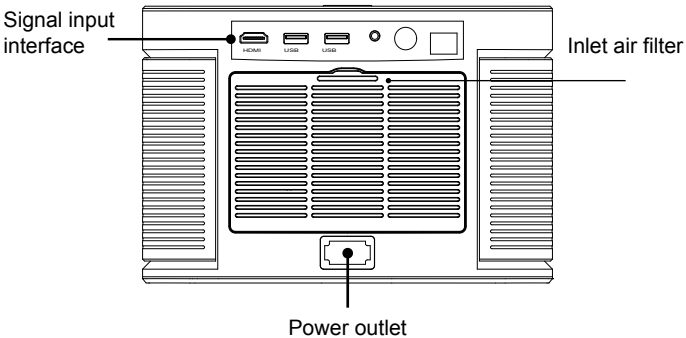

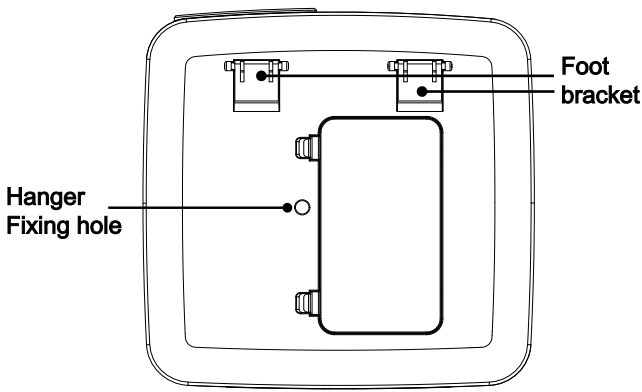

Projector maintenance and cleaning filter screen

Before cleaning the filter screen, make sure to turn off the projector and unplug it from the power supply

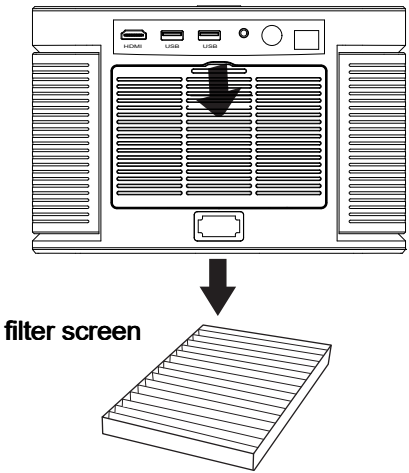

1. Find the filter screen cover at the rear of the projector, and remove the filter screen cover as shown in the figure.
2. Remove the filter screen from the projector and carefully clean the dust with a vacuum cleaner or brush.
3. Put the filter screen into the projector and install the filter cover.

Attention

Regular maintenance of the filter screen is very important for the maintenance of the projector. It is recommended to clean it at least once every two months. If you use the projector in a dusty environment, please increase the cleaning frequency.

Check before use

Equipment connection and equipment

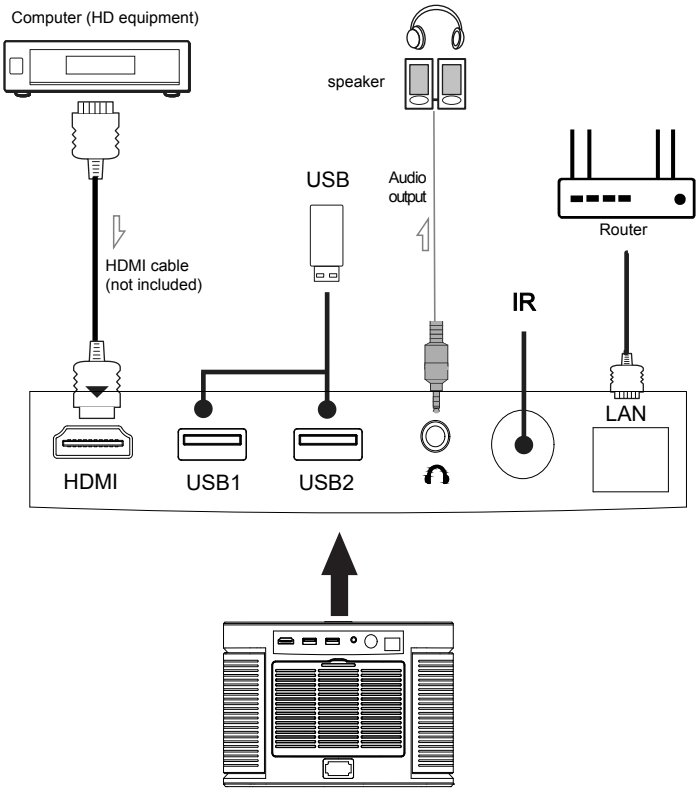

Remote control

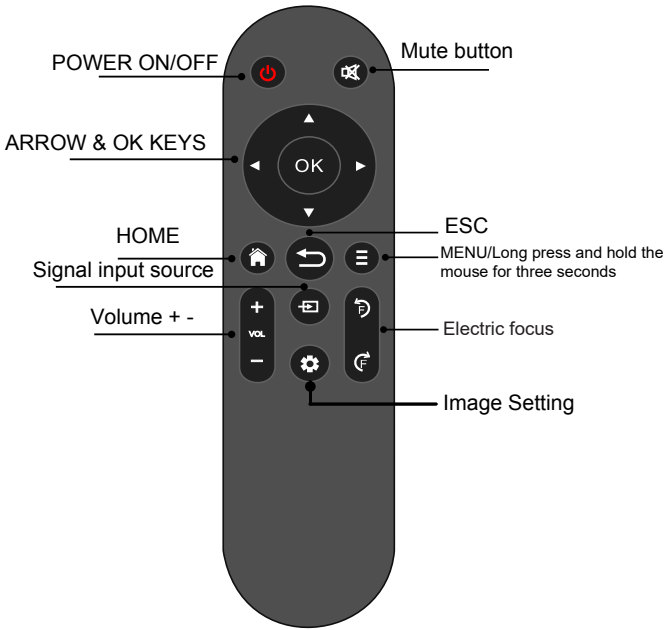

Remote control

! Attention

Do not drop or trample the remote control, or spill any kind of liquid into the remote control.

Do not place the remote control near a heat source, in direct sunlight or in a damp room

Installation and commissioning

Image focal length adjustment

1. When it is used for the first time, the image will generally be blurred, and the image needs to be focused.
2. When the picture is blurred, press the focus button on the remote control to adjust the lens focus, and tap or hold the focus button until the picture is clear.

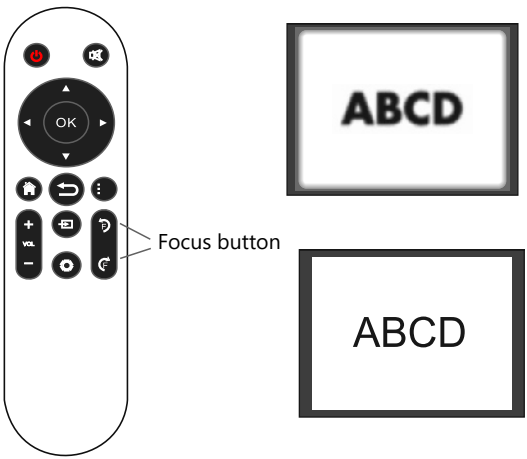

Using a projector

Network Setting

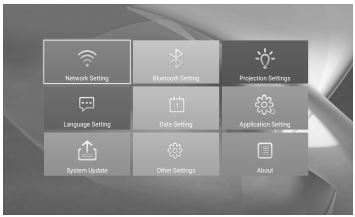

In the main interface, move to the settings interface, select “Settings”, enter the interface, select “Network Settings”, open it, find the wifi you need to connect to, enter the password through the virtual keyboard, and confirm the connection.

Bluetooth Setting

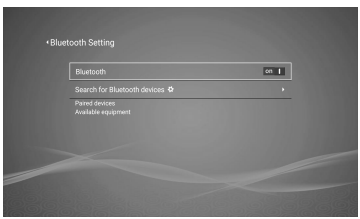

In the main interface, move to the settings interface, select “Settings“, enter the interface, select “Bluetooth Settings“, enter the search for Bluetooth devices, find the Bluetooth settings you need to pair, and confirm pairing.

Projection distance and size

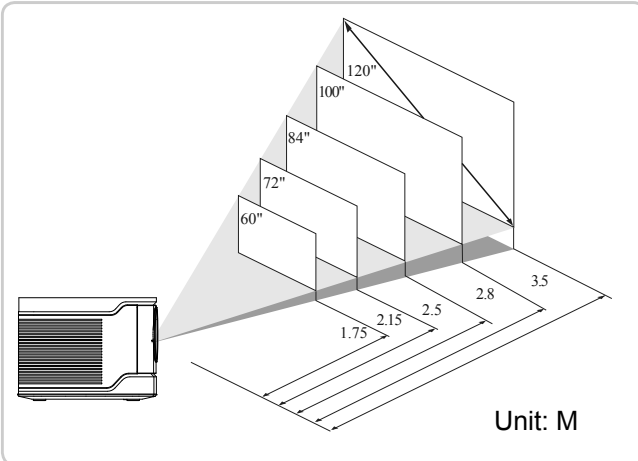

Screen size (INCH)	Screeb size (Width&height)	Projection distance (meter)
60"	1.32×0.78	1.75
72"	1.56×0.93	2.15
84"	1.83×1.1	2.5
100"	2.2×1.32	2.8
120"	2.62×1.55	3.5

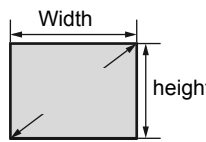

Design allow the error+/_8%

This form based the measure point on the most front end and middle end of the lens. Hypothesis the projector is on the horizontal placement.(Fully extracted the adjuster of front end and back end)

Maintaince
Cleaning method

Before start cleaning, make sure that the power plug is unplugged from the power outlet. Do not use pesticides or other volatile chemicals on the projector or lens. Also, do not allow rubber or vinyl products to contact the projector for a long time, as this may damage or peel off the coating.

Clean the projector

Wipe with a soft, dry cotton cloth. When the dirt is very serious, wipe it with a soft cloth diluted with neutral detergent, and then dry it with a dry cloth. If use chemical fiber cloth, please observe the precautions.

Do not use water, benzene, or other solvents to reduce the quality of the rabbit or peel off the coating.

When removing the dirt in the ventilation hole, insert a brush to clean the front of the vacuum cleaner. Avoid using a vacuum cleaner without any joints directly, or use a spray nozzle for cleaning.
Do not scratch the main body of the projector with nails or other hard objects to avoid scratches.

Dirty lens

Use the same method for cleaning the lens of the projector: use a professional blower for the camera or cleaning paper for the eyeglass lens. Be careful not to scratch the lens.

Sweeping of suction and exhaust dust

The dust in the air inlet and outlet prevents the ventilation and will increase the internal temperature. Cause a malfunction. Cleaning guidelines: At least every 10,000 hours of use, that is, cleaning once. Turn off the power, and then disconnect the power cord

Clean the outside with an electric vacuum cleaner. Install the brush head adapter on the vacuum cleaner. Please be careful not to use the vacuum cleaner without adapter or the adapter without brush head

Caution: There are no self-serviceable parts inside the device. Avoid electric shock. Do not open it without permission. For repairs, please contact authorized service personnel

S&E
FC
CE
10

This device complies with part 15 of the FCC Rules. Operation is subject to the following two conditions: (1) This device may not cause harmful interference, and (2) this device must accept any interference received, including interference that may cause undesired operation.

Any Changes or modifications not expressly approved by the party responsible for compliance could void the user's authority to operate the equipment.

Note: This equipment has been tested and found to comply with the limits for a Class B digital device, pursuant to part 15 of the FCC Rules. These limits are designed to provide reasonable protection against harmful interference in a residential installation. This equipment generates uses and can radiate radio frequency energy and, if not installed and used in accordance with the instructions, may cause harmful interference to radio communications. However, there is no guarantee that interference will not occur in a particular installation. If this equipment does cause harmful interference to radio or television reception, which can be determined by turning the equipment off and on, the user is encouraged to try to correct the interference by one or more of the following measures:

-Reorient or relocate the receiving antenna.

-Increase the separation between the equipment and receiver.

-Connect the equipment into an outlet on a circuit different from that to which the receiver is connected.

-Consult the dealer or an experienced radio/TV technician for help.

-This equipment complies with FCC radiation exposure limits set forth for an uncontrolled environment. This equipment should be installed and operated with minimum distance 20cm between the radiator & your body.