FLUX

Quick Start Guide

Edition
Sep 2023

ador

Full Instructions

You can find the **full and lastest instructions**, available in English and many other languages, on our **Help Center** website: **support.flux3dp.com/hc**

Original Instructions CE

Bring Your Designs to Life

ador

Quick Start Guide

FLUX Inc.

1F., No.79-3, Ln.209, Sec.2, Xinnong St.,
Yangmei Dist., Taoyuan City 326015, Taiwan

Table of Contents

004 ..... Quick Start Guide (English)
015 ..... Rychlý průvodce (Czech)
026 ..... Hurtigguide (Danish)
037 ..... Snelgids (Dutch)
048 ..... Pikaopas (Finnish)
059 ..... Guide rapide (French)
070 ..... Kurzanleitung (German)
081 ..... Használati útmutató (Hungarian)
092 ..... Guida rapida (Italian)
103 ..... クイックガイド (Japanese)
113 ..... 제품 안내서 (Korean)
123 ..... Hurtigstartveiledning (Norwegian)
134 ..... Krótki przewodnik (Polish)
145 ..... guia rápido (Portuguese)
156 ..... Guia rápida (Spanish)
167 ..... Snabb guide (Swedish)
178 ..... 快速導引指南 (Traditional Chinese)
188 ..... 快速导引指南 (Simplified Chinese)
198 ..... دليل سريع (Arabic)

FLUX Ador Quick Start Guide

Thank you for choosing FLUX products.
This quick start guide will help you set up your FLUX Ador for first use.

Meet FLUX Ador, the world's first color-printing laser cutter. Boasting three high-quality, interchangeable laser module—diode laser, infrared laser, and printing module. Ador enables you to both engrave and cut through a wide range of materials while enhancing your projects with a pop of color. Designed with a user-friendly interface, Ador is the ideal laser creation tool for professionals and an excellent starting point for beginners venturing into their artistic exploration. With unlimited possibilities at your fingertips, begin your journey into laser crafting with Ador now.

✳ The infrared laser and printing modules are optional add-ons.
✳ Please retain all packages for warranty purposes.

The latest version of the Quick Start Guide is available at the following internet address. **https://support.flux3dp.com/ador**

What's in the box?

Accessories

- Laser module
- Vent hose
- Clamp
- Power adapter
- Power cord
- USB cable
- Prism Lift x6

Tool

- Hex wrench

Consumables

- Lubricating oil
- Wood piece

Product & Warning labels

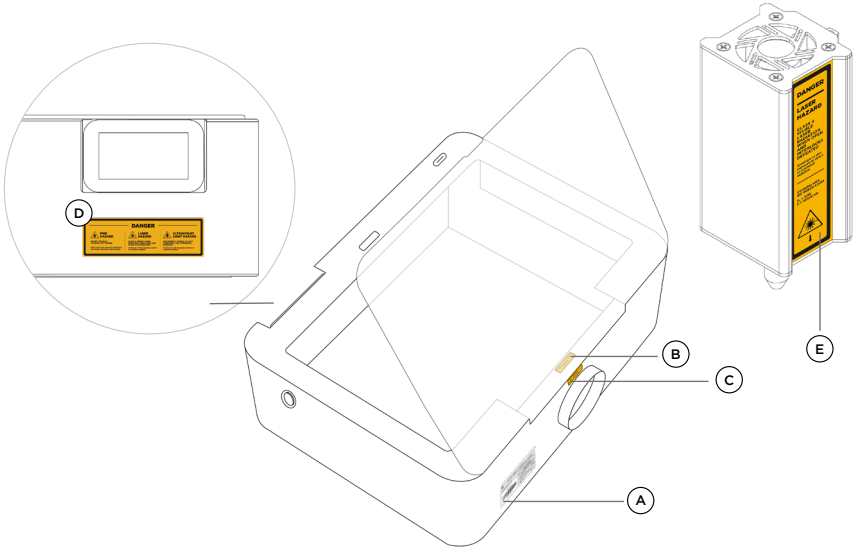

A

FLUX Ador

Manufactured Date: Sep 2023

Serial Number

ADO1XXXXXXX

Input: 24V 7A

Model Number: ADO1 Rated: 168W

Product Name: Laser Cutter Color Printer

CLASS 1 LASER PRODUCT
CONSUMER LASER PRODUCT
CLASSIFIED IEC 60825-1:2014 & EN 50689:2021
Complies with 21 CFR Chapter 1, Subchapter J."

Designed by FLUX Inc.

1F., No. 79-3, Ln. 209, Sec. 2, Xinnong St.,
Yangmei Dist., Taoyuan City 326015, Taiwan

Made in China

flux3dp.com

B

LASER HAZARD

CLASS 4 VISIBLE LASER RADIATION WHEN OPEN AND INTERLOCKS DEFEATED

Avoid eye or skin exposure to direct or scattered radiation

C

CAUTION

Install the vent hose before using the machine.

D

DANGER

FIRE HAZARD

DO NOT OPERATE MACHINE UNATTENDED

Refer to the user manual for additional information regarding material safety

LASER HAZARD

CLASS 4 VISIBLE LASER RADIATION WHEN OPEN AND INTERLOCKS DEFEATED

Avoid eye or skin exposure to direct or scattered radiation

ULTRAVIOLET LIGHT HAZARD

RISK GROUP 3 VISIBLE UV LIGHT WHEN OPEN AND INTERLOCKS DEFEATED

Avoid eye or skin exposure to direct or scattered radiation

E

DANGER

LASER HAZARD

CLASS 4 VISIBLE LASER RADIATION WHEN OPEN AND INTERLOCKS DEFEATED

Avoid eye or skin exposure to direct or scattered radiation

Complies with IEC 60825-1:2014

P_0 = 10W / 20W
λ = 455±5 nm

Safety Precautions

Safety Precautions

- ⚠ Do not let minors operate alone.
- ⚠ Confirm that the person who intends to operate the machine has read the safety precautions carefully and followed the instructions in the manual.
- ⚠ Make sure to install the vent hose properly. An exhaust hose missing or not installed properly will increase the risk of laser, fumes, and dust hazards.
- ⚠ Do not modify the machine without FLUX authorization.
- ⚠ Do not try to modify, defeat or disassemble safety interlocks.
- ⚠ Do not place the machine in a humid, splashing rain or direct sunlight space. In case of rain or extreme weather, please stop using the machine and put the vent hose inside.
- ⚠ Do not place liquid, flammable, or explosive objects near the machine.
- ⚠ Do not place any living beings in the machine. It is strictly prohibited.
- ⚠ There are no noise hazard concerns as the Ador's working level is below 70 dB.

Machine Handling

The Ador weighs 19 kilograms. It is recommended to have two people lift it cooperatively to avoid injury.

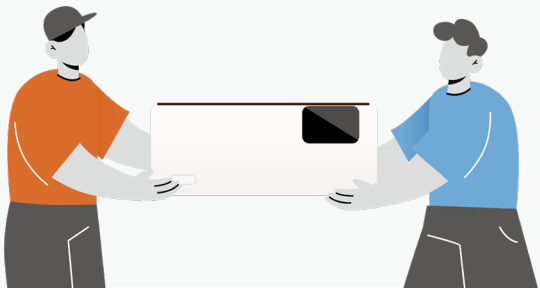

Fire Hazard

- ⚠ Do not leave the machine unattended while in use.
- ⚠ Regularly clean the debris inside the Ador.
- ⚠ In case of fire, turn off the power immediately and unplug the power cord.
- ⚠ Always have an accessible, functioning fire extinguisher in the workplace.
- ⚠ Confirm that the engraving material will not be dangerously burned at high temperatures.

Laser Safety

FLUX Ador is a Class 1 Laser Product and a Consumer Laser Product, complying with the IEC 60825-1:2014 and EN 50689:2021 certifications. The IEC 60825-1:2014 standard categorizes laser systems into eight safety classes: 1, 1C, 1M, 2, 2M, 3R, 3B, and 4. FLUX Ador is the Class 1 Laser Product, the safest among all classes, and aligns with the laser safety standards set by the International Electrotechnical Commission (IEC). EN 50689:2021 is a laser safety standard designed explicitly for consumer laser products. It guarantees that lasers with this certification meet the highest safety standards for consumer use. These assurances are provided through the laser's enclosed protective housing and interlocks safety devices.

* For further information, please refer to the safety precautions on the Ador Help Center.

Work Position of Operator

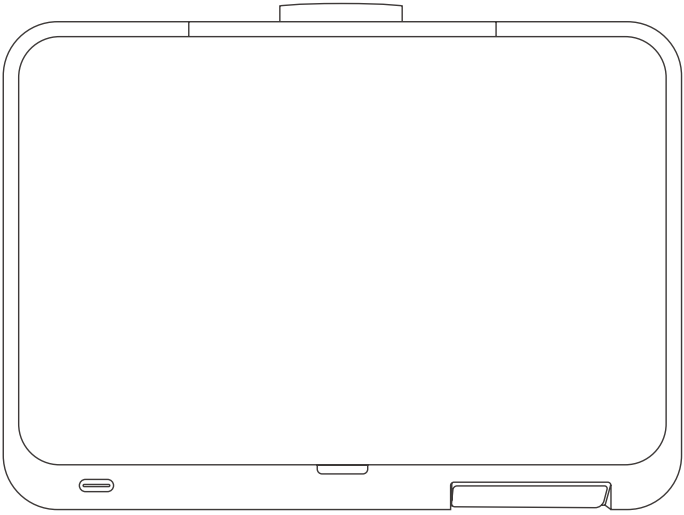

Operator