SHOWTOP

Advertising machine
Commercial intelligent terminal

User Manual

Important information

Safety Alerts

To ensure the safe and proper use of this product and to prevent injury to the user or damage to property, please observe the following safety measures during installation, use, maintenance and repair.
Before operating this product, please read through this manual and retain it for future reference.

- Observe and follow all warnings and instructions.
- Do not make any adjustments, repairs or alterations if you are not qualified to do so.
- Do not open or remove the back cover, case or flap of this product. Contact your dealer or after-sales service centre if internal inspection, adjustment or repair is required.
- Do not place objects on the product. Otherwise, this product may be damaged if a foreign object enters the interior of the unit.
- Prevent stepping on or squeezing the power cord, especially at plugs, power outlets, and locations where cables protrude from the product.
- Do not place the product in a flammable or corrosive gas environment, which may result in causing a fire or product damage. Placing the product in a flammable gas environment is more likely to cause a dangerous explosion.
- If smoke, unusual odour or noise occurs for any reason, disconnect the power supply and connecting cables from the unit immediately. After confirming that the smoke or odour no longer occurs, contact the after-sales service centre for repair. Continued use without repair may result in a fire.
- Repairs should only be carried out by qualified service personnel. When the product is damaged in any way, such as when the plug is damaged, when liquid is spilled or a foreign object is dropped into the unit, when the unit is exposed to rain or moisture, when it does not work properly, or when it is dropped from a high place, have it repaired immediately.
- Do not expose the product to rain or chemicals. If the product is wet, blow dry it completely before switching on the power. Switch off the power when cleaning this product.
- Improper installation of the unit may cause the unit to fall and cause other accidents. Make sure to lock the screws of each component during installation.
- Do not touch the fixed parts inside the equipment. Failure to do so may result in personal injury or equipment damage.

Use extreme caution when servicing internal parts, even after you have disconnected the power. Some units equipped with an uninterruptible power supply (UPS) may continue to supply the unit with enough power to be dangerous to humans even after you disconnect the power.

- Do not put the button cell into fire or high temperature oven, or mechanically break and cut the button cell, which may cause an explosion.
- Keep the product and plug away from fire or heat sources.

Caveat

- Please place the device in a horizontal, stable and well-ventilated place, and avoid direct sunlight, high temperature, humidity, dusty and corrosive gas environment.
- If wall-mounted, please ensure that the wall should have sufficient load-bearing strength, and install it reliably according to the wall-mounting instructions to avoid falling damage and injury.
- When the temperature varies greatly from hot to cold, the LCD screen may become foggy, which will cause image distortion or colour degradation, just wait for a few moments (still powered on), the fogging phenomenon will disappear by itself.
- Please do not block the vents. Follow the instructions in this manual when installing the unit.
- Do not install the unit near any heat sources such as radiators, heat registers, stoves or other appliances that generate heat. Do not use connection cables of substandard quality. Use of substandard connection cables may cause the unit to malfunction.
- Do not press, pull or heat the connecting cable with a heavy object as this may damage the cable.
- Grasp the plug of the cable when plugging or unplugging the cable, pulling the cable hard may cause damage or injury to the cable.
- If for any reason the unit or the cable is damaged, immediately disconnect the power supply and the cable and then contact an after-sales service centre. Continued use without repair may result in smoke or odour conditions.
- Do not hang or climb on the unit. This may cause the equipment to fall, tip over or be damaged and may result in injury to personnel.

Injury. Be more careful when children are around the appliance.

- Disconnect the power cord for safety when the unit will not be used for an extended period of time.
- Do not allow the cord to be pinched against a wall or bend, pull, or wrap the cord excessively.

When moving the unit, be sure to disconnect the power and connection cables.

- Do not subject the unit to impact. Excessive impact may cause the unit to malfunction.

I.Product Name

Product model: AI32W
Product name: 32-inch advertising machine | commercial intelligent terminal

II.Structural Diagram of the Product

二、产品图片

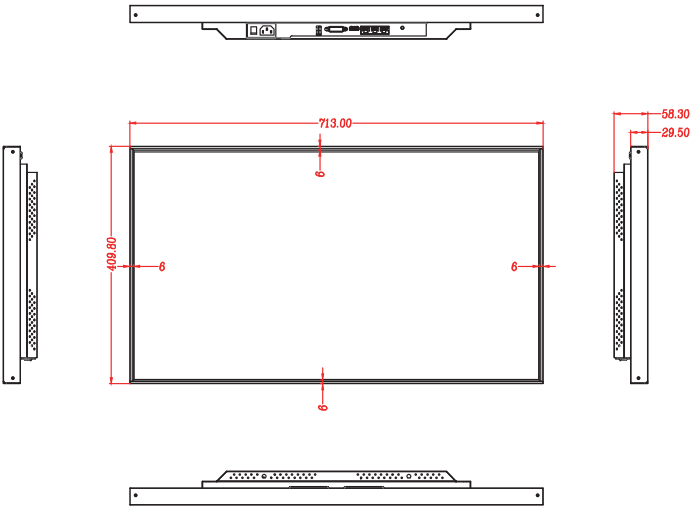

III.Basic Specifications and Parameters

Display Parameters	
Panel size	32 inches
Display area size	940.8(H)*529.2(V)mm
Aspect ratio	16:9
Resolution	1920*1080
Display color	16.7M
Brightness	400cd/m2(center point, typical value)
Contrast	1000:1
Visible angle	89/89/89/89(Min.)(CR≥ 10)
Response time	8ms(Gray To Gray)
Field frequency	60Hz
Theoretical service life	30000H
Power consumption	<100W

Specification Parameters	
Chip	Hathi-V352
Memory	DDR3 1GB (Built-in)
Built-in storage capacity	EMMC 8GB (Standard configuration)
Language	Chinese, English
Ethernet	100M adaptive Ethernet
Wi-Fi	Supports 2.4G 802.11 b/g/n 1T1R WLAN
Input interface	RJ45 * 1, HDMI IN * 1, USB HOST * 2
Output interface	Earphone out* 1

AV Parameters	
Speaker	8 Ω 5W*2
Audio mode	Left & Right channel
Audio format	MP3/WMA
Video format	Support AVI, MKV, MP4, FLV, WAV, TS, etc
Image format	Support BMP, JPEG, PNG, GIF, etc

Product Accessories	
Wall-mounted component	1PC (Including splicing hook*4, M4 screw*16)
Remote control	1PC
Power cord	1PC
Antenna rod	1PC
Quality Certificate	1PC
Warranty Card	1PC
User Manual	1PC

IV.Operating Environment

Operating Environment	
Operating temperature	0℃~40℃
Storage temperature	-10℃~60℃
Ambient humidity	<85%
Operating voltage	100-240V~, 50/60Hz

V.Structure and Assembly Instructions

1. The device supports wall-mounted horizontal and vertical display.

2. The threaded holes on the back of the device are 200*200MM away from the wall mounting holes.(Wall mounting screws please use PM8 * 15)

3. The device is equipped with 2 USB ports (software upgrade).

VI.Packaging

See Annex for details.

Please note the following:

1. Intellectual Property Statement: The hardware design and software programming of this product are protected by copyright. Unauthorized copying of this product and the contents of the Instruction Manual will be investigated with corresponding legal liability.
2. This is a Grade A product. In a standard living environment, this product may cause certain radio interference. In this case, the user may be required to take practical measures against such interference.
3. The content in this Instruction Manual is for reference only and does not constitute any form of commitment.
4. SHOWTOP reserves the right to improve and change the product design without prior notice.

Warning

In a standard living environment, this product may cause certain radio interference.
In this case, the user may be required to take practical measures against such Interference.

VII.Test Report

Test Report

Product Model	AI32W	Purpose	To ensure the reliability and practicality of the product
Prepared by	Shenzhen SHOWTOP Technology Co., Ltd		
Scope of Application	SHOWTOP Commercial Advertising Machine		

S/N	Test Item	Quantity	Test Requirement/Standards	Test Steps	Test Results
1	Drop impact test	1	Product weight: 9Kg≤M≤20Kg Drop height: 30CM for corners/edges, 40CM for top, 40CM for other sides Drop order: 1 corner, 3 edges, 6 sides	1. Prepare qualified and verified test equipment and drop test bench; 2. Perform operations on the packaged device according to the experimental requirements; 3. After the experiment, unpack the device and check whether there is any abnormality in appearance, and check whether it is operating normally after powering on. If there is no abnormality, the test is passed and ended.	PASS
2	High and low temperature test	1	Test environment: 1. 45 ±2℃ 50%RH 4h 2. 60±2℃ 30%RH 4h 3. -25±2℃ ORH 4h 4. - 10±2℃ ORH 4h Test each of the above parameters for more than 4 hours after powering on, check whether the device is operating normally. Test each parameter for more than 4 hours after powering off then powering on, and check whether the device is operating normally	1. Prepare qualified and verified thermostatic chamber and set the parameters according to the experimental requirements/standards; 2. Place the device into the experimental equipment for testing according to the experimental requirements/standards; 3. After the experiment, check whether there is any abnormality in the equipment. If there is no abnormality, the test is passed and ended.	PASS
3	Electrical Performance test	1	Test condition 1) The product is not damaged after aging for 30 minutes at ±20% of the rated operating voltage; 2) Adjust the voltage by ±15% of the rated operating voltage by 20V each time (increasing or decreasing the voltage), and check whether there are any abnormalities in the image and sound	1. Prepare qualified and verified voltage regulator, and set parameters according to the experimental requirements/standards; 2. A professional test technician conducts the test according to the test requirements; 3. After the test, check whether there is any abnormality in the equipment. If there is no abnormality, the test is passed and ended.	PASS
4	Display test	1	1. Signal source: The device works for screen projection and playback when connected to the network and WIFI; 2.Software version: Latest version; 3. Voltage: Rated Operating voltage; 4. Load: Two speakers working simultaneously, with other parameters set to factory settings; 5.Test environment: Tested at a temperature of 40±2°C and humidity of 28%RH for more than 12 hours	1. A professional test technician tests the machine for more than 12 hours according to the experimental requirements/standards; Check whether the WIFI and network connections are operating normally; 2. Check whether the remote control is operating normally ; 3. Check whether the software version is the latest version; 4. After the experiment, check whether there is any abnormality in the equipment. If there is no abnormality, the test is passed and ended.	PASS

VII. Test Report

S/N	Test Item	Quantity	Test Requirement/Standards	Test Steps	Test Results
5	Structural component inspection	1	Metal parts should be free from rust and other mechanical damage. The color of the surface coating should not have any obvious color discrepancy. The operating switches and buttons should work flexibly and reliably, and parts should be fastened and not loose. There should be no obvious installation gaps. The complete device should have sufficient mechanical stability	1.A professional test technican inspects the hardware and structural parts the device according to the inspection requirements/standards; 2.During the inspection, the device should not have any problems other than the standards; inspection ended	PASS
6	Packaging inspection	1	The surface of the packaging should be clean and tidy without obvious defects, such as concave and convex distortions, scratches, cracks, deformations and burrs. The surface coating should not blister, crack, or fall off. The text, graphics and symbols on the outer box, and in the Instruction Manual, etc. should be clear and feature correct indications	1. Before packaging the device, a professional test technician should inspect the surface, outer box, Instruction Manual, etc. of the device according to the inspection requirements/standards; 2. During the inspection, the device should not have any problems other than the standards; inspection ended.	PASS

Note: The above test requirements/standards are the internal test standards of the commercial display advertising machine industry

VII. FCC WARNING

This device complies with part 15 of the FCC Rules. Operation is subject to the following two conditions: (1) this device may not cause harmful interference, and (2) this device must accept any interference received, including interference that may cause undesired operation. Any changes or modifications not expressly approved by the party responsible for compliance could void the user's authority to operate the equipment.

NOTE: This equipment has been tested and found to comply with the limits for a Class B digital device, pursuant to Part 15 of the FCC Rules. These limits are designed to provide reasonable protection against harmful interference in a residential installation. This equipment generates, uses and can radiate radio frequency energy and, if not installed and used in accordance with the instructions, may cause harmful interference to radio communications.

However, there is no guarantee that interference will not occur in a particular installation. If this equipment does cause harmful interference to radio or television reception,

which can be determined by turning the equipment off and on, the user is encouraged to try to correct the interference by one or more of the following measures:

-- Reorient or relocate the receiving antenna.

-- Increase the separation between the equipment and receiver.

-- Connect the equipment into an outlet on a circuit different from that to which the receiver is connected.

-- Consult the dealer or an experienced radio/TV technician for help.

To maintain compliance with FCC ' s RF Exposure guidelines, This equipment should be installed and operated with minimum 20cm distance between the radiator and your body: Use only the supplied antenna.