5.0 x 1.2 x 1.3 (mm) WiFi/Bluetooth Ceramic Chip Antenna (YF500B) Engineering Specification

1. Product Number

YF	5012	H2	R	2G4502
1	2	3	4	5

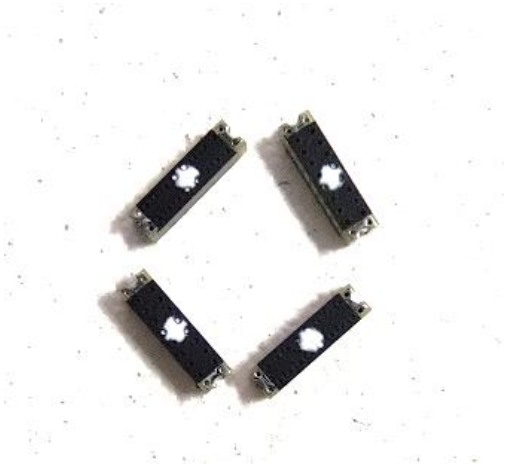

(1)Product Type	Chip Antenna
(2) Size Code	5.0x1.2mm
(3) Type Code	H2
(4) Packing	Tape and reel
(5) Frequency	2.45GHz

2. Features

*Stable and reliable in performances
*Low temperature coefficient of frequency

SHEN ZHEN YINGFENG ANTENNA TECHNOLOGY CO.,LTD
Address: 412, Building 7, Phase II, Nanshan Yungu Entrepreneurship Park, No. 2 Pingshan 1st Road, Pingshan Community, Taoyuan Street, Nanshan District, Shenzhen

*Low profile, compact size
*RoHS compliance
*SMT processes compatible

3. Applications

*Bluetooth earphone systems
*Hand-held devices when WiFi /Bluetooth functions are needed, e.g., Smart phone.
*IEEE802.11 b/g/n
*ZigBee
*Wireless PCMCIA cards or USB dongle

4. Description

Ying feng chip antenna series are specially designed for WiFi/Bluetooth applications. Based on yingfeng proprietary design and processes, this chip antenna has excellent stability and sensitivity to consistently provide high signal reception efficiency.

5. Electrical Specifications (40 x 40 mm^2 ground plane)

5-1. Electrical Table

Characteristics		Specifications	Unit
Outline Dimensions		5.0x1.2x1.3	mm
Working Frequency		2400~2500	MHz
VSWR		2 Max.	
Impedance		50	Ω
Polarization		Linear Polarization	
Gain	Peak	2.5 (typical)	dBi
	Efficiency	75 (typical)	%

5-2. Return Loss & VSWR

Return Loss (S_{11})

Smith Chart(S_{11})

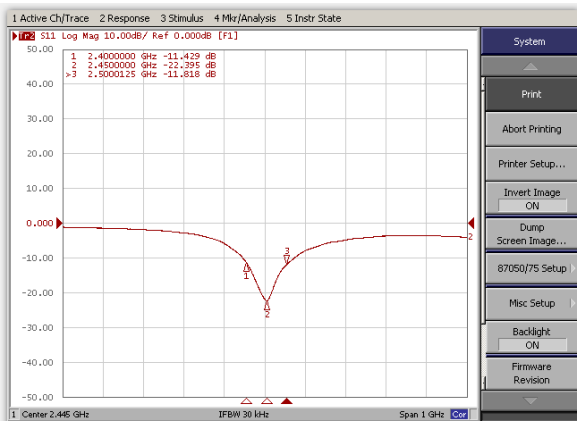

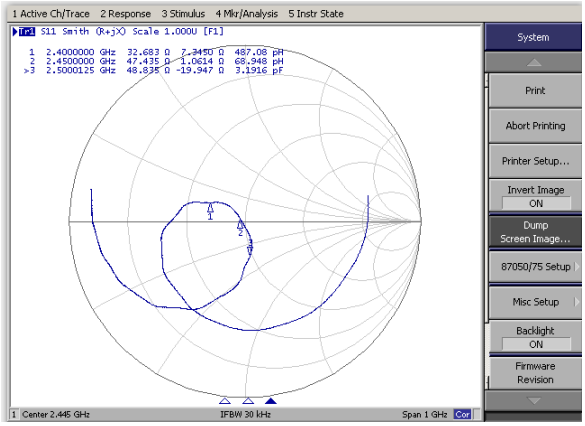

6 Outline Dimensions of Antenna & Evaluation Board (unit: mm)

6-1. Antenna Dimensions

Configuration and Dimensions:

Dimension and Terminal Configuration

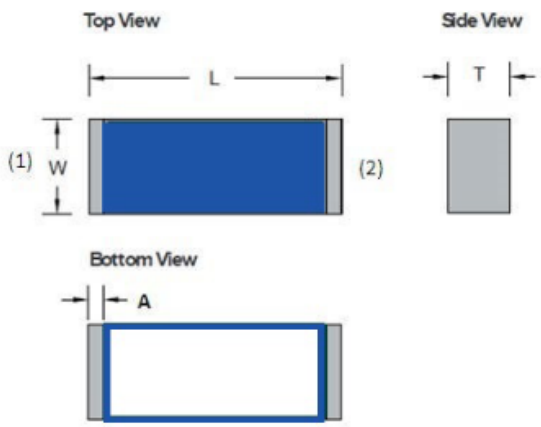

Dimension (mm)	
L	5.0 +-0.20
W	1.20+-0.20
T	1.30+-0.20
A	0.20+-0.20

No.	Terminal Name
1	Feeding
2	Soldering

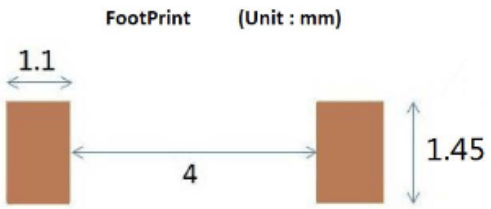

6-2-2. **Matching Circuit:**

With the following recommended values of matching and tuning components, the center frequencies will be about 2450 MHz at our standard 40x40 mm^2 evaluation board. However, these are reference values, may need to be changed when the circuit boards or part vendors are different.

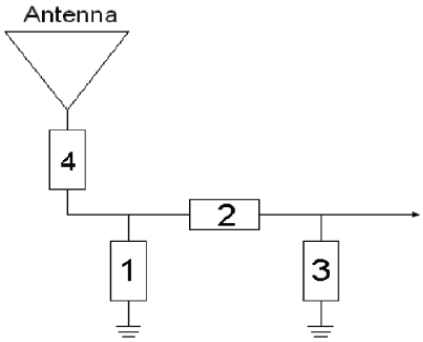

System Matching Circuit Component		
Location	Description	Vendor
1	N/A*	-
2	3.3nH, (0402)	DARFON
3	1.5pF, (0402)	MURATA
4	0Ω, (0402)	-

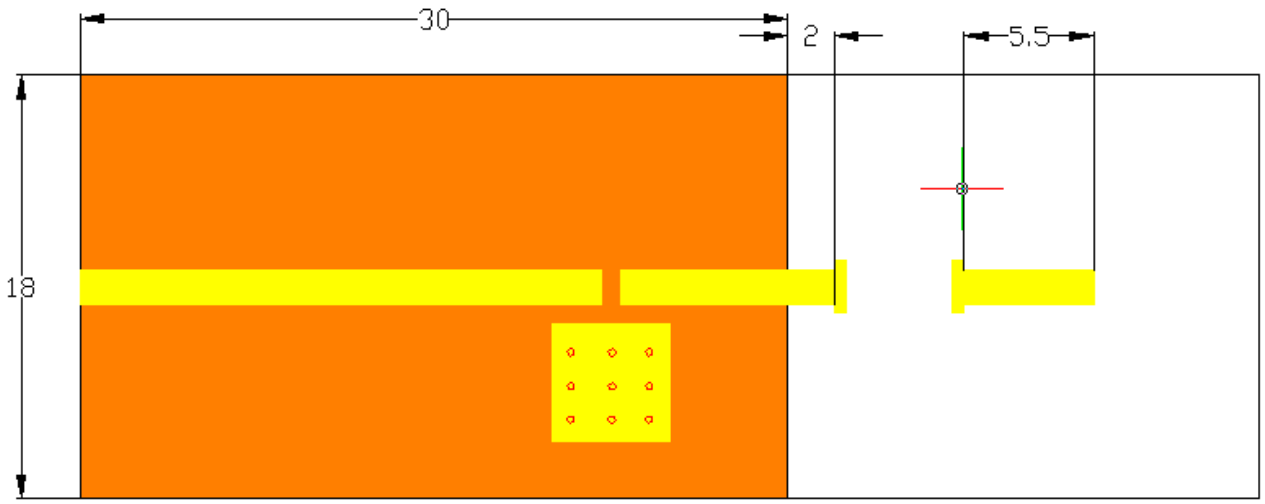

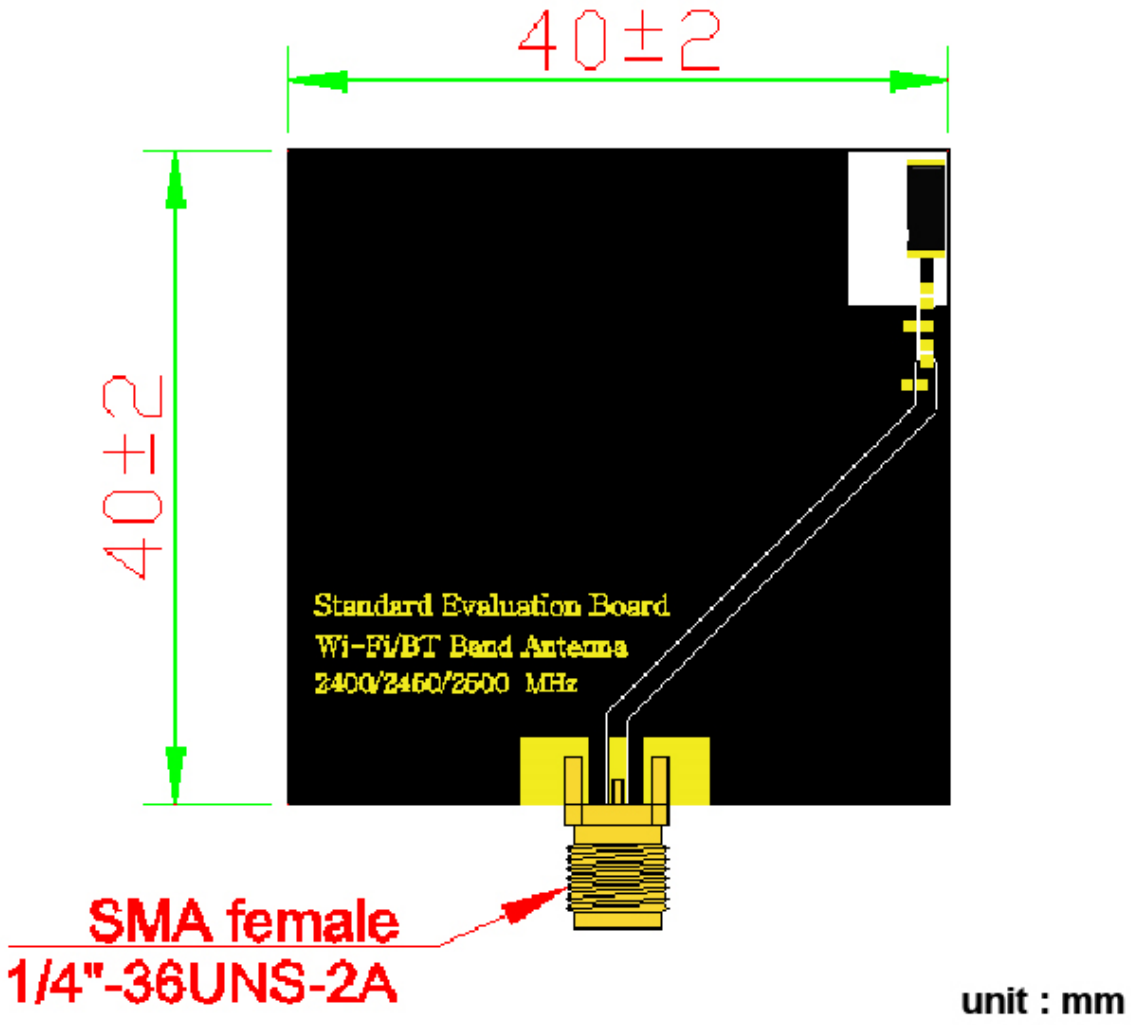

7.Radiation Pattern (40x 40 mm^2 ground plane)

7-1. 3D Gain Pattern @ 2450 MHz

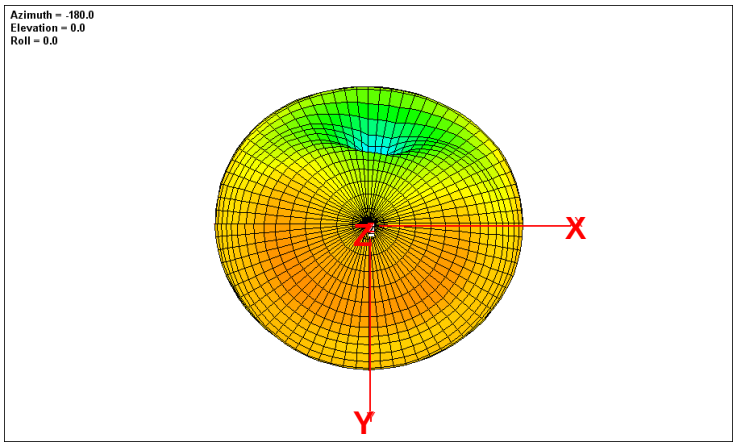
Azimuth = -180.0
Elevation = 0.0
Roll = 0.0
Z
X
Y

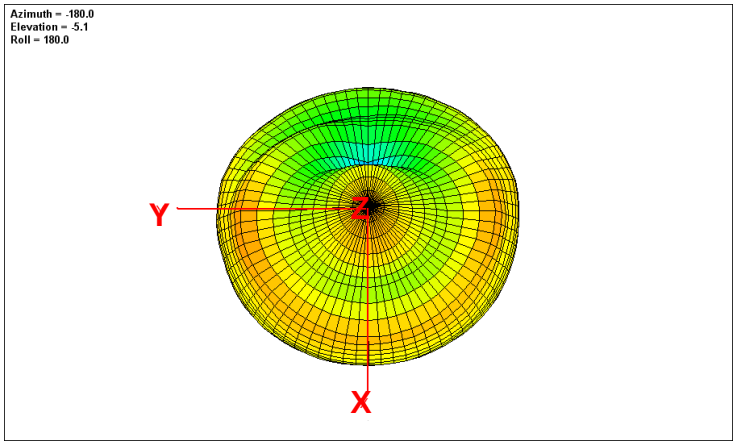
Azimuth = -180.0
Elevation = -5.1
Roll = 180.0
Y
Z
X

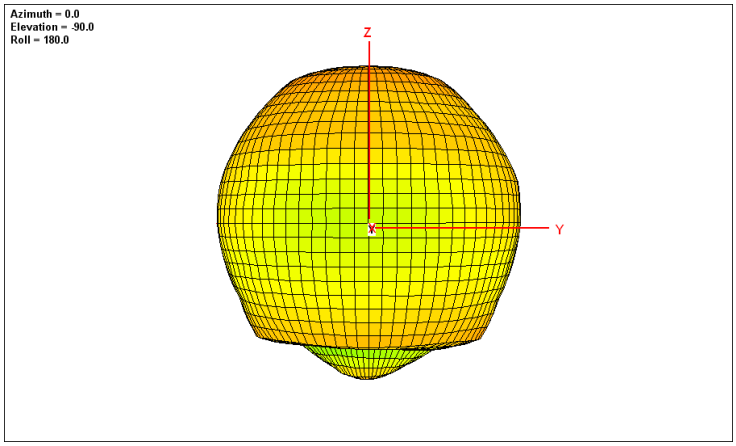
Azimuth = 0.0
Elevation = -90.0
Roll = 180.0
Z
Y

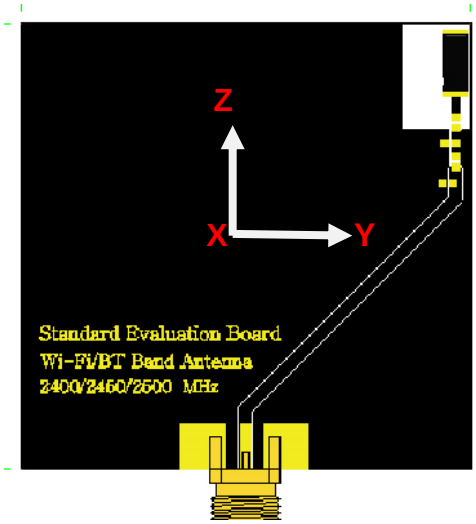
Z
X
Y
Standard Evaluation Board
Wi-Fi/BT Band Antenna
2400/2450/2500 MHz

7-2. 3D Efficiency Table

Frequency(MHz)	2400	2410	2420	2430	2442	2450	2460	2470	2480	2490	2500
Efficiency (dB)	-1.4	-1.0	-0.9	-0.7	-0.7	-0.8	-0.9	-1.1	-1.2	-1.3	-1.4
Efficiency (%)	70.8	71.7	72.3	74.4	74.5	75.0	74.0	73.6	72.1	71.6	70.5
Gain (dBi)	1.9	2.1	2.3	2.4	2.5	2.5	2.4	2.3	2.2	2.1	1.8

Taping Specifications

Reel

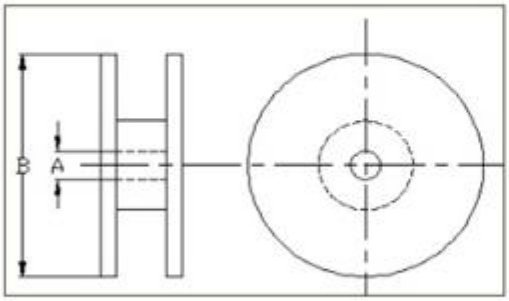

Checking note	Index	Spec (mm)
Internal diameter of reel	A	60.20 ± 0.50
External diameter of reel	B	178 ± 1.00

Quantity/per reel	3000pcs
Tape material	Plastic (embossed)

Taping Blister Tape

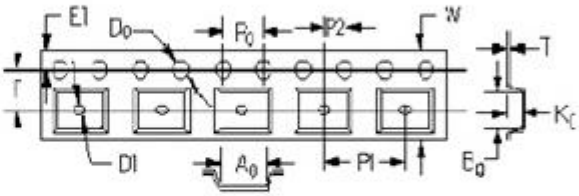

Checking note	Index	Spec (mm)
Sprocket hole	D0	1.50 +0.10/-0.00
Distance sprocket hole to outside	E1	1.75 ± 0.10
Distance sprocket hole to pocket	F	5.50 ± 0.05
Distance sprocket hole to sprocket hole	P0	4.00 ± 0.10
Distance pocket to pocket	P1	4.00 ± 0.10
Distance sprocket hole to pocket	P2	2.00 ± 0.05
Tape width	W	12.00 +0.30/-0.10
Pocket width nominal clearance	A0	2.28 ± 0.13
Pocket length nominal clearance	B0	5.70 ± 0.13
Pocket depth minimum clearance	K0	1.58 ± 0.10
Thickness of tape	T	0.23 ± 0.02

Reliability Table

Test Item	Procedure	Requirements Ceramic Type	Remark (Reference)
Electrical Characterization		Fulfill the electrical specification	User Spec.
Thermal Shock	1. Preconditioning: 50 ± 10℃ / 1 hr , then keep for 24 ± 1 hrs at room temp. 2. Initial measure: Spec: refer Initial spec. 3. Rapid change of temperature test: -30℃ to +85℃; 100 cycles; 15 minutes at Lower category temperature; 15 minutes at Upper category temperature.	No Visible Damage. Fulfill the electrical specification.	MIL-STD-202 107
Temperature Cycling	1. Initial measure: Spec: refer Initial spec. 2. 100 Cycles (-30℃ to +85℃), Soak Mode=1 (2 Cycle/hours). 3. Measurement at 24 ± 2Hours after test condition.	No Visible Damage. Fulfill the electrical specification.	JESD22 JA104
High Temperature Exposure	1. Initial measure: Spec: refer Initial spec. 2. Unpowered; 500hours @ T=+85℃. 3. Measurement at 24 ± 2 hours after test.	No Visible Damage. Fulfill the electrical specification.	MIL-STD-202 108
Low Temperature Storage	1. Initial measure: Spec: refer Initial spec. 2. Unpowered: 500hours @ T= -30℃. 3. Measurement at 24 ± 2 hours after test.	No Visible Damage. Fulfill the electrical specification.	MIL-STD-202 108
Solderability (SMD Bottom Side)	Dipping method: a. Temperature: 235 ± 5°C b. Dipping time: 3 ± 0.5s	The solder should cover over 95% of the critical area of bottom side.	IEC 60384-21/22 4.10
Soldering Heat Resistance (RSH)	Preheating temperature: 150 ± 10°C. Preheating time: 1~2 min. Solder temperature: 260 ± 5°C. Dipping time: 5 ± 0.5s	No Visible Damage.	IEC 60384-21/22 4.10
Vibration	5g's for 20 min., 12 cycles each of 3 orientations Note: Use 8"X5" PCB .031" thick 7 secure points on, one long side and 2 secure points at corners of opposite sides. Parts mounted within 2" from any secure point. Test from 10-2000 Hz.	No Visible Damage.	MIL-STD-202 Method 204
Mechanical Shock	Three shocks in each direction shall be applied along the three mutually perpendicular axes of the test specimen (18 shocks) Peak value: 1,500g's Duration: 0.5ms Velocity change: 15.4 ft/s Waveform: Half-sine	No Visible Damage.	MIL-STD-202 Method 213
Humidity Bias	1. Humidity: 85% R.H., Temperature: 85 ± 2 °C. 2. Time: 500 ± 24 hours. 3. Measurement at 24 ± 2hrs after test condition.	No Visible Damage. Fulfill the electrical specification.	MIL-STD-202 Method 106

Board Flex (SMD)	1. Mounting method: IR-Reflow. PCB Size (L:100 × W:40 × T:1.6mm) 2. Apply the load in direction of the arrow until bending reaches 2 mm. 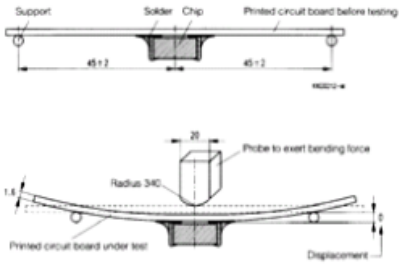 	No Visible Damage.	AEC-Q200 005
Adhesion	Force of 1.8Kg for 60 seconds. 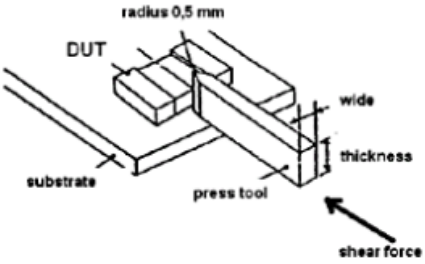 	No Visible Damage Magnification of 20X or greater may be employed for inspection of the mechanical integrity of the device body terminals and body/terminal junction.	AEC-Q200 006
Physical Dimension	Any applicable method using x10 magnification, micrometers, calipers, gauges, contour projectors, or other measuring equipment, capable of determining the actual specimen dimensions.	In accordance with specification.	JESD22 JB100