Silk'n®

Silk'n 7

H3500

EN USER MANUAL

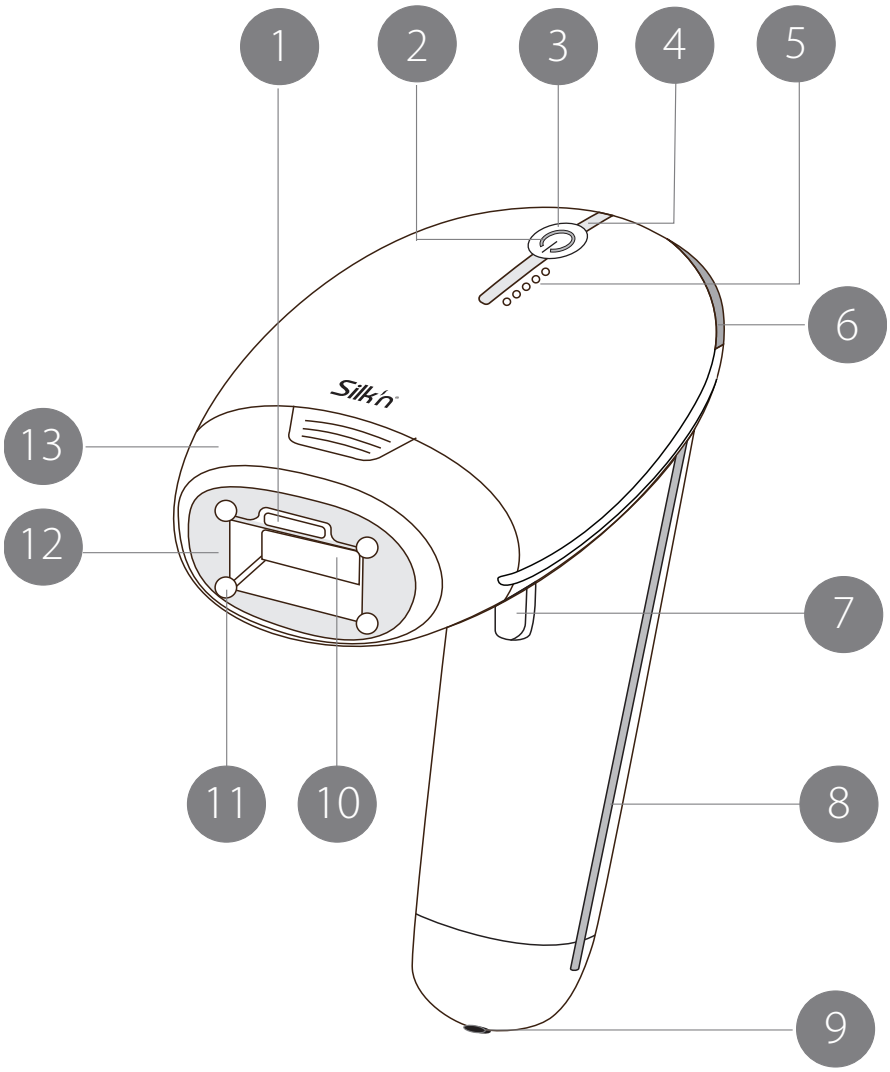

Hair color
Coleur de cheveux
Color de pelo

Skin color / Couleur de peau / Color de piel

1 - 5 1 - 5 1 - 4 1 - 3 1 - 2

Energy / Énergie / Energía

Table of contents

1. Warnings 2
2. Contraindications 4
3. Safety with Silk'n 6
4. Get to know your device 6
5. Treatment 11
6. Get started! 13
7. Cleaning, maintenance & storage 15
8. Connecting with the device 16
9. Troubleshooting 16
10. Customer service 17
11. Warranty 17
12. Disposal 17
13. Labeling 18
14. Signs & symbols 18
15. Specifications 19
16. FCC Radio frequency interference statement 20
17. Technical results 21
18. Legal notice 22

EN

Infinity Silkn 7 MDD NA with Bluetooth PB120212A ENG ED909-02 clean combined

1. Warnings

Please read this user manual in full before use. We recommend you refamiliarize yourself with the instructions before each treatment session. Do not use the device for any purpose other than as described in this user manual.

⚠ Electricity and safety warnings

- Always keep the device or any of its parts dry. Ensure that your hands are dry before connecting the adaptor to the electricity supply.
- Do not use the device while bathing or taking a shower.
- Do not use this appliance near bathtubs, showers, basins or other vessels containing water.
- Do not attempt to reach for the device if it has fallen into water.
- Keep the adaptor accessible at all times, so it can be removed from the electricity supply easily in case of emergency. Never pull the adaptor by the cable.
- Never use the adaptor if it has a damaged cable or plug, or isn't working properly, or has been submerged in water. If that happens, unplug the adaptor immediately before touching it. Failure to unplug the adaptor may result in an electric shock!
- Always switch the device off and disconnect it from the electricity supply when you are not using the device, when you intend to clean it, or in the event of a fault.
- Do not operate the device in environments where there is a risk of explosion. Keep the device and all its parts away from open flames and hot surfaces.
- Never leave the device unattended when connected to the electricity supply. Keep the adaptor accessible at all times, so it can be removed from the electricity supply easily in case of emergency.
- Always switch the device off and disconnect it from the electricity supply when you are not using the device, when you intend to clean it, or in the event of a fault.

- The appliance is only to be used with the power supply unit provided with the device.
- Never pull the adaptor out of the socket by the cable. Always remove it by taking hold of the adaptor.
- Do not kink the adaptor cable or lay it over sharp edges. Place it in such a way that it does not pose a tripping hazard.
- Do not operate the device in environments where there is a risk of explosion. The device is not suitable for use in the presence of flammable anaesthetic mixture with air, oxygen or nitrous oxide. Keep the device and all its parts away from open flames and hot surfaces.
- Possible hazardous optical radiation is emitted from this device. Do not look at the operating lamp. Eye injury may result.
- Do not use the device where there is monitoring equipment (e.g., cardiac monitors, ECG alarms), which may not operate properly when the device is in use. Changes or modifications to this device not expressly approved by the party responsible for compliance could void the user's authority to operate the equipment.
- Do not use the device in close proximity (e.g. 1 m) to shortwave or microwave therapy Medical equipment which may produce instability in device Galvanic current output.
- Never use the device if the yellow window of the treatment surface is cracked or broken.
- Do not use if the parts or accessories are not supplied by the manufacturer as defined in this manual, or if the device is damaged in any way, does not appear to be working properly, or if you see or smell smoke. In such cases, stop using the device and contact Customer Service.
- Only authorized personnel are permitted to perform repairs. Do not attempt to modify, open or repair the device. You may expose yourself to dangerous electrical components and may cause serious harm to yourself. It will also void the warranty.
- Children must not play with the device or any of its parts including the packaging. They may injure themselves or swallow small parts and choke.
- Children should be supervised to ensure that they do not play with the device.

Infinity Silkn 7 MDD NA with Bluetooth PB120212A ENG ED909-02 clean combined

- Cleaning and user maintenance shall not be made by children without supervision.
- Do not dispose with household waste! The law requires that you dispose of this electrical device (including all accessories and parts) at a designated recycling collection point for electrical devices. For details see section 12. Disposal.

EN

2. Contraindications

The device is not designed for everyone. Hair removal by intense pulsed light sources can cause increased hair growth in some individuals, although it is extremely rare (less than 1% of the population). Potential areas for women are the face and neck, and for men, the back, shoulders and upper arms, although it could also affect other areas. The highest risk groups are people from the Mediterranean, Middle East and South Asia. If you are not sure if the device is for you, please contact your dermatologist.

The device must not be used by the following people: children, people under the age of 17, adults with limited physical, sensory or psychological capacities, or those lacking experience or knowledge in how to use the device.

⚠ **Do not use the device if you:**

- have naturally dark skin (refer to the skin color chart at the front of this user manual). Treating dark skin can result in adverse effects such as burns, blisters, and skin color changes (hyper- or hypo-pigmentation).
- have naturally white, grey, blond and red body hair. If your body hair is of these colors, the device will not work on you.
- are pregnant or nursing.
- have been on a steroid regimen within the past 3 months.
- have a history of keloidal scar formation, a known sensitivity to light (photosensitivity) or are taking medication that makes the skin more sensitive to light, including non-steroidal anti-inflammatory agents, (e.g., aspirins, ibuprofens, acetaminophen), tetracyclines, phenothiazines, thiazide, diuretics, sulfonyluraes, sulfonamides, DTIC, fluorouracil, vinblastine, griseofulvin, Alpha-Hydroxi Acids (AHAs), Beta-Hydroxi Acids (BHAs), Retin-A®, Accutane® and/or topical retinoids.
- have been treated with Accutane® (isotretinoin) within the past 6 months.
- are currently or have recently been treated with Alpha-Hydroxi Acids (AHAs), Beta-Hydroxi Acids (BHAs), Retin-A®, topical retinoids or azelaic acid.
- have suffered or suffer from epilepsy.
- have an active implant, such as a pacemaker, incontinence device, insulin pump, etc.
- have a disease related to photosensitivity, such as porphyria, polymorphic light eruption, solar urticaria, lupus, etc.
- have a history of skin cancer or areas of potential skin malignancies.
- have received radiation therapy or chemotherapy treatments within the past 3 months.
- have received drugs from your physician for a skin condition within the past 6 months.
- are allergic to metal, or are sensitive to contact with chrome.

- cannot sense hea properly because of an illness, or other health related issue.
- were exposed to strong sunlight or an artificial tanning machine during the past 4 weeks.
- have any other condition which in your physician's opinion would make it unsafe for you to use the device.

EN

⚠ Do not use on these parts of the body:

- Areas where you have metal braces or a metal implant. Consult your physician if you are in any doubt.
- Near the thorax, the Galvanic current may increase the risk of cardiac fibrillation.
- On tanned skin. Refer to section 3.3 Exposure to the sun.
- Around or near the eyes. Use below the cheekbones.
- On the mouth, on the front of the neck (especially the carotid sinus), or from electrodes placed on the chest and the upper back or crossing over the heart.
- On tattoos or permanent makeup, dark brown or black spots, (such as large freckles, moles, or warts), nipples, genitals, around the anus, or lips.
- Areas with injected fillers or toxins.
- A part of the body that has a history of herpes outbreaks.
- Skin that has active eczema, psoriasis, lesions, open wounds or infections (cold sores), abnormal skin conditions caused by systemic or metabolic diseases (diabetes for example).
- Areas that are prone to rosacea.
- On varicose veins.
- Areas that are painful.
- Areas where you may want hair to grow later. The results are long-lasting.

⚠ Additional warnings

- Select the energy setting carefully. When the energy intensity is increased, hair removal improves, but the risk of side effects and complications increases.
- Follow the hair and skin color chart when selecting energy levels to avoid the risk of burns, blisters or changes in skin color (see the chart at the front of the manual).
- Always do a spot test before you treat a specific part of your body.
- Do not treat the same area of skin more than once per hair removal session.
- Avoid overlapping pulses or gaps when you treat an area.
- Use a lower energy level if you experience mild discomfort.
- Do not expose treated areas to the sun, and do not use energy levels 2-5 on tanned skin or after recent sun exposure (including artificial tanning machines). Refer to section 4.9 How to treat if you have been in the sun.
- Stop use immediately if you see full redness of the skin, blistering or burns.
- Stop use immediately if you have any pain.
- Stop use immediately if the skin or the device becomes too hot.

EN

3. Safety with Silk'n

With Silk'n, device safety comes first. Enhanced Home Pulsed Light™ (eHPL) technology provides superior safety with lower energy levels.

eHPL™ achieves long term hair removal results at a fraction of the energy level used in other light-based hair removal equipment. The technology combines 2 energy sources: Galvanic energy and Optical energy. The Galvanic energy enables better penetration of the Optical energy to the hair shaft by temporarily widening the skin pores. The hair shaft absorbs the light, deactivates the hair follicle and hair growth is disabled.

3.1 Skin protection

Light-based hair removal is not suitable for tanned skin. The device comes with a built-in skin color sensor (**#1**) that is designed to measure the complexion of the applied surface and enables energy levels according to skin complexion. The low energy used reduces its potential to cause harm or complications and contributes to your overall safety.

Furthermore, the treatment surface (**#10**), through which pulses of light are delivered, is recessed inside the device. This enables the device to protect your skin by avoiding direct contact between the treatment surface (**#10**), and the skin.

3.2 Eye protection

The device has a built-in safety feature for eye protection. It has been designed so that a light pulse cannot be emitted when the treatment surface (**#10**) is facing open air. The safety feature enables treatment only when the treatment surface (**#10**) is in contact with the skin.

3.3 Exposure to the sun

- Sun exposure includes constant unprotected exposure to direct sunlight for over 15 minutes, or constant unprotected exposure to diffuse sunlight for over 1 hour.
- Do not use on tanned skin after recent sun exposure, including tanning machines. Using the device on skin that has been recently exposed to sunlight can result in adverse effects such as burns, blisters, and skin color changes (hyper- or hypopigmentation).
- Avoid further exposure to the sun for **4 weeks before and 2 weeks after** your treatment. This is because higher quantities of melanin expose the skin to greater risk when using any method of light-based hair removal. This applies to all skin types, even those that don't seem to tan quickly.
- We don't advise it, but if you have to go out in the sun after a treatment, be sure to apply sunscreen SPF30 or higher to the treated area. Do this for 2 weeks after a treatment (see section 4.9 How to treat if you have been in the sun).

4. Get to know your device

The device is a powerful electrical device and should be used with special attention to safety.

Before use, **it is important that you read and understand the instructions on how to use the device including after-use procedures**, **and follow them strictly**. We recommend you familiarise yourself with the instructions in this manual before each treatment session.

4.1 Package contents

- Hair removal device
- Replaceable cartridge x3
- Power adaptor
- Extension cable (USA / Canada)
- Cleaning cloth
- Beauty case
- Razor
- User manual

EN

4.2 Device features

The device is a home-use device using eHPL™ technology for the removal of unwanted hair. The device has a treatment surface and a pulse button. It also has a pair of electrodes, base and touch, for creating and utilizing a Galvanic treatment circulation. Refer to the diagram at the front of the manual to see the location of each feature.

- Skin color sensor (**#1**)
- On indicator light (green) /communication indicator light (blue) (**#2**)
- Control button (**#3**)
- Automatic energy level setting indicator light (green) (**#4**)
- Energy level indicator lights (1-5) (**#5**)
- Ready light (green) /skin tone warning indicator light (orange) (**#6**)
- Pulse button (**#7**)
- Base electrode (**#8**)
- Adaptor socket (**#9**)
- Treatment surface window (**#10**)
- Contact electrode (**#11**)
- Galvanic energy electrode (**#12**)
- Replaceable cartridge (**#13**)

4.3 Intended use

The device is intended for removal of unwanted hair. The device is also intended to effect long term or permanent hair reduction. Permanent hair reduction is defined as a long-term stable reduction in the number of hairs regrowing after a treatment regime. You may use the device to remove unwanted body hair. Ideal body areas include the underarms, bikini line, arms, legs, face (below the cheekbones), back, shoulders and chest.

The device is intended for self treatment only. Do not operate the device on an individual other than yourself.

Do not use for any purpose other than as described in this manual.

4.4 Device controls

Control	Function / Mode
Control button - long press (**#3**)	• A long press turns the device on or off. When **on**, the control button (**#3**) is green. • When the device is **on**, the energy level is in automatic mode and all energy level indicator lights (**#5**) are **off**.

EN

Control	Function / Mode
Control button - short press (**#3**)	• When the energy level is lower than 5, a short press increases the level by 1 increment. The device sets itself to manual mode and the automatic energy level setting indicator light (green) (**#4**) is **off**. • When you are at energy level 5, a short press moves the device to automatic mode and all energy level indicator lights (**#5**) are **off**. The automatic energy level setting indicator light (**#4**) will be constant green. • If you are in automatic mode, a short press moves the device to manual mode and increments the level by 1 increment.
Pulse button (**#7**)	Triggers a light pulse.
Base electrode (**#8**)	Triggers a light pulse when pressed together with the pulse button (**#7**).
Ready light (green) / skin tone warning indicator light (orange) (**#6**)	• **Green constant:** When the device is turned **on**. • **Light off:** The device is getting ready for the next pulse. • **Green blinks:** The device is in contact with the treatment area. • **Orange blinks:** The device cannot detect the skin color.
Energy level indicator lights (green) (**#5**)	• **Green constant:** The energy is active. The number of lights on corresponds to the energy level selected.
Automatic energy level setting indicator light (green) (**#4**)	• **Green constant:** The energy level is set automatically according to the skin tone detected.

4.5 Device sensors

The device has sensors for touch and color.

◉ **Touch:** The device will only emit pulses when at least 3 contact electrodes (**#11**) are in firm contact with your skin.

◉ **Color:** Light-based hair removal on darker skin tones may result in adverse effects such as burns, blisters, and skin color changes (hyper- or hypopigmentation). The device has a skin color sensor (**#1**) that detects the color of your skin automatically. The skin color sensor (**#1**) checks your skin color at the start of, and occasionally during, each treatment.

(!) If the device detects that your skin tone is too dark for safe use, the ready light/skin tone warning indicator light (**#6**) will blink orange.

4.6 Energy levels

- The energy level determines the intensity of the light pulse delivered to your skin. As the energy level increases, so do the results, as well as the risk of possible side effects and complications (see section 5.2 Possible side effects).
- The device has 5 levels of energy from 1 (the lowest) to 5 (the highest), represented by 5 energy level indicator lights (**#5**). To change levels, short press the control button (**#3**).
- To set manually the right energy level for your treatment area (see section 6.4 Do a spot test).
- The device at automatic setting sets the energy level automatically according to the skin tone measured by the device.

ℹ Do not increase energly levels during a treatment session even if you feel discomfort. Discomfort may appear some time after a treatment session.

ℹ Always begin your first use at the lowest energy setting!

ℹ Follow the skin color chart when selecting energy levels to avoid the risk of burns, blisters or changes in skin color (see the skin color chart at the front of the user manual).

4.7 Automatic and manual modes

The device has two modes: automatic and manual.

Automatic: When the pulse button (**#7**) is pressed, the device releases a pulse using the maximum energy level that is suitable for your skin type. There is no need to select the right energy level yourself; this will happen automatically. For example, if you have skin type 1, the pulse emitted will be at energy level 5 because that's the highest energy level allowed for your skin type. The darker the skin tone, the lower the energy level. You can see the different skin types in the table in section 5.1 Treatment plan.

Manual: You set the energy level manually. Each short press increases the energy level by 1 increment. However, if you set the energy level higher than the level suited to your skin type, the device will not release a pulse, and the ready light / skin tone warning indicator light (**#6**) will blink orange.

4.8 Pulsing and gliding

Whether you decide to pulse or glide:

- Avoid gaps or overlaps as you use the device. Overlaps increase the likelihood of adverse affects.

⚠ Do not treat the same area of skin more than once per treatment session.

⚠ Stop use immediately if you have any pain, or if the skin becomes too hot.

EN

Infinity Silkn 7 MDD NA with Bluetooth PB120212A ENG ED909-02 clean combined

EN

Pulsing is the best technique for treating specific spots or small areas.

- Press the treatment surface (**#10**) against your skin. Work in rows (either across or down as shown in the image). Start at one end of each row and progress to the other end. The treatment surface (**#10**) creates temporary pressure marks on the treated area so you can see areas you have treated.
- After each pulse, move the treatment surface (**#10**) to the next spot. Keep doing this pulsing action for the area you are treating.

Gliding is the best technique for treating larger parts of the body.

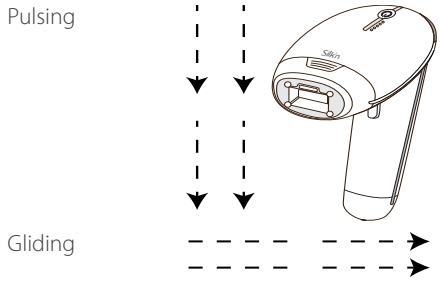

- Press the treatment surface (**#10**) firmly against your skin and slowly glide over your skin (either across or down as shown in the image). Make sure that the treatment surface (**#10**) is always touching your skin.
- At lower energy levels, the device takes only 0.5 - 2.6 seconds to recharge between pulses. This generates a nonstop sequence of flashes.

4.9 How to treat if you have been in the sun

- Sun exposure includes constant unprotected exposure to direct sunlight for over 15 minutes, or constant unprotected exposure to diffuse sunlight for over 1 hour.
- Do not use on tanned skin after recent sun exposure, including tanning machines. Using the device on skin that has been recently exposed to sunlight can result in adverse effects such as burns, blisters, and skin color changes (hyper- or hypo-pigmentation).

⚠ Avoid further exposure to the sun for **4 weeks before and 2 weeks after your treatment.** This is because higher quantities of melanin expose the skin to greater risk when using any method of light-based hair removal. This applies to all skin types, even those that don't seem to tan quickly.

- We don't advise it, but if you have to go out in the sun after a treatment, be sure to apply sunscreen SPF30 or higher to the treated area. Do this for 2 weeks after a treatment.

4.10 Exposure of pulsed light to the eyes

Although you can use the device to treat facial hair, take extra care to avoid contact with the eyes, and use only below the cheekbones.

(!) The device will only emit repeated pulses when it is in firm contact with your skin, and you keep moving it across your skin.

4.11 What to expect with the device

During a device treatment session it is normal to experience and feel:

- **A fan noise:** The cooling fan makes a noise similar to that of a hair dryer.
- **A popping sound with each pulse:** When a pulse of eHPL™ light is activated, it is normal to hear a subtle pop sound simultaneously with the flash of light.
- **A sensation of warmth and tingling:** During each Galvanic pulse sequence it is normal to feel a mild sensation of warmth and tingling from the Galvanic and light energies.
- **Some mild red or pink color:** During and just after your treatment session it is not uncommon to see some very mild, pink-like color of the skin. This is usually most noticeable around the hairs themselves.

⚠ Stop use immediately if you see full redness of the skin, blistering or burns.

EN

5. Treatment

5.1 Treatment plan

A typical full hair growth cycle may take 18-24 months. During this time multiple device treatment sessions may be required in order to achieve long-lasting hair removal.

The efficiency of hair removal varies from person to person according to body area, hair color and how the device is used.

Typical treatment plan during a full hair growth cycle:

- **Treatments 1-4:** Plan two weeks apart.
- **Treatments 5-7:** Plan four weeks apart.
- **Treatments 8+:** Treat as needed, until desired results are achieved.

Ideal body areas include underarms, bikini area, arms, legs, back shoulders and chest (excluding nipples). For the face, use below the cheekbones but not around or near the eyes or lips.

Skin Type[1]	Body Hair[2]	Light Fluence [J/cm²]	Area of the Body	Average Treatment Time	% Hair Reduction
I-6	Dark blond to brown	2.5-4	Lower or upper legs	Session 10-12, approx. four weeks apart.	60%
			Arms		50%
			Bikini Line		60%
			Underarms		55%
I-6	Brown to black	2.5-4	Lower or upper legs	Session 8-10, approx. four weeks apart.	70%
			Arms		60%
			Bikini Line		70%
			Underarms		65%

[1] Individual response depends on hair type as well as biological factors that may affect hair growth patterns. Some users may respond quicker or slower than the average number of treatments.

[2] One cannot expect permanent hair removal in a single or even double treatment sessions. The duration of the resting period for hair follicles also depends on the body area.

EN

5.2 Possible side effects

When used according to the instructions, side effects and complications associated with the use of the device are uncommon. However, every cosmetic procedure, including those designed for home use, involves some degree of risk. Therefore, it is important that you understand and accept the risks and complications that can occur with pulsed light hair removal systems designed for home use.

There is a minor risk that stacking or overlapping of multiple pulses on the same skin spot may have some adverse effects.

Minor skin discomfort

Home pulsed light hair removal is generally well-tolerated. However, some users feel mild discomfort during use. This is best described as a mild stinging sensation on the treated skin areas. The stinging sensation may last during or after treatment.

This means that you should use the device at a lower energy level, and if that doesn't help, you should stop using the device.

Skin redness

Your skin may become red immediately after using the device or within 24 hours. Redness generally clears up within 24 hours. **See your doctor if redness does not go away within 2 to 3 days**.

Make sure you use the energy level that is comfortable for you and suitable for your skin color.

Increased sensitivity of the skin

The skin of the treated area is more sensitive so you may encounter dryness or flaking of the skin.

Pigment changes

The device targets the hair shaft, in particular the pigmented cells in the hair follicle and the hair follicle itself. Nevertheless there is a risk of temporary hyper-pigmentation (increased pigment or brown discoloration) or hypo-pigmentation (whitening) to the surrounding skin. Risk of changes in skin pigmentation is higher for people with darker skin tones or heavily tanned skin. Usually discoloration or changes to skin pigment are temporary, and permanent hyper-pigmentation or hypo-pigmentation are rare.

Excessive redness and swelling

In rare cases, treated skin may become very red and swollen. This is more common in sensitive areas of the body. The redness and swelling should subside within 2 to 7 days and should be treated with frequent applications of ice. Gentle cleansing is OK, but avoid exposure to the sun.

Blisters or burns; skin wounds

It is very unusual but blister, burns or wounds to the skin may occur following a treatment. These can require a few weeks to heal, and in very rare cases, may leave a noticeable scar.

Cool the affected area and apply anti-burn cream. Wait until the area has healed completely before another treatment, and use a lower energy level.

If the skin does not return to normal within 3 days, consult your physician.

EN

Scarring

Although very rare, scarring may occur. Usually when scarring occurs, it is in the form of a flat and white lesion on the skin (hypotrophic). However, it can be large and red (hypertrophic) or large and extend beyond the margins of the injury itself (keloid). Subsequent aesthetic treatments may be required to improve the appearance of the scar.

Infection or bruising

Infection of the skin is exceedingly rare but is still a possible risk following a skin burn or wound caused by the device.

Very rarely, the device may cause blue-purple bruising that can last 5 to 10 days. As the bruising fades, there may be a rust-brown discoloration of the skin (hyperpigmentation).

⚠ Stop use immediately if any of these side effects are more severe.

⚠ See your physician if the side effects do not go away within 2 to 3 days.

6. Get started!

6.1 Assemble the replaceable cartridge

1. For each body area, it is important to choose the correct replaceable cartridge.
2. To place the cartridge (**#13**), snap it onto the treatment surface window (**#10**). To remove the cartridge, pull it off the treatment surface window.

Cartridge Size	Treatment Area
Small	Face, upper lip and sideburns, bikini line and underarms
Medium	Bikini line, underarms
Large	The body below the neckline

6.2 Connecting the device

1. Remove the device and other components from box.
2. Plug the adaptor into the adaptor socket (**#9**) and plug the adaptor into the electricity supply. All indicator lights (**#2**, **#4**, **#5**, **#6**) will turn on, and then go off.

EN

6.3 Pre-treatment preparation

⚠ Remove all jewelrey on or near the treatment area before use.

1. Before treating an area, the skin should be shaved, clean, dry and free of any powders, antiperspirants or deodorants. **Do not wax**, **pluck or tweeze the hair out**.

⚠ Never use flammable liquids such as alcohol (including perfumes, sanitizers, or other applications containing alcohol), or acetone to clean the skin before use.

⚠ Do not use the device if the treatment surface (**#10**) is broken or missing.

2. Be sure to cover up moles, warts or other marks on the skin that should not be treated. Use a material that does not absorb the light such as a white cloth or white medical tape.

6.4 Do a spot test

It's important to do a spot test on each part of the body you wish to treat. A spot test checks that the skin color is suitable for treatment, and that you know which energy level is comfortable for the area you are treating. Both skin color and energy level may vary depending on the target treatment area.

1. Press the control button (**#3**) to turn on the device. The automatic energy level setting indicator light (green) (**#4**) will go on.
2. Place the treatment surface (**#10**) on your skin and press the pulse button (**#7**) to deliver one pulse. Make sure your hand touches the base electrode (**#8**) together with the pulse button (**#7**). When the treatment surface (**#10**) is in full contact with the skin, the ready light / skin tone warning indicator light (**#6**) will start blinking green slowly.
3. If you do not experience abnormal discomfort press the control button (**#3**) again. This will increase the energy level by one increment.
4. Press the pulse button (**#7**) with your hand touching the base electrode (**#8**) to deliver another pulse on a different spot at energy level 2. Continue testing at increased energy levels. Use the energy levels indicated on the skin color chart. When you find the highest energy level that is comfortable for that treatment area, you can start your treatment.

⚠ Use a lower energy level if you experience discomfort.

You are now ready to perform a treatment.

6.5 Treatment steps

1. Press the control button (**#3**). The device will turn on, the automatic energy level setting indicator light (**#4**) will be green, and a fan sound will start.
2. After pressing the control button (**#3**), the ready light /skin tone warning indicator light (**#6**) will be green. The device is then ready to use at the lowest energy level. Always start at energy level 1 for your first treatment.
3. **Set the energy level**. Press the control button (**#3**) repeatedly to increase the energy level until you have the level you want. The energy level indicator lights (**#5**) indicate the energy level setting (see section 4.6 Energy levels). The number of energy level indicator lights (**#5**) that are on, indicates the energy level selected.

4. Decide if you wish to treat the area by **Pulsing** or **Gliding** (see section 4.8 Pulsing and gliding).
5. Apply the treatment surface (**#10**) to the skin. Press the pulse button (**#7**). The device will first determine the color of your skin automatically. If the skin color is light enough for safe application, the device will activate the Galvanic energy. You will feel a mild sensation of warmth and tingling, and you may hear a popping sound. This is completely normal. The Galvanic energy works to enlarge your pores for a better application of the treatment.

EN

(!) If your hand does not touch the base electrode (**#8**) no Galvanic energy will be emitted.

6. Directly afterwards, the device will flash a pulse of light onto your skin, and the ready light / skin tone warning indicator light (**#6**) will turn off. You will see a bright flash of light and simultaneously hear a popping sound, which is a normal noise for the device. You will feel a mild sensation of warmth and tingling. The device will immediately recharge for the next pulse.
7. If you are **Pulsing**, repeat the process. If you are **Gliding**, simply continue. Continue to pulse or glide until you have treated the area fully.

(!) Avoid gaps or overlaps.

(!) The device will only emit repeated pulses when it is in firm contact with your skin, and you keep moving it across your skin.

⚠ Stop use immediately, if your skin blisters or burns, if you feel very uncomfortable, or if the device gets too hot.

6.6 After treatment

When you have finished your treatment session:

1. Long press the control button (**#3**) to switch off the device. Remember the last energy level setting you used, because it will not be restored when you turn the device on again.
2. Disconnect the adaptor from the electricity supply, then clean the device and store safely (see section 7. Cleaning, maintenance & storage.
3. After your treatment session we recommend you apply a body lotion to the treated area to help your skin recover from the treatment faster.

7. Cleaning, maintenance & storage

- Disconnect the device from the electricity supply.
- To clean the device including the treatment surface (**#10**), wipe with a clean, dry cloth and 70% alcohol. Never use acetone or other abrasive fluids, because they will damage your device.
- Use a wipe to dry the device.
- After cleaning, we recommend you store the device in its original box.

⚠ Never immerse the device or any of its parts in water.

EN

8. Connecting with the device

The free Silk'n Hair Removal application supports your every step with Silk'n hair removal devices. The app creates your personalized treatment plan, helps you make the safest and most informed choices, and makes sure you follow through the entire course of treatment for best results.

As a device owner you can also enjoy Bluetooth connectivity. Just download the application and follow the registration process and Bluetooth pairing steps.

For a free download of the Silk'n hair removal app, scan:

9. Troubleshooting

Only authorized personnel are permitted to perform repairs. Do not attempt to modify, open or repair the device. You may expose yourself to dangerous electrical components and may cause serious harm to yourself. It will also void the warranty.

Problem	Checks
My device does not start.	• Check that the adaptor is properly connected to the device and that it is plugged into the electricity supply.
There is no Galvanic pulse when I press the pulse button (**#7**).	• Check that your hand is touching the base electrode (**#8**) when you press the pulse button (**#7**). • The Galvanic energy is only active when the Galvanic circuit is closed. This is achieved by pressing the pulse button (**#7**) and the base electrode (**#8**) at the same time.
There is no light pulse when I press the pulse button (**#7**).	Check that: • the ready light / skin tone warning light (**#6**) is green and blinks slowly. • the treatment surface (**#10**) is evenly and firmly pressed against the skin. The pulse button only activates pulses when the device is pressed firmly against the skin. • the ready light / skin tone warning indicator light (**#6**) is not orange. If it is and blinks rapidly, this is an indication that your skin is too dark for safe use. Try using the device on a different area.
There is no light pulse when the device touches my skin.	Check that: • the device is connected and that the ready light/ skin tone warning indicator light (**#6**) is green and blinking. • the treatment surface (**#10**) is evenly and firmly pressed against the skin. • It may also be that your skin color is too dark.
The ready light /skin tone warning indicator light (**#6**) blinks orange.	• The skin color is too dark.

Problem	Checks
One or more lights are on constantly.	• The device has malfunctioned.
The device has stopped working and is in standby mode.	• Press the control button (**#3**) again to start the device.

EN

10. Customer service

For more information about Silk'n products, visit your regional Silk'n website: www.silkn.com or www.silkn.ca. If the device is damaged, defective, in need of repair or if you need our assistance, please contact your nearest Silk'n service center. This manual is also available as a PDF download from these websites.

Our contract details are:

Service number: 1-800-250-5053 (toll-free)
Email: customercarena@silkn.com

11. Warranty

This product is covered by a 1-year warranty. The extent of the warranty on this product is limited to technical defects caused by faulty production processes. In the event you want to claim warranty please be sure to contact our customer service for instructions. They may be able to solve your problem without needing to return the product to the store or our service centre. Our customer service is always pleased to help you!

The manufacturer accepts no liability for damage or injuries caused by improper or incorrect use.

12. Disposal

Dispose of the packaging separated into single type materials. Dispose of cardboard and carton as waste paper and film via the recyclable material collection service.

Do not dispose with household waste! The WEEE directive requires that you dispose of this electrical device (including all accessories and parts) at a designated recycling collection point for electrical devices. This ensures that the device is recycled professionally, and prevents the release of harmful substances * into the environment. Make sure that the device is in an uncharged state before disposal.

* Products labelled with Cd = cadmium, Hg = mercury, Pb = lead

Infinity Silkn 7 MDD NA with Bluetooth PB120212A ENG ED909-02 clean combined

EN

13. Labeling

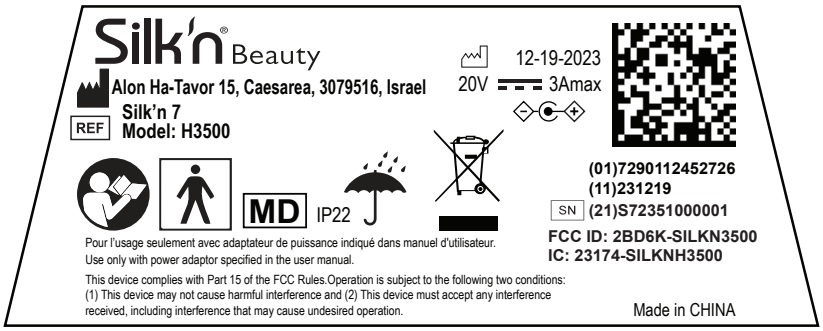

The image is for illustration purposes only.

ℹ This device is not suitable for use in the presence of flammable anaesthetic mixture with air or with Oxygen or Nitrous Oxide.

14. Signs & symbols

	Important information about using or maintaining the device
	A statement or event that indicates a possible or impending danger, problem, or other unpleasant situation when using the device.
	Do not dispose with household waste! Dispose in accordance with your country's laws and help protect the environment. In accordance with the WEEE directive.
	Follow the instructions for use.
IP22	The device is protected against the ingress of objects larger than 12.5mm diameter, such as fingers, to protect against electric shock and is protected from water spray less that 15 degrees from vertical.
	Polarity.
	Degree of protection against electric shock. BF applied part.

	Keep dry.
	Manufacturer.
	Manufacture date.
SN	Serial number.
MD	Medical device.
REF	Reference number.

EN

15. Specifications

Model	H3500
Galvanic	70-400 Microampere (µA)
Spot size	1.70cm x 3.0cm [5.10cm^2] 0.81cm x 3.0cm [2.43cm^2] 0.81cm x 1.2cm [0.97cm^2]
Technology	Enhanced Home Pulsed Light™
Max energy level	Max 3-5J/cm^2
Wavelength	520-1200nm
Pulse light duration	500-800µs
Mode of operation	Continuous
Repetition rate	2.0 [Hz] maximum
System weight	520 (gr)
Transport & storage between uses and storage condition	Temperature: - 40° to +70°C Relative humidity: 10% - 90% rH Atmospheric pressure: 500 - 1060hPa
Operating condition	Temperature: 10° - 35°C Relative humidity: 30% - 75%rH Atmospheric pressure: 700 - 1060hPa
Time from minimum storage temperature between uses to minimum operating temperature with ambient temperature of 20°C	30 minutes

Infinity Silkn 7 MDD NA with Bluetooth PB120212A ENG ED909-02 clean combined

EN

Time from maximum storage temperature between uses to maximum operating temperature with ambient temperature of 20°C	30 minutes
Protection against electric shock	Class II medical equipment type BF applied part
Adaptor	
Model identifier	KSA-60B-200300D5
Input Output	100-240V; 50-60Hz; 1.8A 20.0Vdc; 3.0A; 60.0W
Average efficiency Efficiency at low load (10 %) No-load power consumption	91.7% 88.7% 0.11W
RF Connectivity Operating frequency Max output power Power density	 2,402 MHz ~ 2,480MHz 0.417 mW 0.02652 mW/cm^2
Status of safety	The device was tested and complies with: • IEC 60601-1 (Safety) • IEC 60601-1-2 (EMC) • IEC 60601-1-11 (Environment) • IEC 60601-2-10 (Stimulation) • IEC 60601-2-57 (Safety of non-laser source)
Service life of equipment	5 years

16. FCC Radio frequency interference statement

This equipment has been tested and found to comply with the limits for a Class B digital device, pursuant to part 15 of the FCC Rules. These limits are designed to provide reasonable protection against harmful interference in a residential installation. This equipment generates uses and can radiate radio frequency energy and, if not installed and used in accordance with the instructions, may cause harmful interference to radio communications. However, there is no guarantee that interference will not occur in a particular installation. If this equipment does cause harmful interference to radio or television reception, which can be determined by turning the equipment off and on, the user is encouraged to try to correct the interference by one or more of the following measures:

- Reorient or relocate the receiving antenna.
- Increase the separation between the equipment and receiver.
- Connect the equipment into an outlet on a circuit different from that to which the receiver is connected.
- Consult the dealer or an experienced radio/TV technician for help.

Silk'n Beauty Ltd. is not responsible for any radio or communication interference caused by using other than specified or recommended cables and battery or by unauthorized changes or modifications to this equipment. Changes or modifications not expressly approved by the manufacturer could void the user's authority to operate the equipment.

This device complies with part 15 of the FCC Rules. Operation is subject to the following two conditions:

1. This device may not cause harmful interference, and
2. This device must accept any interference received, including interference that may cause undesired operation.

EN

17. Technical results

The use of accessories other than those specified or sold by Silkn Beauty Ltd. as replacement parts may have the consequence of increasing the emissions or decreasing the immunity of the device. The device is intended for use in the electromagnetic environment specified in the Summary of Test Results.

EMC requirements

IEC 60601-1-2 Edition 4.1 (2020)
Environment of intended uses: Professional Healthcare and Home Healthcare Environment

Summary of Test Results

Test	Standard	Class/ Severity level	Test result
Emission (IEC 60601-1-2 sections 7.1 & 7.2)			
Conducted emission Freq. range:150 kHz - 30 MHz	CISPR 11	Group 1 Class B: AC mains 230 VAC & 120 VAC 50 Hz	Complies
Radiated emission Freq. range: 30 - 1000 MHz	CISPR 11	Group 1 Class B	Complies
Harmonic current emission test	IEC 61000-3-2	230VAC 50Hz mains	Complies
Voltage changes, Voltage fluctuations and Flickertest	IEC 61000-3-3	230VAC 50Hz mains	Complies
Immunity (IEC 60601-1-2 sections 8.9, 8.10& 8.11)			
Immunity from Electrostatic discharge (ESD)	IEC 61000-4-2	8 kV contact discharges & 15 kV air discharges	Complies
Immunity from radiated electromagnetic fields	IEC 61000-4-3	10.0 V/m; 80 MHz ÷2.7 GHz, 80% AM, 1 kHz	Complies
Immunity from Proximity field from wireless communications equipment	IEC 61000-4-3	List of frequencies, from 9 V/m up to 28 V/m, PM (18 Hz or 217 Hz), FM 1 kHz	Complies
Immunity from Electrical Fast transient (EFT)	IEC 61000-4-4	± 2.0 kV - on AC mains; Tr/Th – 5/50 ns, 100 kHz	Complies
Immunity from Surge	IEC 61000-4-5	±1.0 kV DM on 230 VAC mains ; Tr/Th – 1.2/50 (8/20) µs	Complies
Immunity from conducted disturbances induced by radio-frequency fields	IEC 61000-4-6	3.0, 6.0 VRMS on 230 VAC mains 0.15÷ 80 MHz, 80% AM @ 1 kHz	Complies
Immunity from power frequency magnetic field	IEC 61000-4-8	30 A/m @ 50 /60 Hz	Complies
Immunity to proximity magnetic fields in range 9 kHz to 13,56 MHz	Section 8.11 IEC 61000-4-39	65 A/m @134.2kHz PM 2.1kHz 50% 7.5 A/m @13.56MHz PM 50kHz 50% 8A/m @ 30kHz CW	Complies
Immunity from voltage dips, short interruptions and voltage variations	IEC 61000-4-11	On 120 VAC & 230VAC 50 Hz; 0 % - 0.5 cycle & 1 cycle; 70% - 25/30 cycles; 0% - 250 cycles	Complies

18. Legal notice

Copyright 2024 © Silkn Beauty Ltd. All rights reserved.

EN

Silkn Beauty Ltd. reserves the right to make changes to its products or specifications to improve performance, reliability, or manufacturability. Information furnished by Silkn Beauty Ltd. Is believed to be accurate and reliable at the time of publication. However, Silkn Beauty Ltd. assumes no responsibility for its use. No license is granted by its implication or otherwise under any patent or patent rights of Silkn Beauty Ltd. No part of this document may be reproduced or transmitted in any form or by any means, electronic or mechanical, for any purpose, without the express written permission of Silkn Beauty Ltd. Data is subject to change without notification.

Silkn Beauty Ltd. has patents and pending patent applications, trademarks, copyrights, or other intellectual property rights covering subject matter in this document. The furnishing of this document does not give you any license to these patents, trademarks, copyrights, or other intellectual property rights except as expressly provided in any written agreement from Silkn Beauty Ltd. Specifications are subject to change without notice.

Silk'n and the Silk'n logo are registered trademarks of Silkn Beauty Ltd, Alon Ha-Tavor 15, Caesarea, 3079516, Israel www.silkn.com, www.silkn.ca, info@silkn.com.

PB120212A

Issue date: mm/2024

Silk'n® Beauty

Manufacturer:
Silkn Beauty Ltd, Alon Ha-Tavor 15,
Caesarea 3079516, Israel
www.silkn.com • www.silkn.ca • info@silkn.com