TEST REPORT

Applicant: **Address:**	**Dong Guan Qi You Zhi Neng Technology Co., Ltd.** **11F, Building 16B, Gold Town, No.7 Hetian Technology Avenue, Houjie Town, Dongguan City, Guangdong, P. R. China**		
Manufacturer: **Address:**	**Dong Guan Qi You Zhi Neng Technology Co., Ltd.** **11F, Building 16B, Gold Town, No.7 Hetian Technology Avenue, Houjie Town, Dongguan City, Guangdong, P. R. China**		
Factory: **Address:**	**Dong Guan Qi You Zhi Neng Technology Co., Ltd.** **11F, Building 16B, Gold Town, No.7 Hetian Technology Avenue, Houjie Town, Dongguan City, Guangdong, P. R. China**		
E.U.T.:	**Wireless Controller**		
Model Number:	**HS-SW570, SA5633**		
Trade mark:	**N/A**		
FCC ID:	**2BD8F-SW570**		
Date of Receipt:	**Dec. 21, 2023**	**Date of Test:**	**Dec. 21, 2023- Jan. 4, 2024**
Test Specification:	**FCC 47 CFR Part 15, Subpart C**		
Test Result:	**The equipment under test was found to be compliance with the requirements of the standards applied.**		

Prepared by:

Jerry Hu/ Engineer

Approved & Authorized Signer:

Frank Shen/ Manager

Issue Date: January 19, 2024

This test report is based on a single evaluation of one sample of above mentioned products. It is not permitted to be duplicated in extracts without written approval of Dongguan Lepont Service Co., Ltd.

TABLE OF CONTENTS

1. GENERAL PRODUCT INFORMATION 4

1.1. PRODUCT FUNCTION 4
1.2. EUT TECHNICAL DESCRIPTION 4
1.3. INDEPENDENT OPERATION MODES 5

2. TEST STANDARDS AND SITES 6

2.1. DESCRIPTION OF STANDARDS AND RESULTS 6
2.2. LIST OF TEST AND MEASUREMENT INSTRUMENTS 7
2.3. MEASUREMENT UNCERTAINTY 8
2.4. TEST FACILITY 8

3. SETUP OF EQUIPMENT UNDER TEST 9

3.1. RADIO FREQUENCY TEST SETUP 1 9
3.2. RADIO FREQUENCY TEST SETUP 2 9
3.3. CONDUCTED EMISSION TEST SETUP 11
3.4. BLOCK DIAGRAM CONFIGURATION OF TEST SYSTEM 11
3.5. SUPPORT EQUIPMENT 12

4. TEST RESULTS AND MEASUREMENT DATA 13

4.1. 20DB BANDWIDTH 13
4.2. CARRIER FREQUENCY SEPARATION 20
4.3. NUMBER OF HOPPING FREQUENCIES 27
4.4. AVERAGE TIME OF OCCUPANCY (DWELL TIME) 31
4.5. MAXIMUM PEAK CONDUCTED OUTPUT POWER 38
4.6. CONDUCTED SUPRIOUS EMISSION 45
4.7. RADIATED SPURIOUS EMISSION 63
4.8. CONDUCTED EMISSION TEST 73
4.9. ANTENNA APPLICATION 76

Revision History of This Test Report		
Report Number	Description	Issued Date
LP23120243C01-01	Initial Issue	2024-1-19

1. GENERAL PRODUCT INFORMATION

1.1. PRODUCT FUNCTION

Refer to Technical Construction Form and User Manual.

1.2. EUT TECHNICAL DESCRIPTION

Product Name:	Wireless Controller
Model No.:	HS-SW570, SA5633
Test Model No:	HS-SW570
Difference:	All the models have the same circuit diagram and PCB layout, except for model name
Serial No.:	N/A
Test sample(s) ID:	LP23120243C01-S002
Sample(s) Status	Engineer sample
Hardware:	V 1.0
Software:	V 1.0
Operation Frequency:	2402MHz-2480MHz
Channel numbers:	79
Channel separation:	1MHz
Modulation type:	GFSK, π/4-DQPSK, 8DPSK
Antenna Type:	PCB Antenna
Antenna gain:	3dBi
Power supply:	☒ DC 5V form USB ☒ DC 3.7V form battery

1.3. INDEPENDENT OPERATION MODES

The EUT has been tested under its typical operating condition.

The EUT configuration for testing is installed on RF field strength measurement to meet the Commissions requirement and operating in a manner which intends to maximize its emission characteristics in a continuous normal application.

The Transmitter was operated in the normal operating mode. The TX frequency was fixed which was for the purpose of the measurements.

Test of channel included the lowest and middle and highest frequency to perform the test, then record on this report.

Those data rates (1Mbps for GFSK modulation; 2Mbps for pi/4-DQPSK modulation; 3Mbps for 8DPSK modulation) were used for all test.

Pre-defined engineering program for regulatory testing used to control the EUT for staying in continuous transmitting and receiving mode is programmed.

Frequency and Channel list:

Channel	Frequency (MHz)	Channel	Frequency (MHz)	Channel	Frequency (MHz)
0	2402	39	2441	…	…
1	2403	40	2442	76	2478
2	2404	41	2443	77	2479
…	…	…	…	78	2480
Note: fc=2402MHz+(k-1)×1MHz k=1 to 79					

Test Frequency and channel

Lowest Frequency		Middle Frequency		Highest Frequency	
Channel	Frequency (MHz)	Channel	Frequency (MHz)	Channel	Frequency (MHz)
0	2402	39	2441	78	2480

2. TEST STANDARDS AND SITES

2.1. DESCRIPTION OF STANDARDS AND RESULTS

The EUT have been tested according to the applicable standards as referenced below.

FCC Part Clause	Test Parameter	Verdict	Remark
15.247(a)(1)	20 dB Bandwidth	PASS	
15.247(a)(1)	Carrier Frequency Separation	PASS	
15.247(a)(1)	Number of Hopping Frequencies	PASS	
15.247(a)(1)	Average Time of Occupancy (Dwell Time)	PASS	
15.247(b)(1)	Maximum Peak Conducted Output Power	PASS	
15.247(d)	Conducted Spurious Emissions	PASS	
15.247(d) 15.209	Radiated Spurious Emissions	PASS	
15.207	Conducted Emission	PASS	
15.203	Antenna Application	PASS	
15.247 (a) (1)/g/h	Frequency Hopping System	PASS	

NOTE1: N/A (Not Applicable)
NOTE2: According to FCC KDB 558074 D01 15.247 Meas Guidance v05r02, the report use radiated measurements in the restricted frequency bands. In addition, the radiated test is also performed to ensure the emissions emanating from the device cabinet also comply with the applicable limits.

RELATED SUBMITTAL(S) / GRANT(S):

This submittal(s) (test report) is intended for FCC ID: **2BD8F-SW570** filing to comply with Section 15.247 of the FCC Part 15, Subpart C Rules.

2.2. LIST OF TEST AND MEASUREMENT INSTRUMENTS

For conducted emission at the mains terminals test(Shielded Room 2)							
Equipment	Manufacturer	Model No.	Serial No.	Last Cal.	Cal. Interval	Lab No.	Remark
EMI Test Receiver	Rohde & Schwarz	ESCS30	1002.4500	Feb. 15, 2023	1 Year	LEP-E004	☑
Artificial Mains Network	Rohde & Schwarz	ENV216	100873	Feb. 15, 2023	1 Year	LEP-E001	☑
Artificial Mains Network	Schwarzbeck	NSLK 8128	NSLK 8128-249	Feb. 15, 2023	1 Year	LEP-E047	☐
Pulse Limiter	Schwarzbeck	VYSD9561-F-N	00612	Feb. 15, 2023	1 Year	LEP-E047	☐
ISN	Schwarzbeck	ISN-CAT6	NTFM8158	Feb. 15, 2023	1 Year	LEP-E048	☐
RF Switching Unit	CD	RSU-M2	8830008	Feb. 15, 2023	1 Year	LEP-E045	☑
Shielded Room 2	MR	MR-L01	LEP-E050	Nov. 17, 2022	3 Year	LEP-E050	☑
Test software	EZ-EMC	Fala	EMC-CON 3A1.1+	N/A	N/A	N/A	☑
For radiated(9K-30M) emission test(966 Chamber 1)							
Equipment	Manufacturer	Model No.	Serial No.	Last Cal.	Cal. Interval	Lab No.	Remark
EMI Test Receiver	Rohde & Schwarz	ESR 3	101849	Feb. 15, 2023	1 Year	LEP-E006	☑
Active Loop Antenna	Schwarzbeck	FMZB 1519C	00008	Feb. 15, 2023	3 Year	LEP-E068	☑
966 Chamber 1	MR	MR-L02	LEP-E051	Nov. 17, 2022	3 Year	LEP-E051	☑
Test software	EZ-EMC	Fala	EMEC-3A1	N/A	N/A	N/A	☑
For radiated(30M-1G) emission test(966 Chamber 1)							
Equipment	Manufacturer	Model No.	Serial No.	Last Cal.	Cal. Interval	Lab No.	Remark
EMI Test Receiver	Rohde & Schwarz	ESR 3	101849	Feb. 15, 2023	1 Year	LEP-E006	☑
TRILOG Broadband Antenna	Schwarzbeck	VULB 9163	743	Nov. 20, 2022	3 Year	LEP-E005	☑
Signal Amplifier	HP	8447D	1726A01222	Feb. 15, 2023	1 Year	LEP-E007	☑
6dB Attenuator	RswTech	5W 6dB	LEP-E084	Feb. 15, 2023	1 Year	LEP-E084	☑
966 Chamber 1	MR	MR-L02	LEP-E051	Nov. 17, 2022	3 Year	LEP-E051	☑
Test software	EZ-EMC	Fala	EMEC-3A1	N/A	N/A	N/A	☑
For radiated(1-18G) emission test(966 Chamber 1)							
Equipment	Manufacturer	Model No.	Serial No.	Last Cal.	Cal. Interval	Lab No.	Remark
Spectrum analyzer	Rohde & Schwarz	FSV40	101412	Feb. 15, 2023	1 Year	LEP-E076	☑
Spectrum analyzer	Agilent	N9020A	MY49100060	Feb. 15, 2023	1 Year	LEP-E020	☑
Horn antenna	Schwarzbeck	BBHA 9120D	01875	Nov. 20, 2022	3 Year	LEP-E024	☑
Preamplifier	Schwarzbeck	BBN 9718B	00010	Mar. 07, 2020	1 Year	LEP-E025	☑
966 Chamber 1	MR	MR-L02	LEP-E051	Nov. 17, 2022	3 Year	LEP-E051	☑
Test software	EZ-EMC	Fala	EMEC-3A1	N/A	N/A	N/A	☑
For radiated(18-40G) emission test(966 Chamber 1)							
Equipment	Manufacturer	Model No.	Serial No.	Last Cal.	Cal. Interval	Lab No.	Remark
Spectrum analyzer	Rohde & Schwarz	FSV40	101412	Feb. 15, 2023	1 Year	LEP-E076	☑
Horn antenna+Preamplifier	COM-POWER	AH840	10100020	Sep. 05, 2022	3 Year	LEP-E075	☑
966 Chamber 1	MR	MR-L02	LEP-E051	Nov. 17, 2022	3 Year	LEP-E051	☑
Test software	EZ-EMC	Fala	EMEC-3A1	N/A	N/A	N/A	☑
For RF test							
Equipment	Manufacturer	Model No.	Serial No.	Last Cal.	Cal. Interval	Lab No.	Remark
Spectrum analyzer	Rohde & Schwarz	FSV40	101412	Feb. 15, 2023	1 Year	LEP-E076	☑
Spectrum analyzer	Agilent	N9020A	MY49100060	Feb. 15, 2023	1 Year	LEP-E020	☑
Vector source	Agilent	N5182A	MY47420382	Feb. 15, 2023	1 Year	LEP-E021	☑
Analog signal source	Agilent	N5171B	MY51350292	Feb. 15, 2023	1 Year	LEP-E022	☑
All instrument	Rohde & Schwarz	CMW 500	1201.002K50	Feb. 15, 2023	1 Year	LEP-E019	☑
High and low temperature	Math-mart	MT-1202-40	LEP-E041	Feb. 15, 2023	1 Year	LEP-E041	☑

chamber							
control unit	Tonscend	JS0806-2	10165	Feb. 15, 2023	1 Year	LEP-E034	☑
Testing software	Tonscend	JSTS1120-3	Ver 2.6.77.0518	N/A	N/A	N/A	☑

2.3. MEASUREMENT UNCERTAINTY

The following measurement uncertainty levels have been estimated for tests performed on the apparatus:

Parameter	Uncertainty
Radio Frequency	±1x10^-5
Maximum Peak Output Power Test	±1.0%
Conducted Emissions Test	±3.08dB
Radiated Emission Test	±4.60dB
Power Density	±0.9%
Occupied Bandwidth Test	±2.3%
Band Edge Test	±1.2%
Antenna Port Emission	±3dB
Temperature	±3.2%
Humidity	±2.5%
Measurement Uncertainty for a level of Confidence of 95%	

2.4. TEST FACILITY

EMC Lab. : The Laboratory has been assessed and proved to be in compliance with CNAS/CL01
The Certificate Registration Number is L10100.
The Laboratory has been assessed and proved to be in compliance with A2LA
The Certificate Registration Number is 6901.01

FCC Designation No.: CN1351
Test Firm Registration No.: 397428

ISED CAB identifier: CN0151
Test Firm Registration No.: 20133

Test Location : Dongguan Lepont Testing Service Co., Ltd.

Address : Room 102, Building 11, No.7, Houjie Science And Technology Avenue, Houjie, Dongguan, Guangdong, China

3. SETUP OF EQUIPMENT UNDER TEST

3.1. RADIO FREQUENCY TEST SETUP 1

The component's antenna ports(s) of the EUT are connected to the measurement instrument per an appropriate attenuator. The EUT is controlled by PC/software to emit the specified signals for the purpose of measurements.

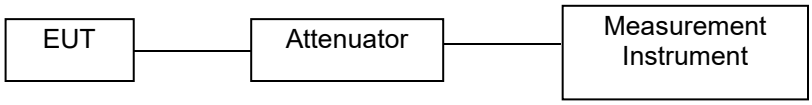

3.2. RADIO FREQUENCY TEST SETUP 2

The test site semi-anechoic chamber has met the requirement of NSA tolerance 4 dB according to the standards: ANSI C63.10. The test distance is 3m.The setup is according to the requirements in Section 13.1.4.1 of ANSI C63.10-2013 and CAN/CSA-CEI/IEC CISPR 32.

Below 30MHz：
The EUT is placed on a turntable 0.8meters above the ground in the chamber, 3 meter away from the antenna (loop antenna). The Antenna should be positioned with its plane vertical at the specified distance from the EUT and rotated about its vertical axis for maximum response at each azimuth about the EUT. The center of the loop shall be 1 m above the ground. For certain applications, the loop antenna plane may also need to be positioned horizontally at the specified distance from the EUT.

Above 30MHz：
The EUT is placed on a turntable 0.8meters above the ground in the chamber, 3 meter away from the antenna. The maximal emission value is acquired by adjusting the antenna height, polarisation and turntable azimuth. Normally, the height range of antenna is 1 m to 4 m, the azimuth range of turntable is 0° to 360°, and the receive antenna has two polarizations Vertical (V) and Horizontal (H).

Above 1GHz:
(Note: the FCC's permission to use 1.5m as an alternative per TCBC Conf call of Dec. 2, 2014.)
The EUT is placed on a turntable 1.5 meters above the ground in the chamber, 3 meter away from the antenna. The maximal emission value is acquired by adjusting the antenna height, polarisation and turntable azimuth. Normally, the height range of antenna is 1 m to 4 m, the azimuth range of turntable is 0° to 360°, and the receive antenna has two polarizations Vertical (V) and Horizontal (H).

(a) Radiated Emission Test Set-Up, Frequency Below 30MHz

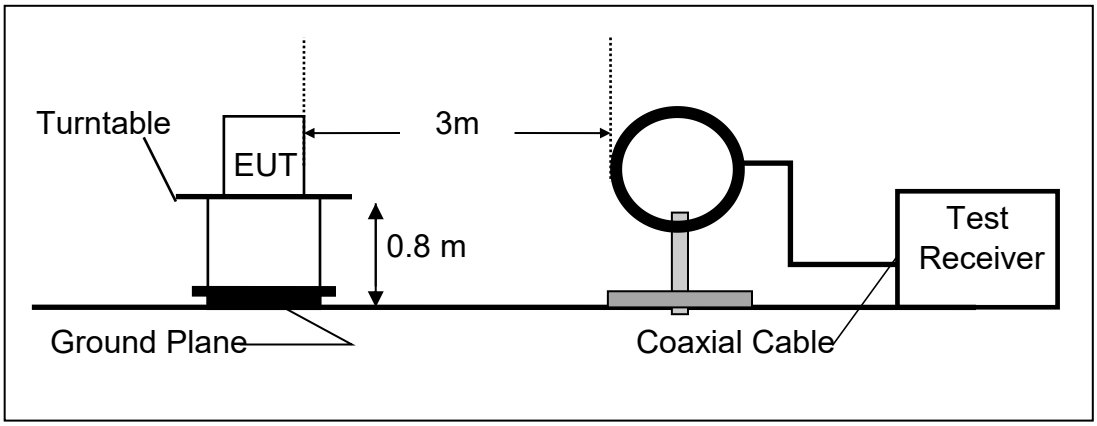

(b) Radiated Emission Test Set-Up, Frequency Below 1000MHz

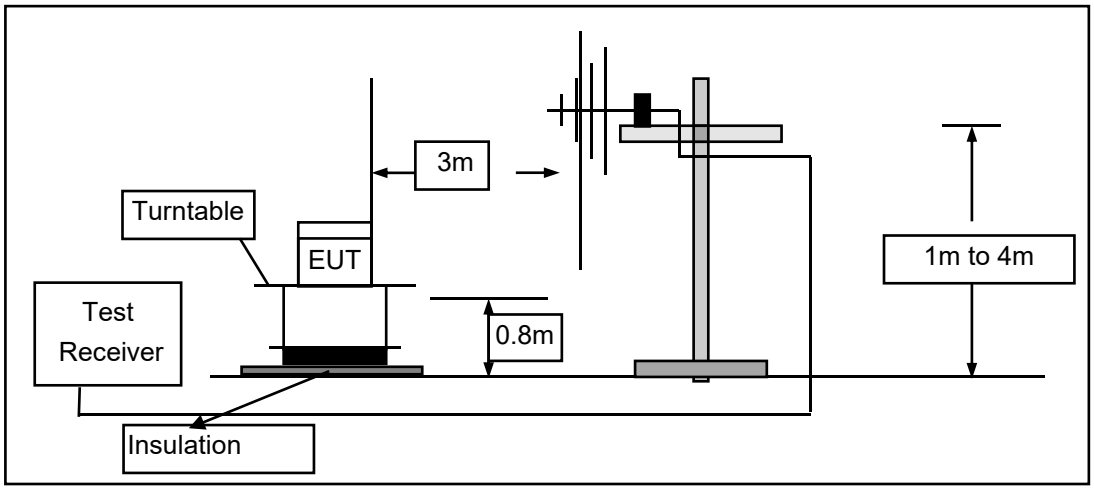

(c) Radiated Emission Test Set-Up, Frequency above 1000MHz

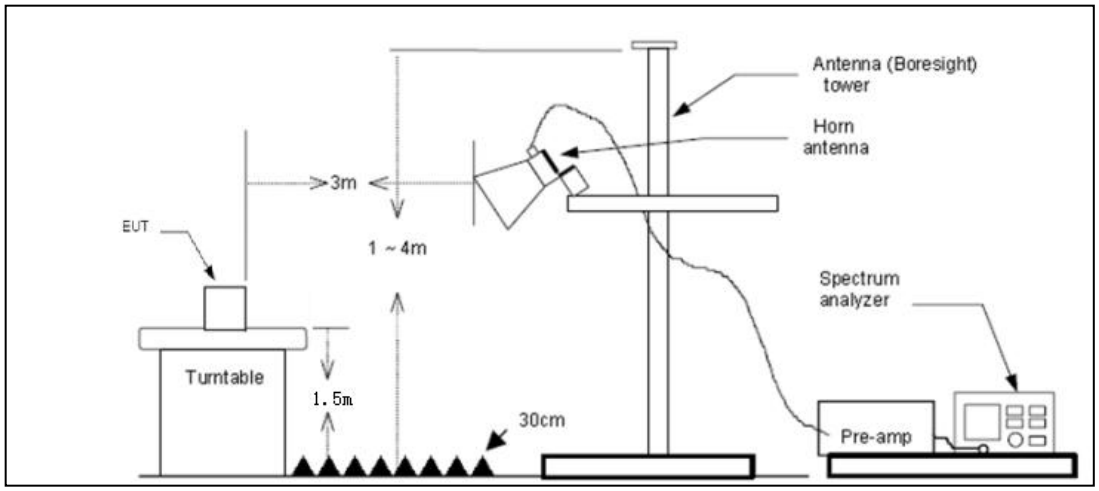

3.3. CONDUCTED EMISSION TEST SETUP

The mains cable of the EUT (Perfect Share Mini) must be connected to LISN. The LISN shall be placed 0.8m from the boundary of EUT and bonded to a ground reference plane for LISN mounted on top of the ground reference plane. This distance is between the closest points of the LISN and the EUT. All other units of the EUT and associated equipment shall be at least 0.8m from the LISN.
Ground connections, where required for safety purposes, shall be connected to the reference ground point of the LISN and, where not otherwise provided or specified by the manufacturer, shall be of same length as the mains cable and run parallel to the mains connection at a separation distance of not more than 0.8m.
According to the requirements in Section 13.1.4.1 of ANSI C63.10-2013 Conducted emissions from the EUT measured in the frequency range between 0.15 MHz and 30 MHz using CISPR Quasi-Peak and average detector mode.

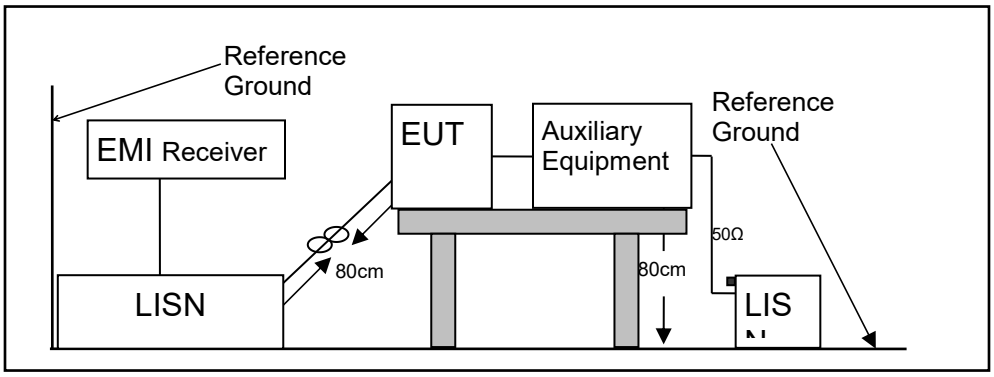

3.4. BLOCK DIAGRAM CONFIGURATION OF TEST SYSTEM

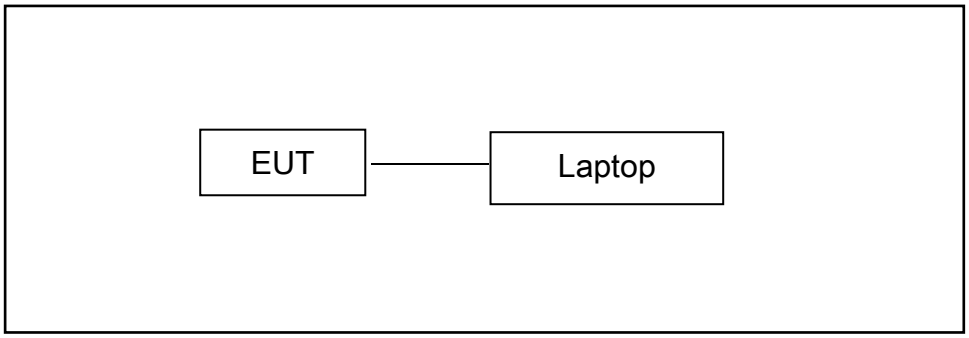

3.5. SUPPORT EQUIPMENT

EUT Cable List and Details			
Cable Description	Length (m)	Shielded/Unshielded	With / Without Ferrite

Auxiliary Cable List and Details			
Cable Description	Length (m)	Shielded/Unshielded	With / Without Ferrite

Auxiliary Equipment List and Details				
Description	Manufacturer	Model	Serial Number	IP/OP
Laptop computer	Lenovo	Xiaoxin Pro IA5HR	PF490VB0	/
ADAPTER	Jiangsu Chenyang Electron Co., Ltd	MDY-08-EO	/	IP:100-240VAC,0.35A OP:5VDC, 2A

Notes:

1. All the equipment/cables were placed in the worst-case configuration to maximize the emission during the test.

2.Grounding was established in accordance with the manufacturer's requirements and conditions for the intended use.

4. TEST RESULTS AND MEASUREMENT DATA

4.1. 20DB BANDWIDTH

4.1.1. Applicable Standard

According to FCC Part 15.247(a)(1) and KDB 558074 D01 15.247 Meas Guidance v05r02

4.1.2. Conformance Limit

No limit requirement.

4.1.3. Test Configuration

Test according to clause 3.1 radio frequency test setup 1

4.1.4. Test Procedure

The EUT was operating in Bluetooth mode and controlled its channel. Printed out the test result from the spectrum by hard copy function.
The RF output of EUT was connected to the spectrum analyzer by RF cable and attenuator. The path loss was compensated to the results for each measurement.
Set to the maximum power setting and enable the EUT transmit continuously
Set RBW = 30 kHz.
Set the video bandwidth (VBW) =100 kHz.
Set Span= approximately 2 to 3 times the 20 dB bandwidth
Set Detector = Peak.
Set Trace mode = max hold.
Set Sweep = auto couple.
The EUT should be transmitting at its maximum data rate. Allow the trace to stabilize. Use the marker-to-peak function to set the marker to the peak of the emission. Use the marker-delta function to measure 20 dB down one side of the emission. Reset the marker delta function, and move the marker to the other side of the emission, until it is (as close as possible to) even with the reference marker level. The marker-delta reading at this point is the 20 dB bandwidth of the emission.
If this value varies with different modes of operation (e.g., data rate, modulation format, etc.), repeat this test for each variation.
Measure and record the results in the test report.

Test Results:

Modulation Mode	Channel Number	Channel Frequency (MHz)	Measurement Bandwidth(MHz)	Limit (MHz)	Verdict
GFSK	0	2402	1.037	N/A	PASS
	39	2441	1.039	N/A	PASS
	78	2480	1.046	N/A	PASS
π/4-DQPSK	0	2402	1.323	N/A	PASS
	39	2441	1.331	N/A	PASS
	78	2480	1.335	N/A	PASS
8DPSK	0	2402	1.298	N/A	PASS
	39	2441	1.293	N/A	PASS
	78	2480	1.291	N/A	PASS
Note: N/A (Not Applicable)					

Test Model	20dB Bandwidth	
	GFSK	
	Channel 0	2402MHz

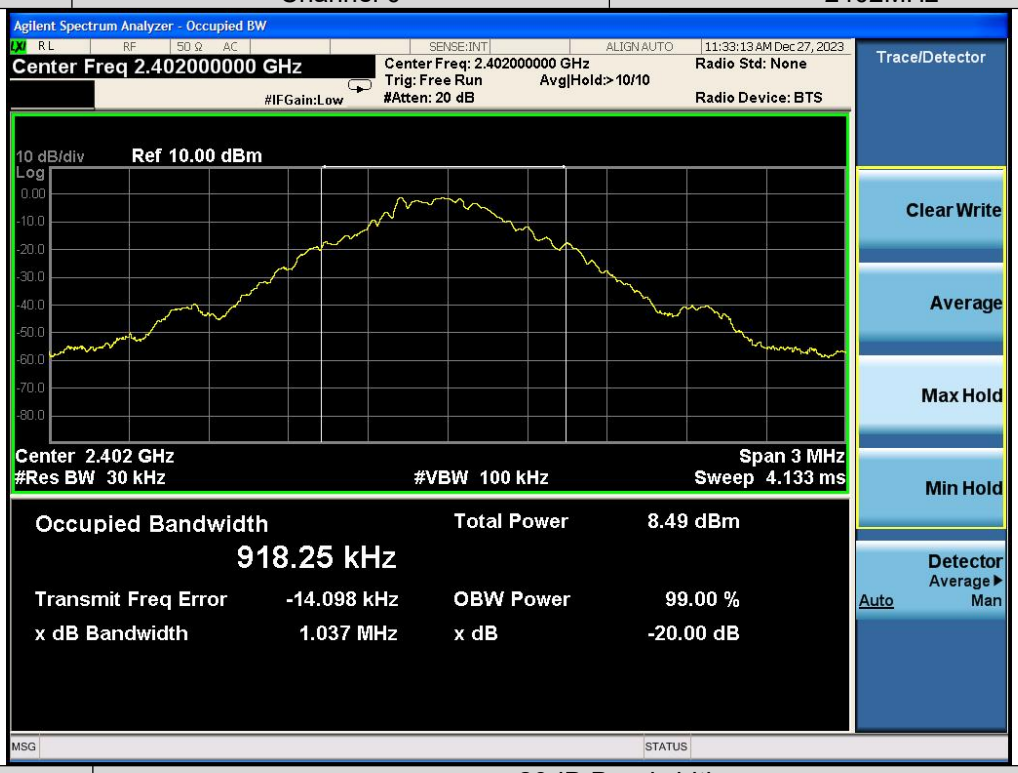

Test Model	20dB Bandwidth	
	GFSK	
	Channel 39	2441MHz

Test Model	20dB Bandwidth	
	GFSK	
	Channel 78	2480MHz

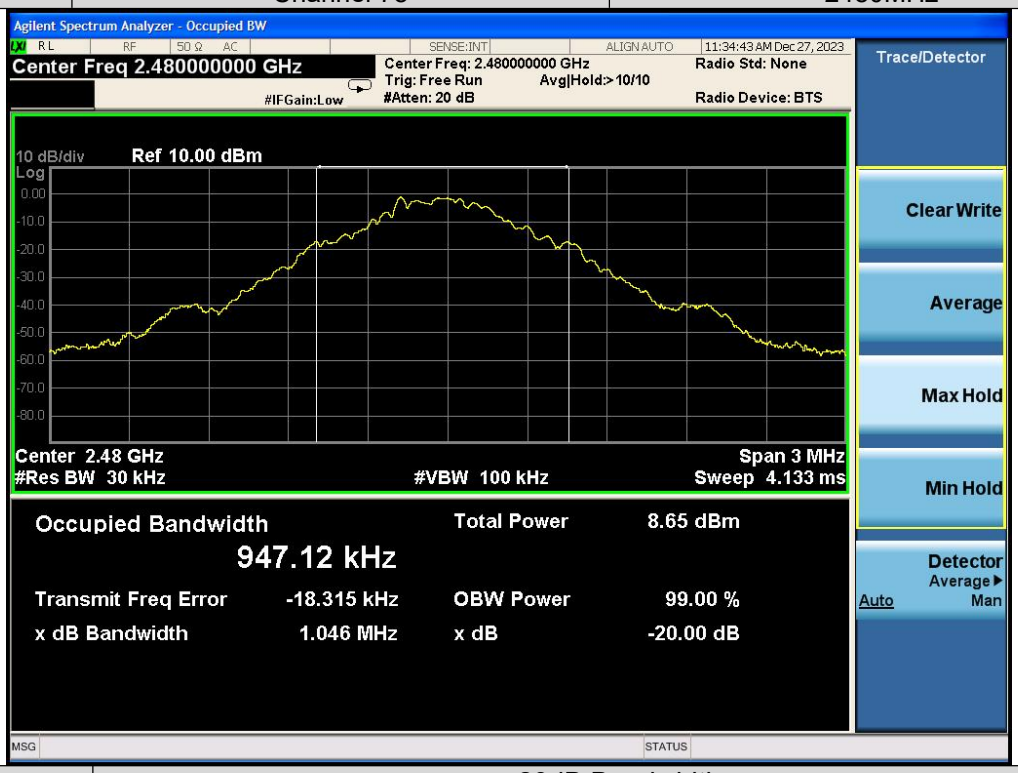

Test Model	20dB Bandwidth	
	π/4-DQPSK	
	Channel 0	2402MHz

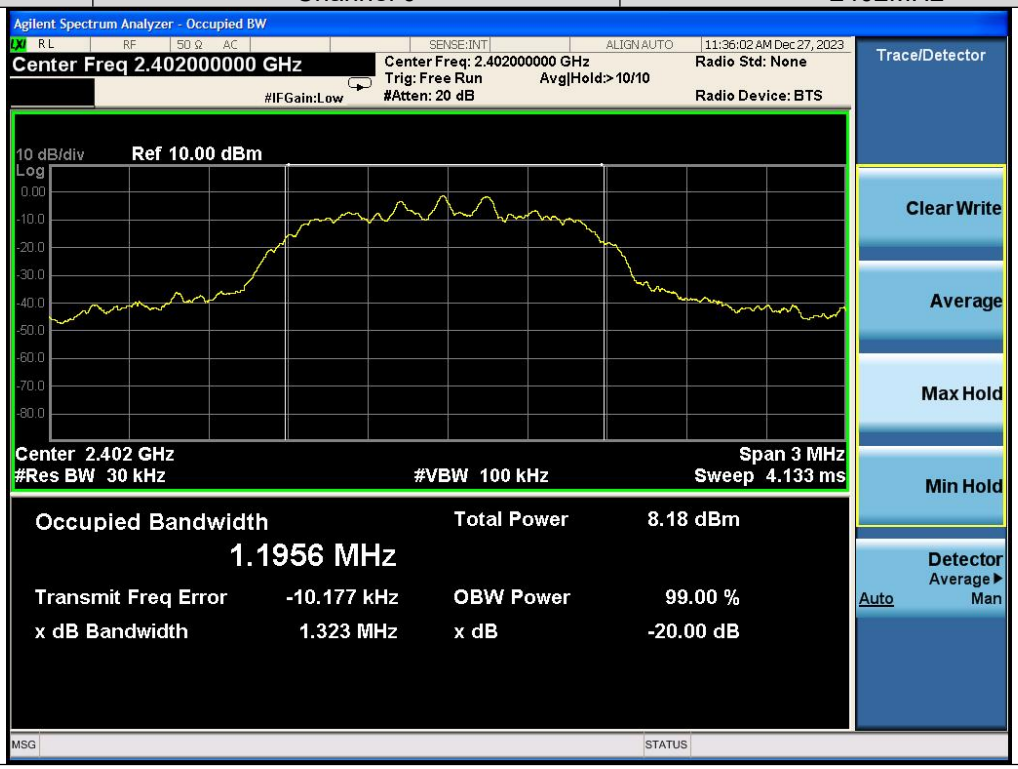

Test Model	20dB Bandwidth	
	π/4-DQPSK	
	Channel 39	2441MHz

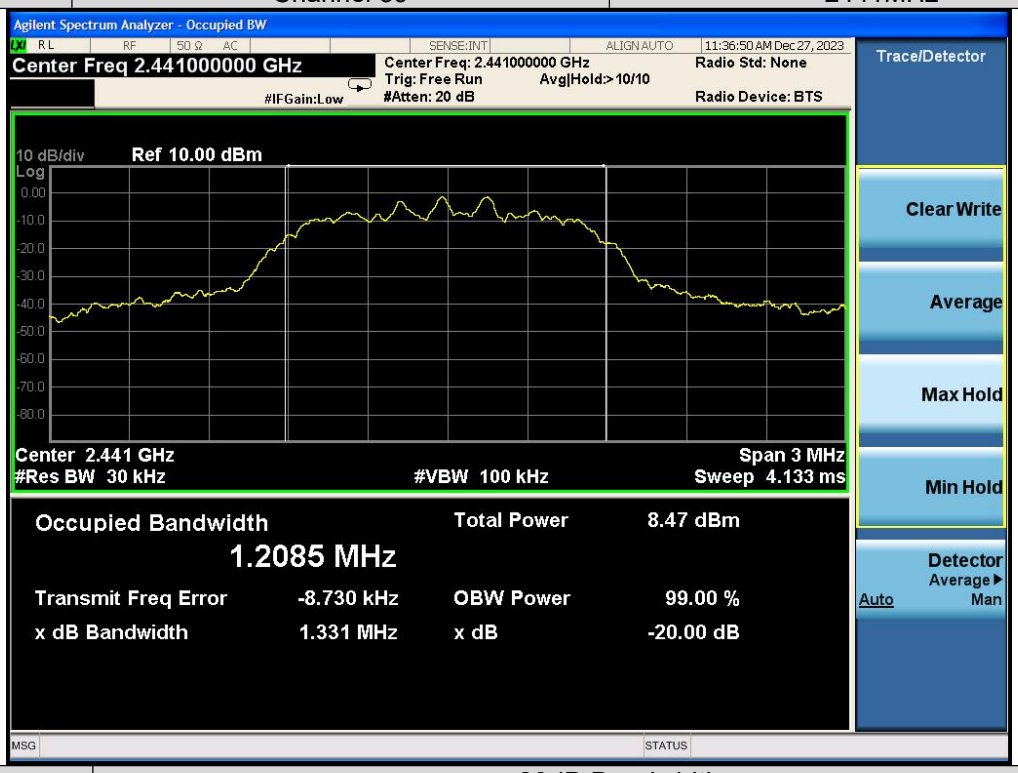

Test Model	20dB Bandwidth	
	π/4-DQPSK	
	Channel 78	2480MHz

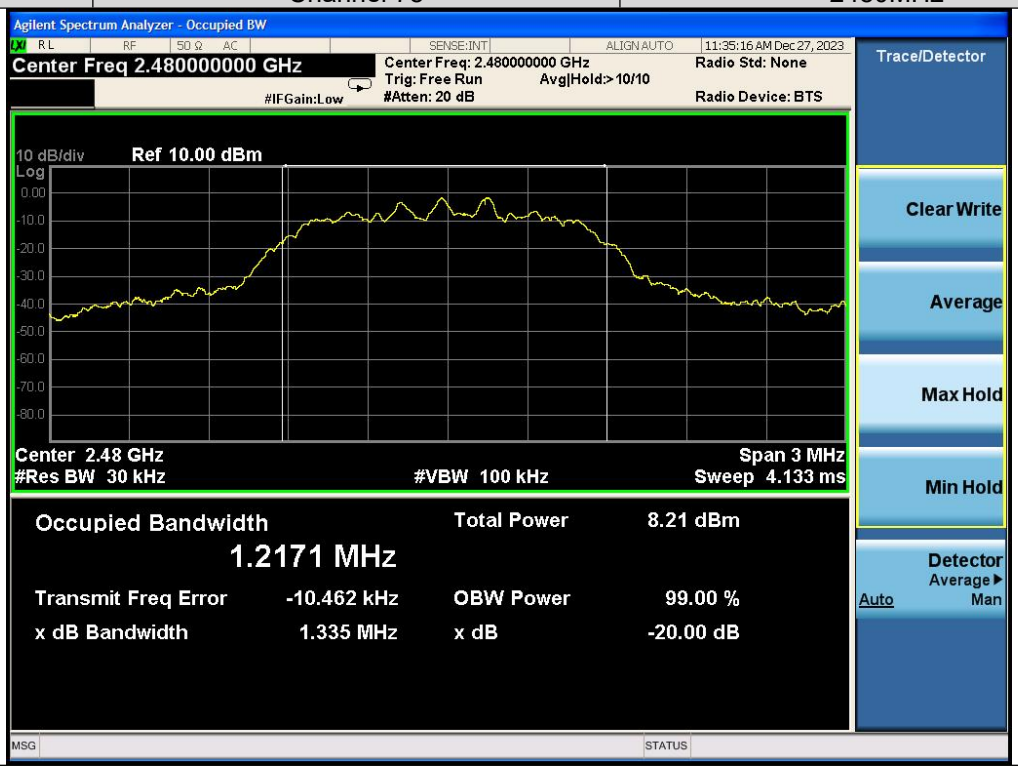

Test Model	20dB Bandwidth	
	8DPSK	
	Channel 0	2402MHz

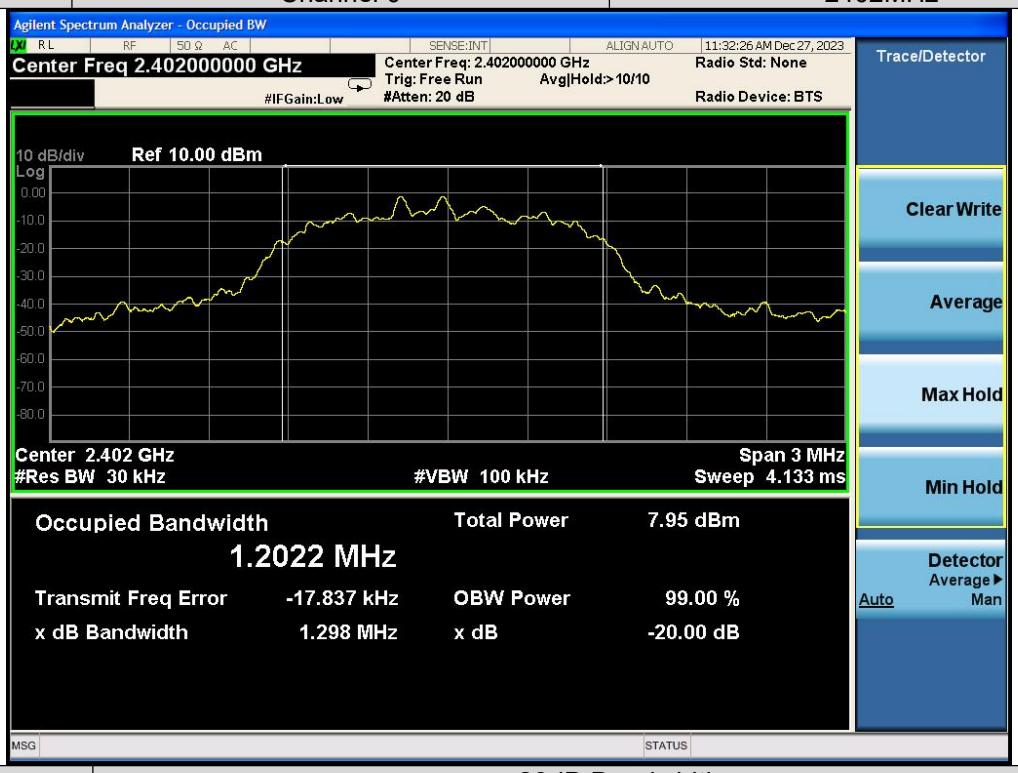

Test Model	20dB Bandwidth	
	8DPSK	
	Channel 39	2441MHz

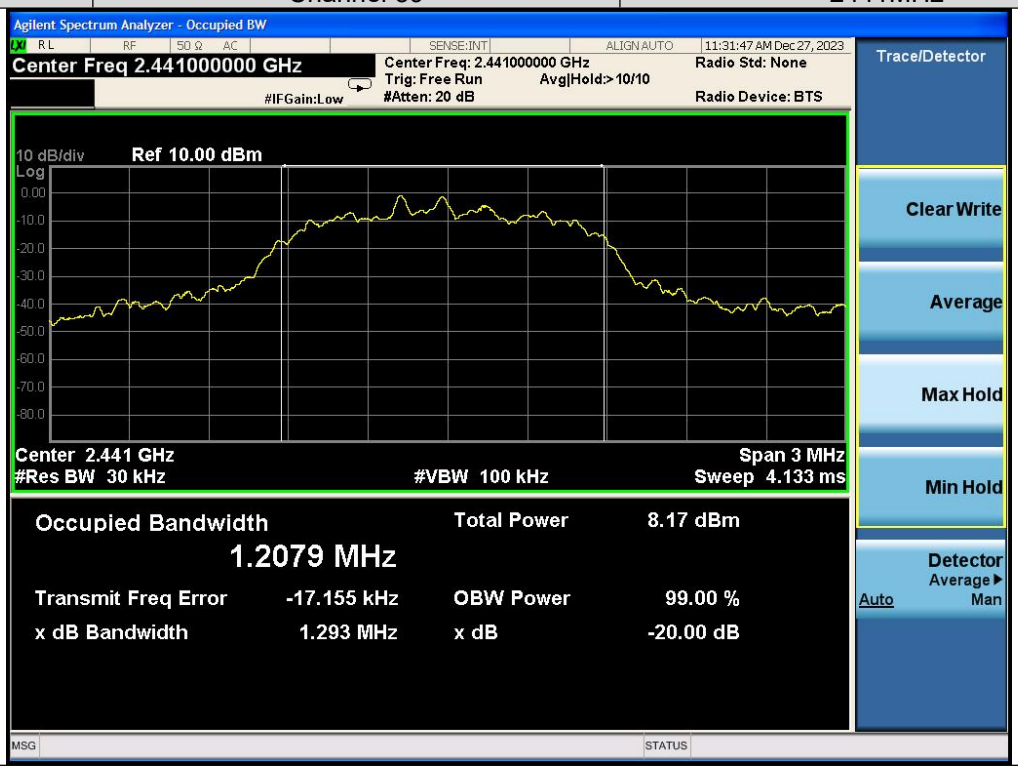

Test Model	20dB Bandwidth	
	8DPSK	
	Channel 78	2480MHz

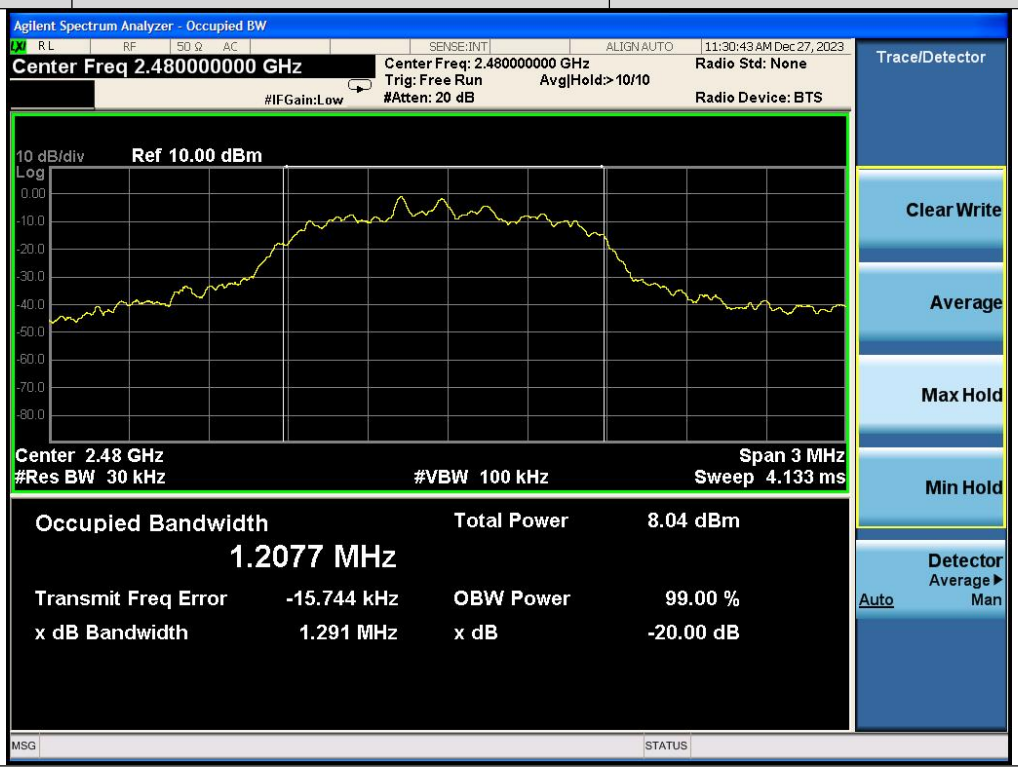

4.2. CARRIER FREQUENCY SEPARATION

4.2.1. Applicable Standard

According to FCC Part 15.247(a)(1) and KDB 558074 D01 15.247 Meas Guidance v05r02

4.2.2. Conformance Limit

Frequency hopping systems shall have hopping channel carrier frequencies separated by a minimum of 25 kHz or the 20 dB bandwidth of the hopping channel, whichever is greater.

Alternatively, frequency hopping systems operating in the 2400 – 2483.5 MHz band may have hopping channel carrier frequencies that are separated by 25 kHz or two-thirds of the 20 dB bandwidth of the hopping channel, whichever is greater, provided the systems operate with an output power no greater than 125 mW.

4.2.3. Test Configuration

Test according to clause 3.1 radio frequency test setup 1

4.2.4. Test Procedure

■ According to FCC Part15.247(a)(1)

The EUT must have its hopping function enabled. Use the following spectrum analyzer settings:
Set the RBW =30kHz.
Set VBW =100kHz.
Set the span = wide enough to capture the peaks of two adjacent channels
Set Sweep time = auto couple.
Set Detector = peak. Set Trace mode = max hold.
Allow the trace to stabilize. Use the marker-delta function to determine the separation between the peaks of the adjacent channels. The limit is specified in one of the subparagraphs of this Section. Submit this plot.

Test Results：

Modulation Mode	Channel Number	Channel Frequency (MHz)	Measurement Bandwidth(kHz)	Limit(kHz)	Verdict
GFSK	0	2402	837	>691	PASS
	39	2441	1038	>693	PASS
	78	2480	975	>697	PASS
π/4-DQPSK	0	2402	1011	>882	PASS
	39	2441	1176	>887	PASS
	78	2480	1002	>890	PASS
8DPSK	0	2402	1140	>865	PASS
	39	2441	1002	>862	PASS
	78	2480	1152	>861	PASS
Note: Limit = 20dB bandwidth * 2/3					

Test Model	Carrier Frequency Separation	
	GFSK	
	Channel 0	2402MHz

Test Model	Carrier Frequency Separation	
	GFSK	
	Channel 39	2441MHz

Test Model	Carrier Frequency Separation	
	GFSK	
	Channel:78	2480MHz

Test Model	Carrier Frequency Separation	
	π/4-DQPSK	
	Channel:0	2402MHz

Test Model	Carrier Frequency Separation	
	π/4-DQPSK	
	Channel 39	2441MHz

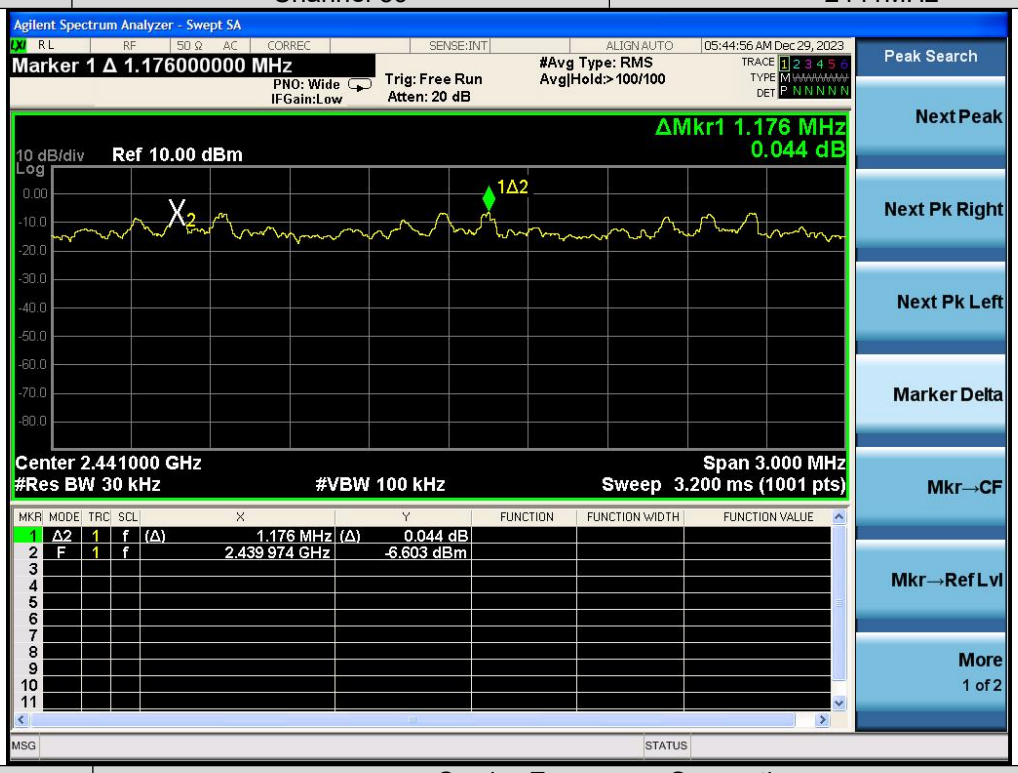

Test Model	Carrier Frequency Separation	
	π/4-DQPSK	
	Channel 78	2480MHz

Test Model	Carrier Frequency Separation	
	8DPSK	
	Channel 0	2402MHz

Test Model	Carrier Frequency Separation	
	8DPSK	
	Channel 39	2441MHz

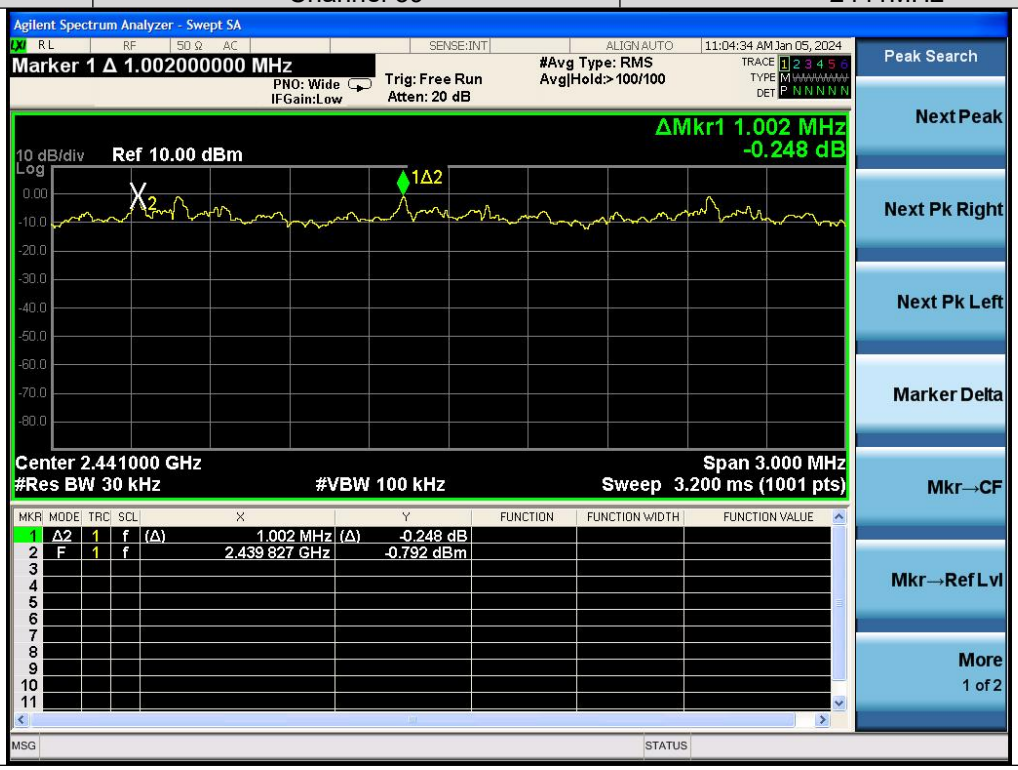

Test Model	Carrier Frequency Separation	
	8DPSK	
	Channel 78	2480MHz

4.3. NUMBER OF HOPPING FREQUENCIES

4.3.1. Applicable Standard

According to FCC Part 15.247(a)(1) and KDB 558074 D01 15.247 Meas Guidance v05r02

4.3.2. Conformance Limit

Frequency hopping systems operating in the 2400-2483.5MHz band shall use at least 15 channels.

4.3.3. Test Configuration

Test according to clause 3.1 radio frequency test setup 1

4.3.4. Test Procedure

■ According to FCC Part15.247(a)(1)(iii)

The EUT must have its hopping function enabled. Use the following spectrum analyzer settings:
Span = the frequency band of operation (2400-2483.5MHz)
RBW ≥ 100KHz
VBW ≥ RBW
Sweep = auto
Detector function = peak
Trace = max hold
Allow the trace to stabilize. It may prove necessary to break the span up to sections, in order to clearly show all of the hopping frequencies.

Test Results：

Modulation Mode	Hopping Channel Frequency Range	Quantity of Hopping Channel	Quantity of Hopping Channel limit
GFSK	2402-2480	79	＞15
π/4-DQPSK	2402-2480	79	＞15
8DPSK	2402-2480	79	＞15

Test Model	Number Of Hopping Frequencies	
	GFSK	
	Fre: 2400-2483.5	

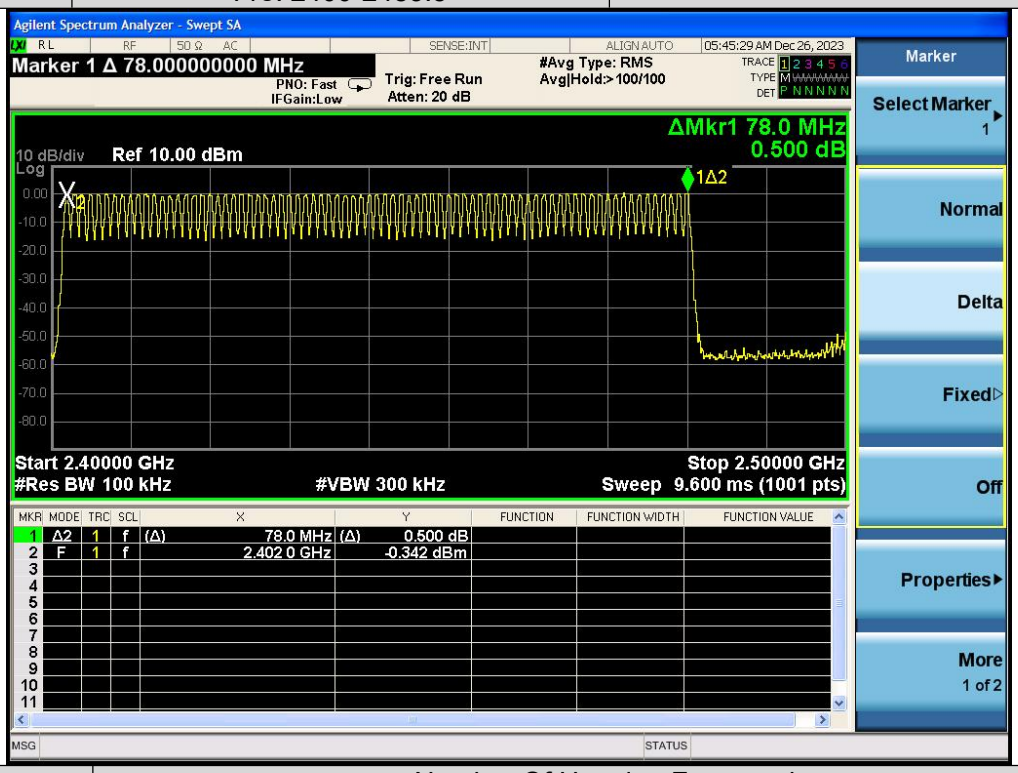

Test Model	Number Of Hopping Frequencies	
	π/4-DQPSK	
	Fre: 2400-2483.5	

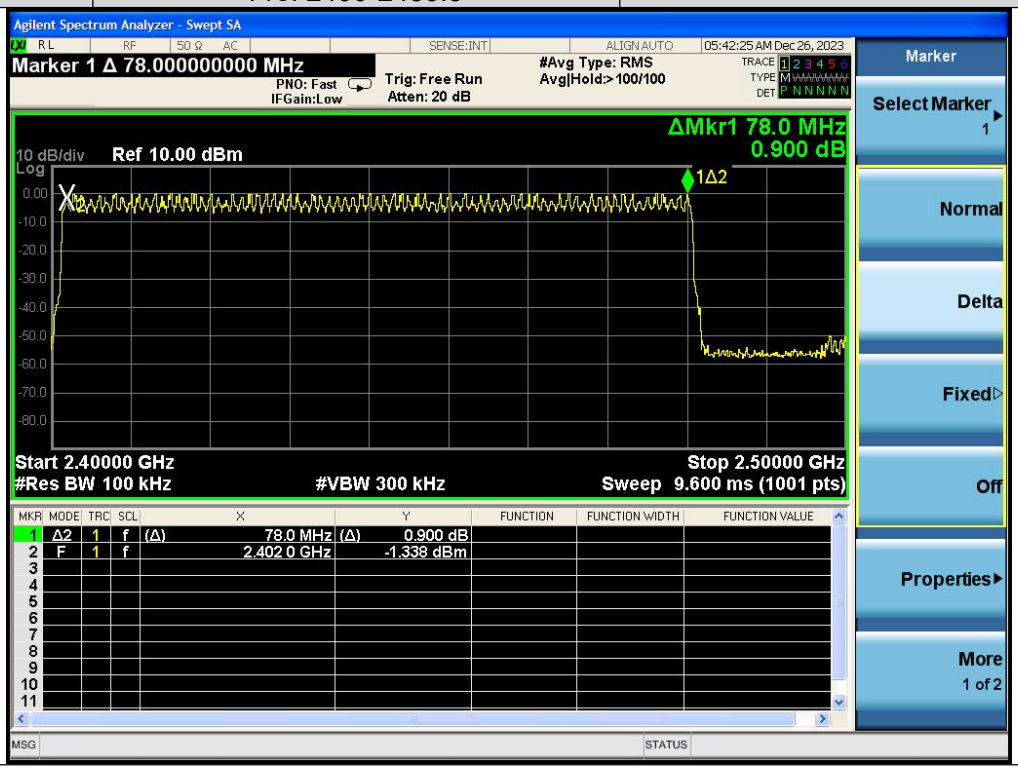

Test Model	Number Of Hopping Frequencies	
	8DPSK	
	Fre: 2400-2483.5	

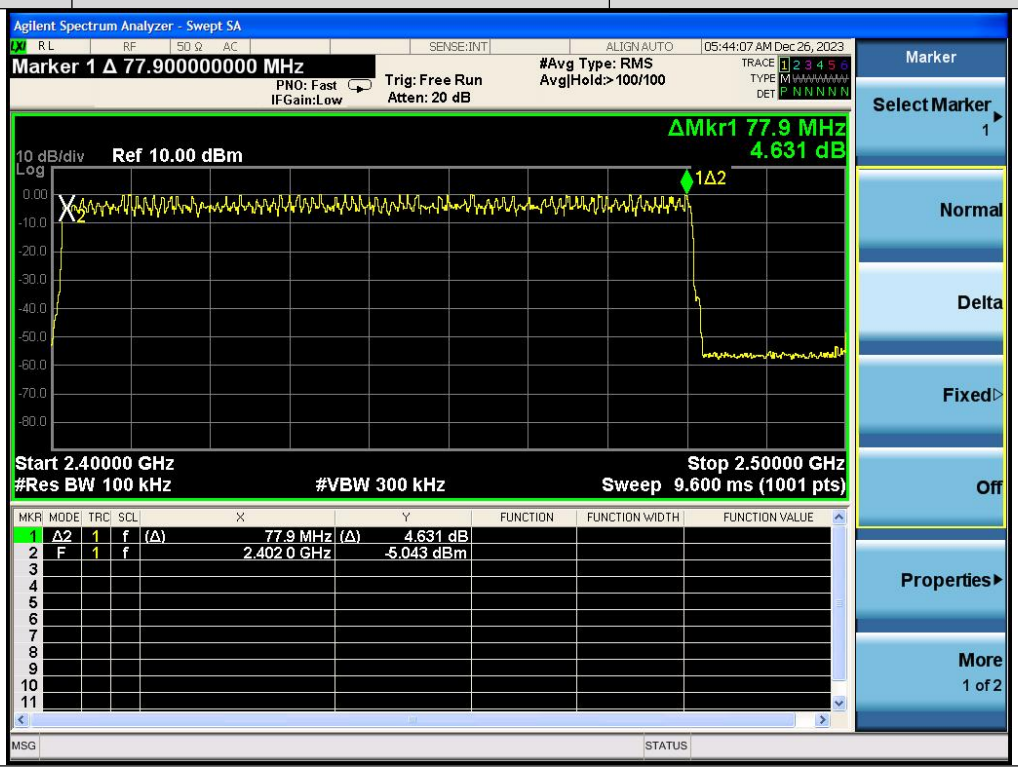

4.4. AVERAGE TIME OF OCCUPANCY (DWELL TIME)

4.4.1. Applicable Standard

According to FCC Part 15.247(a)(1) and KDB 558074 D01 15.247 Meas Guidance v05r02

4.4.2. Conformance Limit

For frequency hopping systems operating in the 2400-2483.5MHz band, the average time of occupancy on any channel shall not be greater than 0.4s within a period of 0.4s multiplied by the number of hopping channels employed.

4.4.3. Test Configuration

Test according to clause 3.1 radio frequency test setup 1

4.4.4. Test Procedure

■ According to FCC Part15.247(a)(1)(iii)

The EUT must have its hopping function enabled. Use the following spectrum analyzer settings:
Span = zero span, centered on a hopping channel
RBW = 1 MHz
VBW ≥ RBW
Sweep = as necessary to capture the entire dwell time per hopping channel
Detector function = peak
Trace = max hold
If possible, use the marker-delta function to determine the dwell time. If this value varies with different modes of operation (e.g., data rate, modulation format, etc.), repeat this test for each variation. The limit is specified in one of the subparagraphs of this Section.

Test Results：

Bluetooth (GFSK, π/4-DQPSK, 8DPSK) mode have been tested, and the worst result was report as below:

Modulation Mode	Channel Number	Packet type	Pluse width (ms)	Dwell Time (ms)	Limit (ms)	Verdict
GFSK	0	DH1	0.375	120.0	<400	PASS
	0	DH3	1.63	260.8	<400	PASS
	0	DH5	2.88	307.2	<400	PASS
π/4-DQPSK	0	2DH1	0.385	123.2	<400	PASS
	0	2DH3	1.64	262.4	<400	PASS
	0	2DH5	2.86	305.1	<400	PASS
8DPSK	0	3DH1	0.385	123.2	<400	PASS
	0	3DH3	1.63	260.8	<400	PASS
	0	3DH5	2.88	307.2	<400	PASS

Note:
Dwell Time(DH1)=PW*(1600/2/79)*31.6
Dwell Time(DH3)=PW*(1600/4/79)*31.6
Dwell Time(DH5)=PW*(1600/6/79)*31.6
Dwell Time(2DH1)=PW*(1600/2/79)*31.6
Dwell Time(2DH3)=PW*(1600/4/79)*31.6
Dwell Time(2DH5)=PW*(1600/6/79)*31.6
Dwell Time(3DH1)=PW*(1600/2/79)*31.6
Dwell Time(3DH3)=PW*(1600/4/79)*31.6
Dwell Time(3DH5)=PW*(1600/6/79)*31.6

Test Model	Average Time Of Occupancy (Dwell Time)	
	GFSK(DH1)	
	Channel: 0	2402MHz

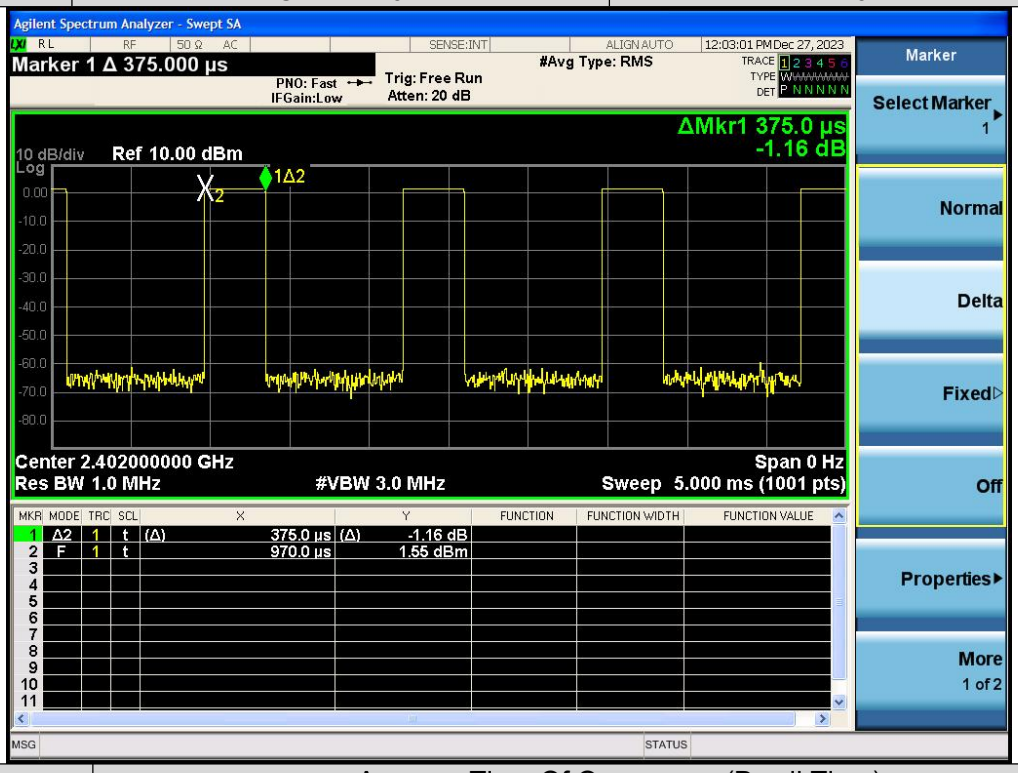

Test Model	Average Time Of Occupancy (Dwell Time)	
	GFSK(DH3)	
	Channel: 0	2402MHz

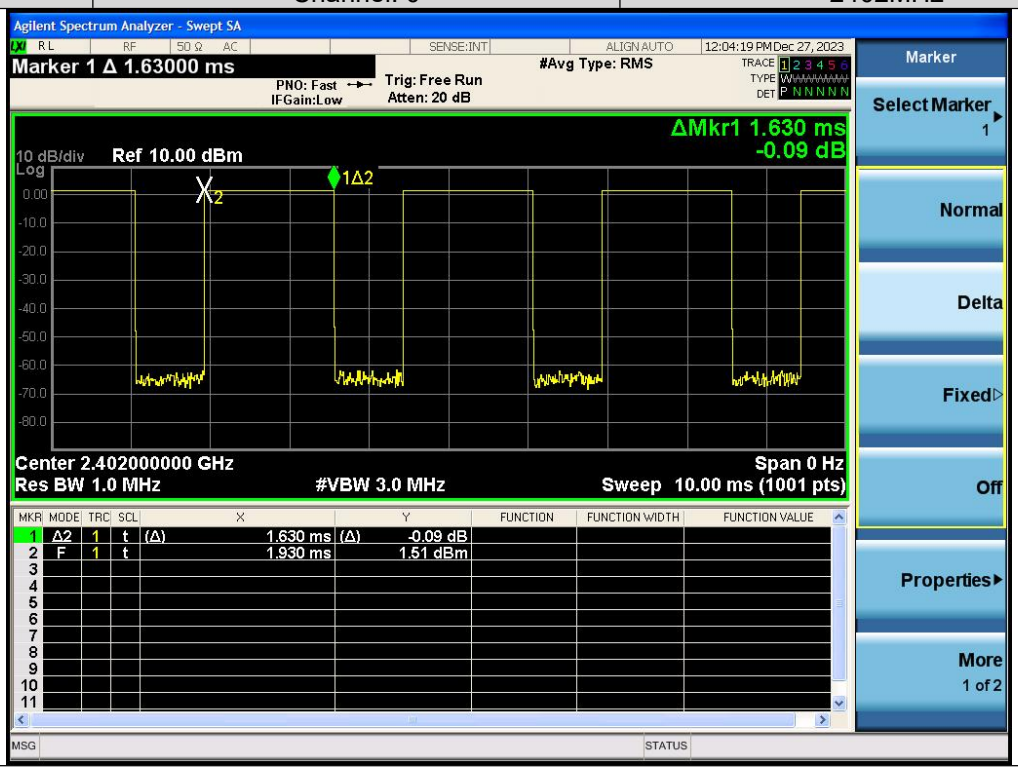

Test Model	Average Time Of Occupancy (Dwell Time)	
	GFSK(DH5)	
	Channel: 0	2402MHz

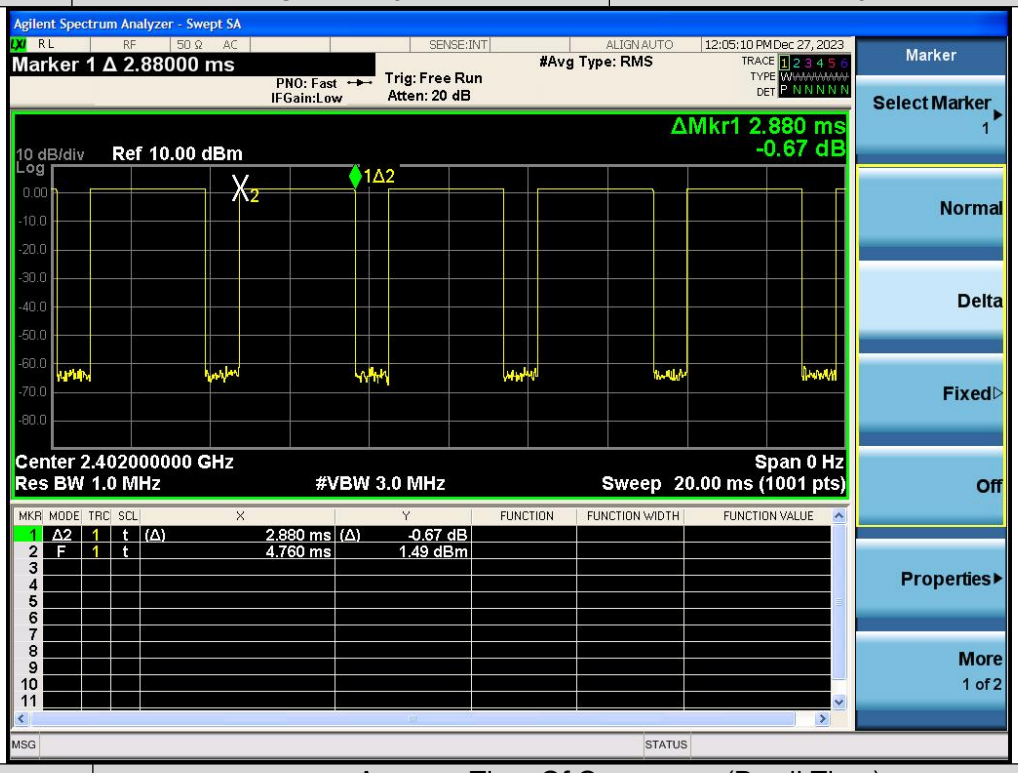

Test Model	Average Time Of Occupancy (Dwell Time)	
	π/4-DQPSK(2DH1)	
	Channel: 0	2402MHz

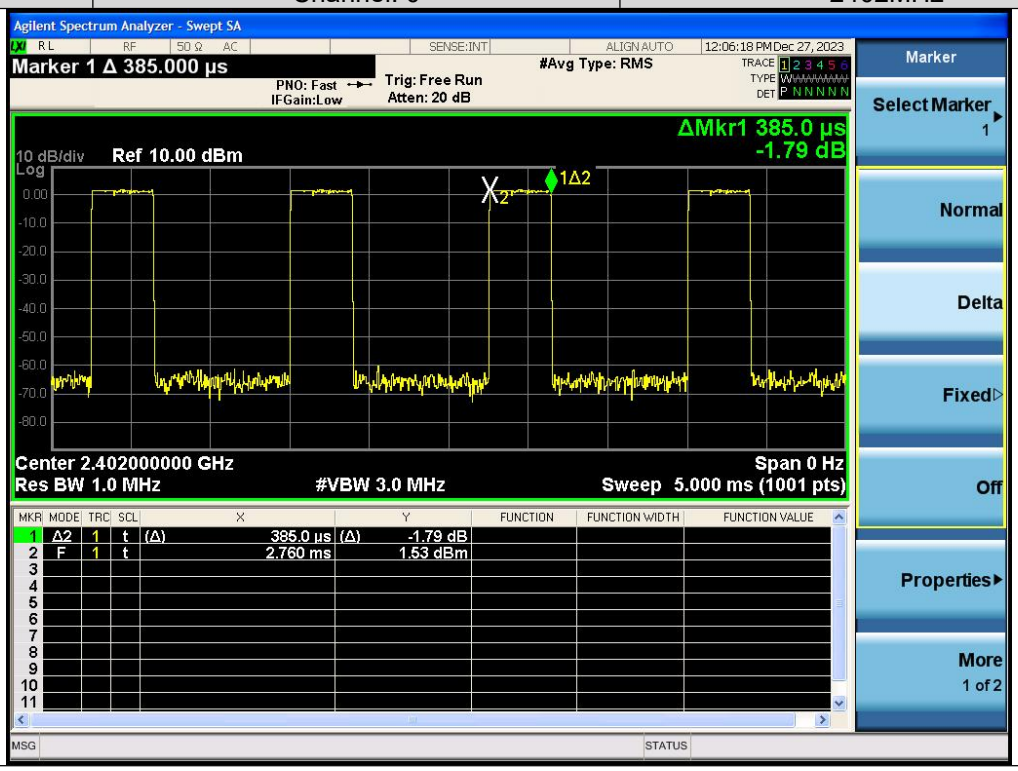

Test Model	Average Time Of Occupancy (Dwell Time)	
	π/4-DQPSK(2DH3)	
	Channel: 0	2402MHz

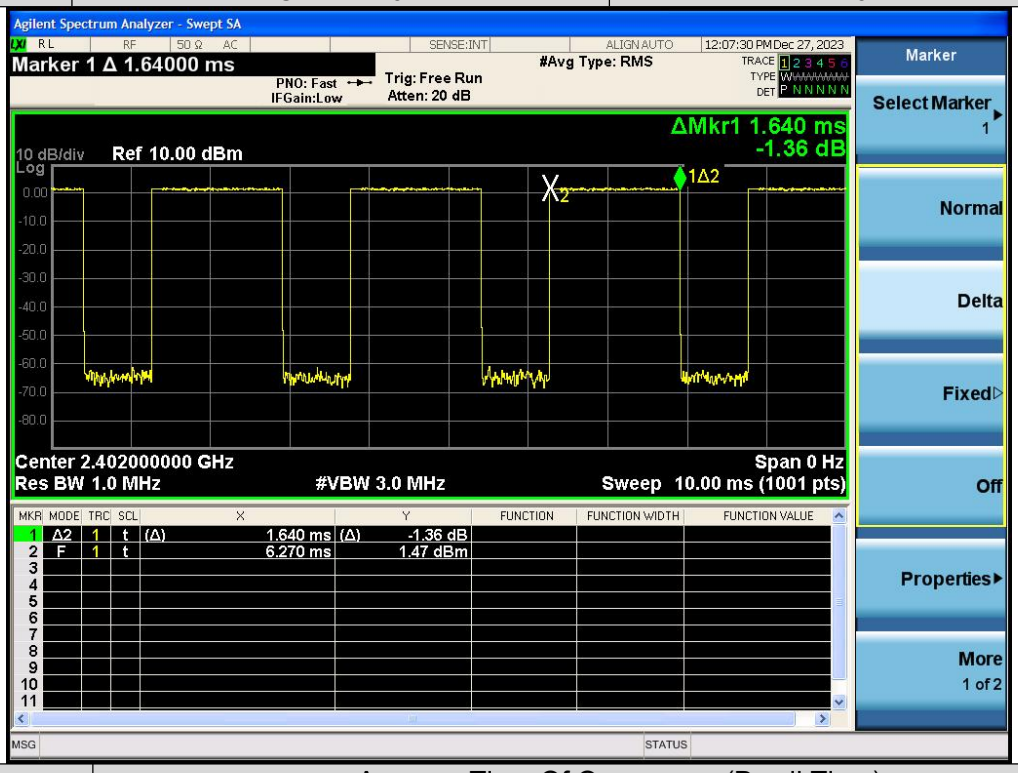

Test Model	Average Time Of Occupancy (Dwell Time)	
	π/4-DQPSK(2DH5)	
	Channel: 0	2402MHz

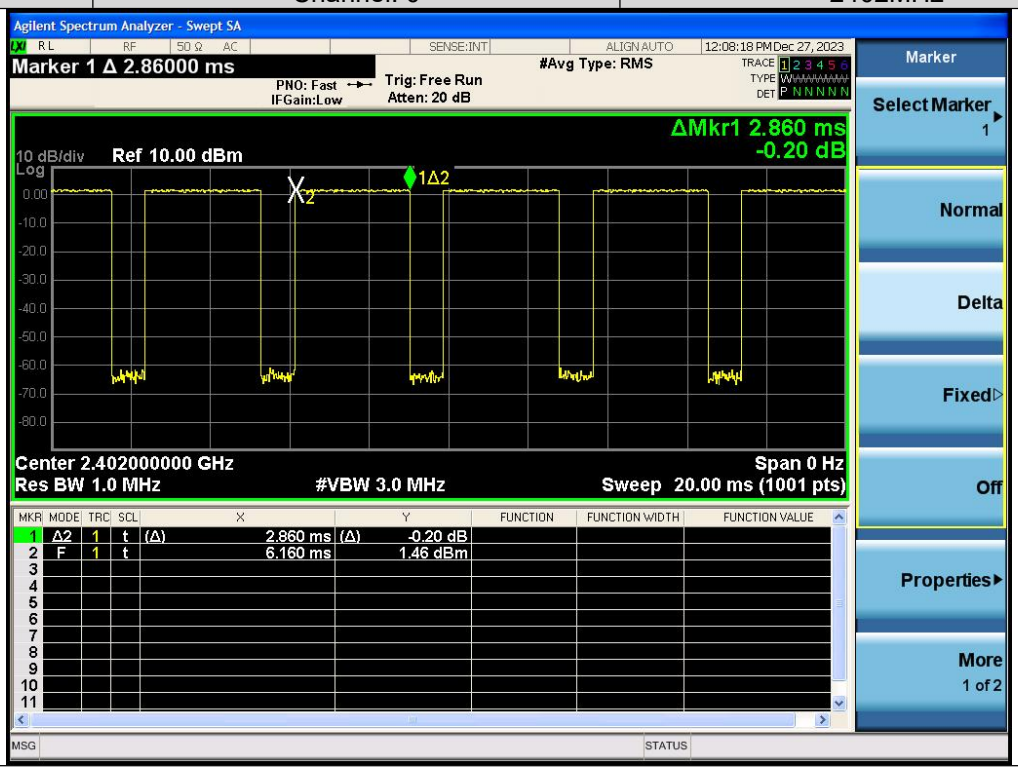

Test Model	Average Time Of Occupancy (Dwell Time)	
	8DPSK(3DH1)	
	Channel: 0	2402MHz

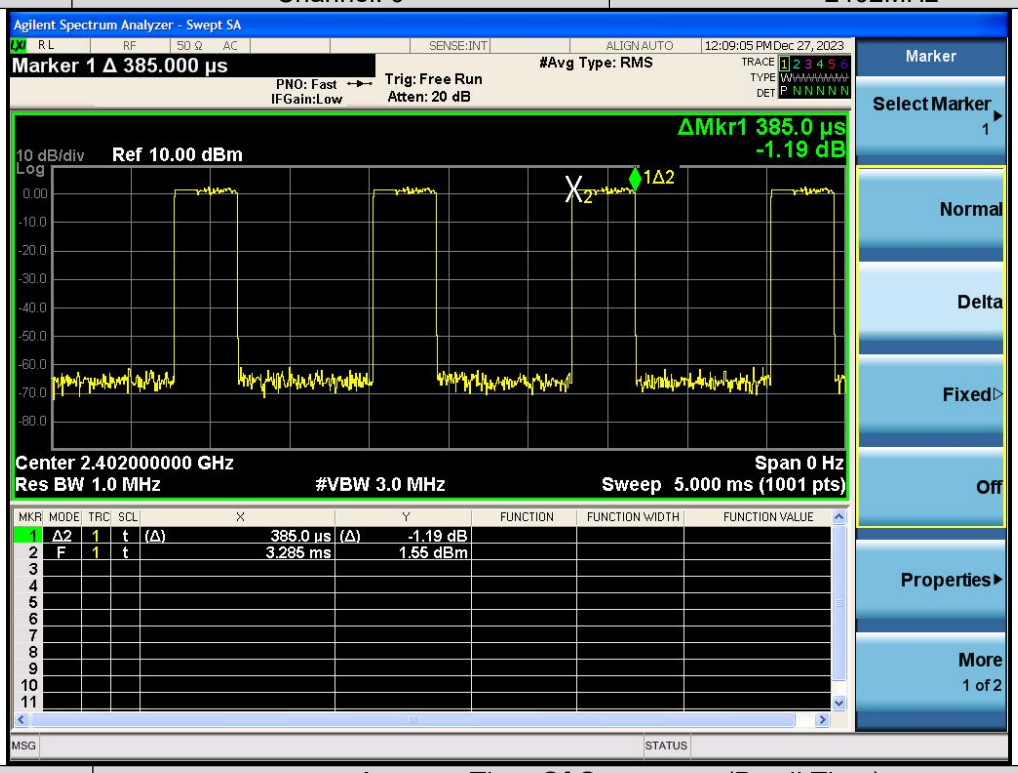

Test Model	Average Time Of Occupancy (Dwell Time)	
	8DPSK(3DH3)	
	Channel: 0	2402MHz

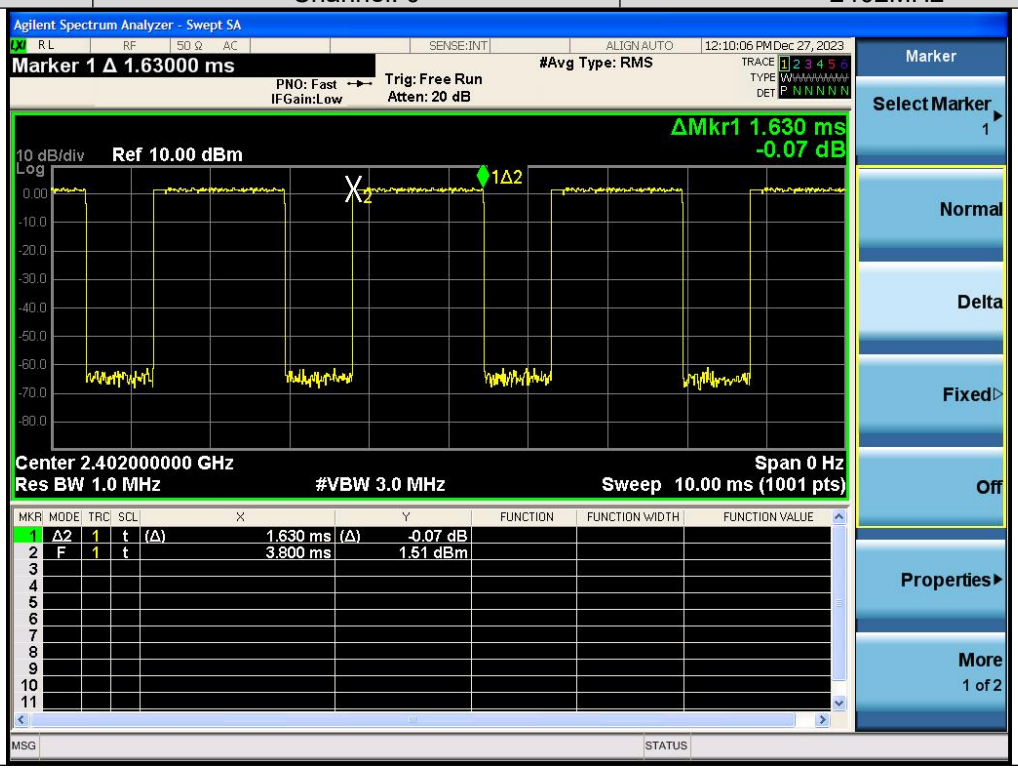
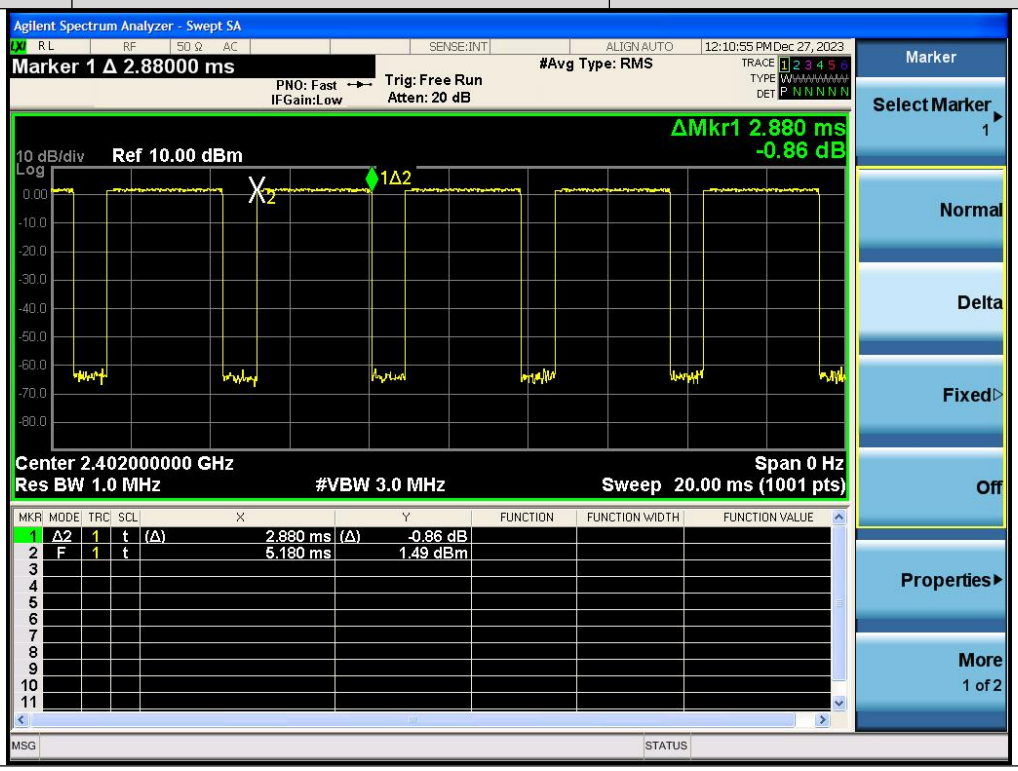
Test Model	Average Time Of Occupancy (Dwell Time)	
	8DPSK(3DH5)	
	Channel: 0	2402MHz