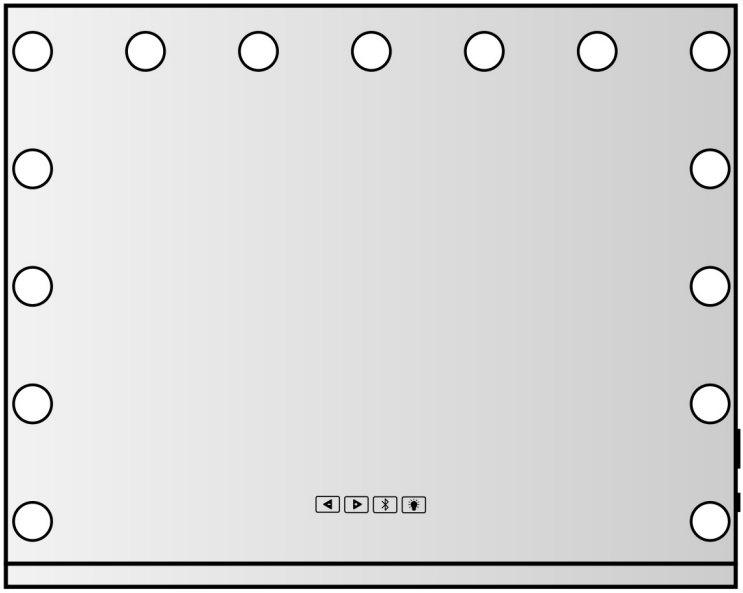

INSTRUCTION MANUAL

LED Hollywood Style Vanity Mirror

Before You Start

⚠ Please read all instructions carefully.

⚠ Retain instructions for future reference.

⚠ Separate and count all parts and hardware.

⚠ Read through each step carefully and follow the proper order.

⚠ We recommend that, where possible, all items are assembled near to the area in which they will be placed in use, to avoid moving the product unnecessarily once assembled.

⚠ Always place the product on a flat, steady and stable surface.

⚠ Keep all small parts and packaging materials for this product away from babies and children as they potentially pose a serious choking hazard.

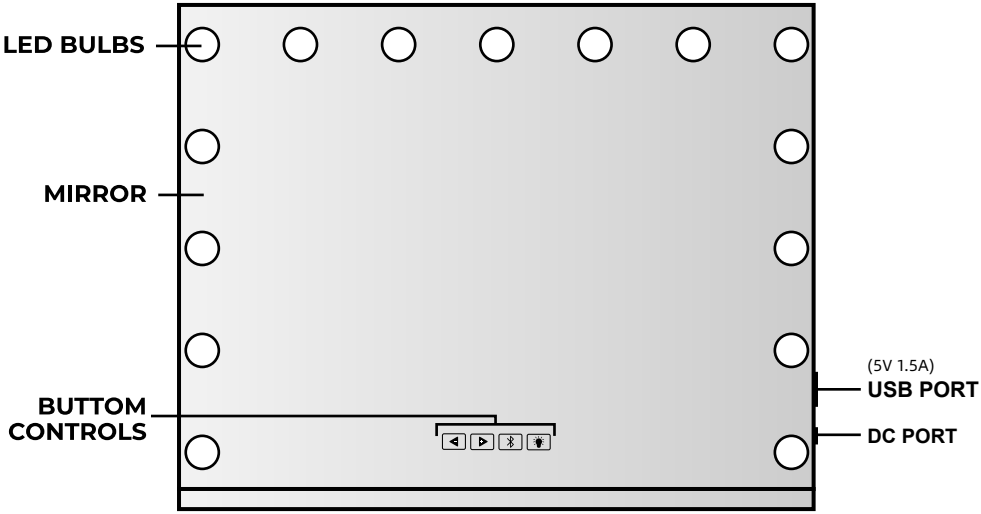
LED BULBS
MIRROR
BUTTOM CONTROLS
(5V 1.5A)
USB PORT
DC PORT

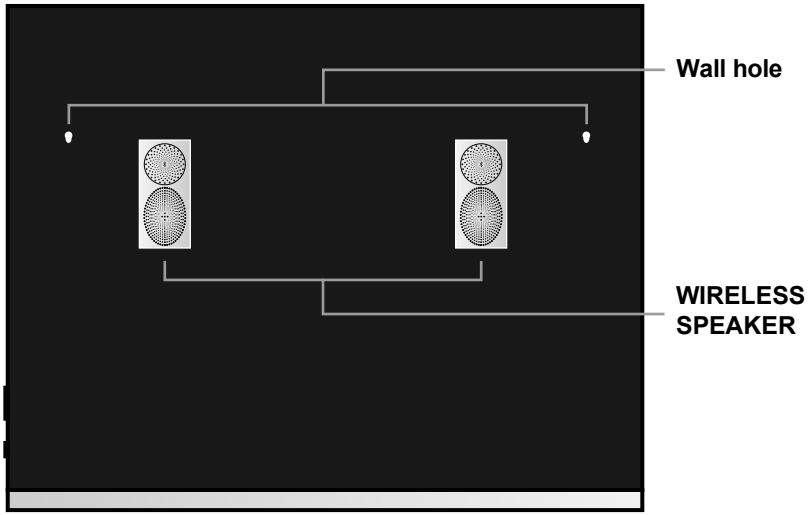
Wall hole
WIRELESS SPEAKER

BUTTON CONTROLS

1. Short press to next song
2. long press to adjust the volume

1. Short press to the previous song
2. long press to adjust the volume

Turn on the Bluetooth function

1. Short press to control the switch and change the light color
2. Long press to adjust brightness

CONTAINED ITEMS

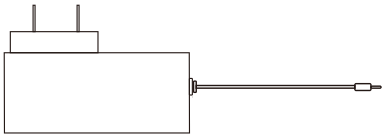

12V Power Adapter
Input 110-240V Output 12V 2A

Please use included power adapter, Do not use an unsuitable power adapter, otherwise it could damage the mirror electronics.

PRODUCT SIZE

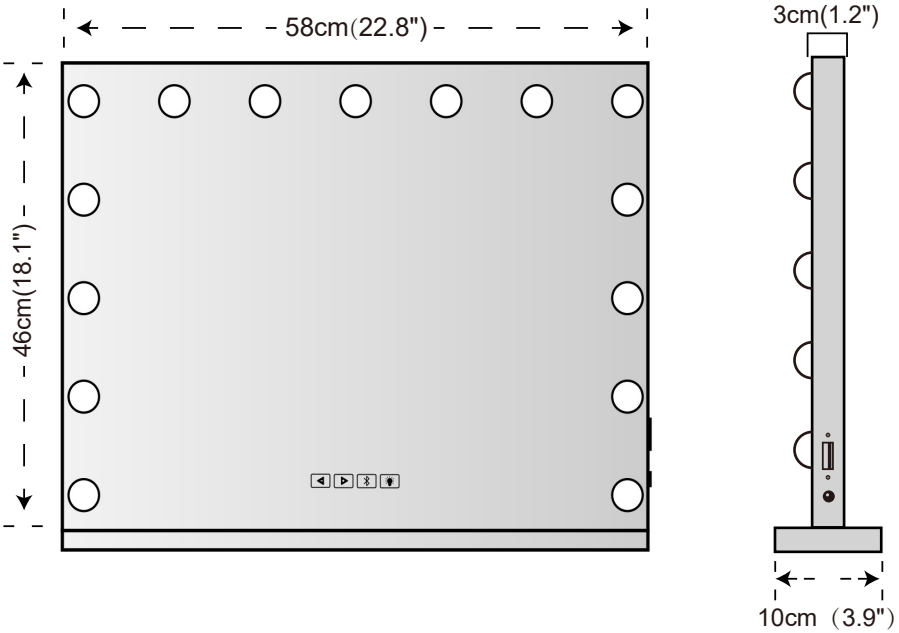

CONTAINED ITEMS

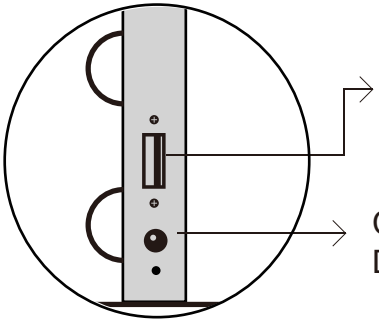

USB Port for charging the electronic advices, like mobile phone.

Connect the power to use LED Mirror lights. Disconnect the power to off LED Mirror lights.

INSTALLATION STEPS

Preparation Tools (Not Included) :

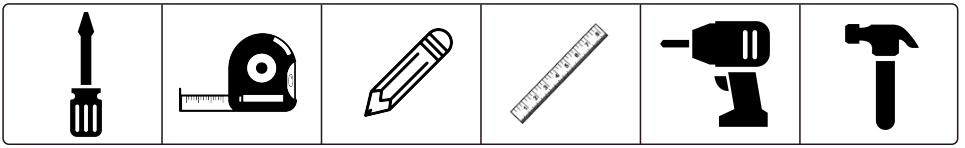

Screwdriver | Tape Measure | Pencil | Level Ruler | Electric Drill | Hammer

Desktop

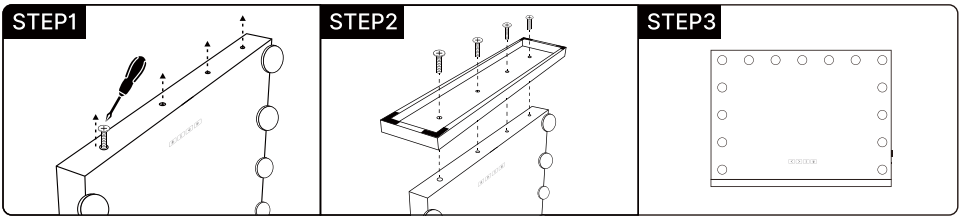

Unscrew the screws at the bottom of the mirror.

Align the holes on the base and the bottom of the mirror, and tighten the screws.

Installation is completed.

Wall-mounted

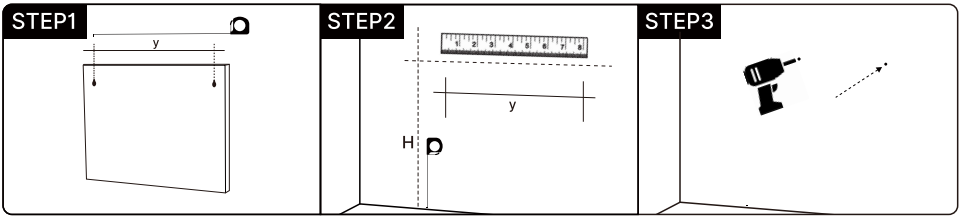

Use tape to measure the distance between the two hooks.

Use pencil to draw parallel lines on the wall, The intersection is the punch position.

Use electric drill to punch holes at the intersection.

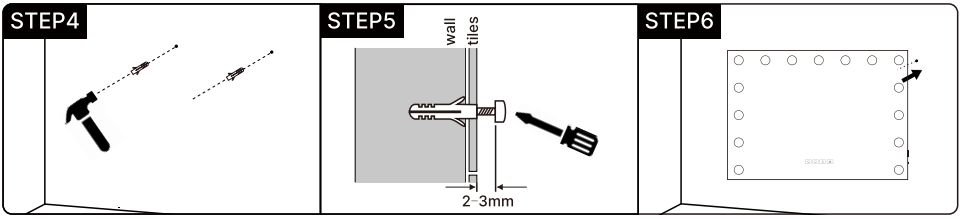

Use hammer to drive the expansion tube into the hole

Use screwdriver to screw the screw into the expansion tube.

Hang up the mirror, installation is completed.

FCC Statement

This device complies with part 15 of the FCC rules. Operation is subject to the following two conditions: (1) this device may not cause harmful interference, and (2) this device must accept any interference received, including interference that may cause undesired operation.

Changes or modifications not expressly approved by the party responsible for compliance could void the user's authority to operate the equipment.

NOTE: This equipment has been tested and found to comply with the limits for a Class B digital device, pursuant to part 15 of the FCC Rules. These limits are designed to provide reasonable protection against harmful interference in a residential installation. This equipment generates uses and can radiate radio frequency energy and, if not installed and used in accordance with the instructions, may cause harmful interference to radio communications. However, there is no guarantee that interference will not occur in a particular installation. If this equipment does cause harmful interference to radio or television reception, which can be determined by turning the equipment off and on, the user is encouraged to try to correct the interference by one or more of the following measures:

- Reorient or relocate the receiving antenna.
- Increase the separation between the equipment and receiver.
- Connect the equipment into an outlet on a circuit different from that to which the receiver is connected.
- Consult the dealer or an experienced radio/TV technician for help.

The device has been evaluated to meet general RF exposure requirement. The device can be used in portable exposure condition without restriction.