FCC PART 15C
Measurement and Test Report
For
SHUANG GE TOYS FACTORY

FCC ID:2BD8U-3801-1

FCC Rule(s)/Methods:	FCC CFR Title 47 Part 15 Subpart C Section 15.249 ANSI C63.10:2013
Product Description:	Remote control fish series
Trademark	/
Model/Type reference.:	3801-1, 606-6, 606-8, 606-9, 606-10, 606-16, 606-19A, 606-19B, 606-23, 606-24, 606-25, 606-26, 18001-1, 18001-2, 18001-31, 18001-32, 18002-1, 18002-2, 18002-31, 18002-32, 18003-1, 18003-2, 18003-3, 18003-31, 18003-32, 18003-33, 18004-1, 18004-2, 18004-3, 18004-4, 18004-31, 18004-32, 18004-33, 18004-34, 18005-1, 18005-2, 18005-3, 18005-4, 18005-31, 18005-32, 18005-33, 18005-34, 18006-1, 18006-2, 18006-3, 18006-4, 18006-31, 18006-32, 18006-33, 18006-34, JY98.
Report No.:	BSL2305318275047F
Date of receipt of test item :	Dec. 11, 2023
Date of sampling :	Dec. 11, 2023
Tested Date:	Dec. 11, 2023 to Dec. 19, 2023
Issued Date:	Dec. 19, 2023
Tested By:	Lris Yao/ Engineer Lris Yao
Reviewed By:	Levi Xiao/ EMC Manager Levi Xiao
Approved & Authorized By:	Salon Ouyang / PSQ Manager Salon Ouyang

BSL Testing Co.,LTD.
1/F, Building B, Xinshidai GR Park, Shiyan Street, Bao'an District, Shenzhen, Shiyan Street, Bao'an District, Shenzhen, Guangdong, 518052, People’s Republic of China
Tel: 400-882-9628 Fax: 86- 755-26508703

Table of Contents **Page**

1.VERSION 4
2. SUMMARY OF TEST RESULTS 5
2.1 TEST FACILITY 6
2.2 MEASUREMENT UNCERTAINTY 6
3. GENERAL INFORMATION 7
3.1 GENERAL DESCRIPTION 7
3.2 DESCRIPTION OF TEST MODES 9
3.3 BLOCK DIGRAM SHOWING THE CONFIGURATION OF SYSTEM TESTED 9
3.4 DESCRIPTION OF SUPPORT UNITS(CONDUCTED MODE) 9
3.5 EQUIPMENTS LIST FOR ALL TEST ITEMS 10
4. EMC EMISSION TEST 11
4.1 CONDUCTED EMISSION MEASUREMENT 11
4.1.1 POWER LINE CONDUCTED EMISSION Limits 11
4.1.2 TEST PROCEDURE 11
4.1.3 DEVIATION FROM TEST STANDARD 11
4.1.4 TEST SETUP 12
4.1.5 EUT OPERATING CONDITIONS 12
4.2.1 RADIATED EMISSION LIMITS 13
4.2.2 TEST PROCEDURE 14
4.2.3 DEVIATION FROM TEST STANDARD 14
4.2.4 TEST SETUP 14
4.2.5 EUT OPERATING CONDITIONS 15
5.RADIATED BAND EMISSION MEASUREMENT 21
5.1 TEST REQUIREMENT: 21
5.2 TEST PROCEDURE 21
5.3 DEVIATION FROM TEST STANDARD 21
5.4 TEST SETUP 22
5.5 EUT OPERATING CONDITIONS 22
5.6 TEST RESULT 23
6. CHANNEL BANDWIDTH 26
6.1 APPLIED PROCEDURES / LIMIT 26
6.2 TEST PROCEDURE 26
6.3 DEVIATION FROM STANDARD 26
6.4 TEST SETUP 26
6.5 EUT OPERATION CONDITIONS 26
6.6 TEST RESULT 27

Table of Contents **Page**

8.ANTENNA REQUIREMENT 29
11. TEST SETUP PHOTO 30
12. EUT CONSTRUCTIONAL DETAILS 30

1.VERSION

Report No.	Version	Description	Approved
BSL2305318275047F	Rev.01	Initial issue of report	Dec. 19, 2023

2. SUMMARY OF TEST RESULTS

Test procedures according to the technical standards:

FCC Part15 (15.247) , Subpart C			
Standard Section	Test Item	Judgment	Remark
FCC part 15.203/15.249 (c)	Antenna requirement	PASS	
FCC part 15.207	AC Power Line Conducted Emission	N/A	
FCC part 15.15.249 (a)	Field strength of the fundamental signal	PASS	
FCC part 15.15.249 (a) (d)/15.209	Spurious emissions	PASS	
FCC part 15.249 (d)/15.205	Band edge	PASS	
FCC part 15.215 (c)	20dB Occupied Bandwidth	PASS	

NOTE:

(1)“N/A” denotes test is not applicable in this Test Report

2.1 TEST FACILITY

BSL TESTING CO., LTD
Add. : 1/F, Building B, Xinshidai GR Park, Shiyan Street, Bao'an District, Shenzhen, Shiyan Street, Bao'an District, Shenzhen, Guangdong, 518052, People's Republic of China

FCC Test Firm Registration Number: 562200
Designation Number: CN1338
IC Registered No.: 11093A
Designation Number: CN0019

2.2 MEASUREMENT UNCERTAINTY

The reported uncertainty of measurement y ± U，where expended uncertainty U is based on a standard uncertainty multiplied by a coverage factor of k=2，providing a level of confidence of approximately 95 %。

No.	Item	Uncertainty
1	3m camber Radiated spurious emission(9KHz-30MHz)	U=4.5dB
2	3m camber Radiated spurious emission(30MHz-1GHz)	U=4.8dB
3	3m chamber Radiated spurious emission(1GHz-6GHz)	U=4.9dB
4	3m chamber Radiated spurious emission(6GHz-40GHz)	U=5.0dB
5	Conducted disturbance	U=3.2dB
6	RF Band Edge	U=1.68dB
7	RF power conducted	U=1.86dB
8	RF conducted Spurious Emission	U=2.2dB
9	RF Occupied Bandwidth	U=1.8dB
10	RF Power Spectral Density	U=1.75dB
11	humidity uncertainty	U=5.3%
12	Temperature uncertainty	U=0.59℃

3. GENERAL INFORMATION

3.1 GENERAL DESCRIPTION

Applicant:	SHUANG GE TOYS FACTORY
Address of applicant:	CHENGHAI DISTRICT, SHANTOU CITY, GUANGDONG PROVINCE, CHINA
Manufacturer:	SHUANG GE TOYS FACTORY
Address of manufacturer:	CHENGHAI DISTRICT, SHANTOU CITY, GUANGDONG PROVINCE, CHINA
Product Name:	Remote control fish series
Model No.:	3801-1, 606-6, 606-8, 606-9, 606-10, 606-16, 606-19A, 606-19B, 606-23, 606-24, 606-25, 606-26, 18001-1, 18001-2, 18001-31, 18001-32, 18002-1, 18002-2, 18002-31, 18002-32, 18003-1, 18003-2, 18003-3, 18003-31, 18003-32, 18003-33, 18004-1, 18004-2, 18004-3, 18004-4, 18004-31, 18004-32, 18004-33, 18004-34, 18005-1, 18005-2, 18005-3, 18005-4, 18005-31, 18005-32, 18005-33, 18005-34, 18006-1, 18006-2, 18006-3, 18006-4, 18006-31, 18006-32, 18006-33, 18006-34, JY98.
Model Different.:	The product is different for model name.
Serial No.:	N/A
Sample(s) Status:	Engineer sample
Operation Frequency:	2410MHz~2470MHz
Channel Numbers:	31
Modulation Type:	GFSK
Antenna Type:	Wire antenna
Antenna gain:	0.12dBi
Power supply:	TX:DC3.0V(2*1.5V Size”AA”Battery)
SWITCHING POWER ADAPTER:	N/A

Operation Frequency each of channel							
Channel	Frequency	Channel	Frequency	Channel	Frequency	Channel	Frequency
1	2410 MHz	11	2430 MHz	21	2450 MHz	31	2470 MHz
2	2413 MHz	12	2433 MHz	22	2453 MHz		
3	2414 MHz	13	2434 MHz	23	2454 MHz		
4	2417 MHz	14	2437 MHz	24	2457 MHz		
5	2418 MHz	15	2438 MHz	25	2458 MHz		
6	2421 MHz	16	2441 MHz	26	2461 MHz		
7	2422 MHz	17	2442 MHz	27	2462 MHz		
8	2425 MHz	18	2445 MHz	28	2465 MHz		
9	2426 MHz	19	2446 MHz	29	2466 MHz		
10	2429 MHz	20	2449 MHz	30	2469 MHz		

Note:
In section 15.31(m), regards to the operating frequency range over 10 MHz, the Lowest frequency, the middle frequency, and the highest frequency of channel were selected to perform the test, and the selected channel see below:

Channel	**Frequency**
The lowest channel	2410MHz
The middle channel	2442MHz
The Highest channel	2470MHz

3.2 DESCRIPTION OF TEST MODES

Transmitting mode	Keep the EUT in continuously transmitting mode
Remark: During the test, the test voltage was tuned from 85% to 115% of the nominal rated supply voltage, and found that the worst case was under the nominal rated supply condition. So the report just shows that condition's data.	

Test Software	BLE Test Tool
Power level setup	<0dBm

3.3 BLOCK DIGRAM SHOWING THE CONFIGURATION OF SYSTEM TESTED

Conducted Emission

EUT

Radiated Emission

EUT

Conducted Spurious

EUT

3.4 DESCRIPTION OF SUPPORT UNITS(CONDUCTED MODE)

The EUT has been tested as an independent unit together with other necessary accessories or support units. The following support units or accessories were used to form a representative test configuration during the tests.

Item	Equipment	Mfr/Brand	Model/Type No.	Series No.	Note
/	/	/	/	/	/

Item	Shielded Type	Ferrite Core	Length	Note

Note:

(1) The support equipment was authorized by Declaration of Confirmation.

(2) For detachable type I/O cable should be specified the length in cm in『Length』column.

3.5 EQUIPMENTS LIST FOR ALL TEST ITEMS

Radiation Test equipment

Item	Equipment	Manufacturer	Type No.	Serial No.	Last calibration	Calibrated until
1	Communication Tester	Rohde & Schwarz	CMW500	100358 Firewaware: 4.43 SP4	Oct. 22, 2023	Oct. 21, 2024
2	Spectrum Analyzer	KEYSIGHT	9020A	MY55370835	Oct. 22, 2023	Oct. 21, 2024
3	Test Receiver	R&S	ESCI7	US47140102 Firewaware: 4.42 SP3	Oct. 22, 2023	Oct. 21, 2024
4	Signal Generator	HP	83630B	3844A01028	Oct. 22, 2023	Oct. 21, 2024
5	Signal Generator	IFR	2023A	202307/242	Oct. 22, 2023	Oct. 21, 2024
6	Amplifier	Agilent	8449B	4035A00116	Oct. 22, 2023	Oct. 21, 2024
7	Amplifier	HP	8447E	2945A02770	Oct. 22, 2023	Oct. 21, 2024
8	Broadband Antenna	SCHAFFNER	2774	2774	Feb.28,2022	Feb.27,2025
9	Biconical and log periodic antennas	ELECTRO-METRICS	EM-6917B-1	171	Feb.28,2022	Feb.27,2025
10	Horn Antenna	R&S	HF906	100253	Feb.28,2022	Feb.27,2025
11	Horn Antenna	Schwarzbeck	BBHA9170	00814	Feb.28,2022	Feb.27,2025
12	Horn Antenna	EM	EM-6961	6462	Feb.28,2022	Feb.27,2025
13	3m Semi-Anechoic Chamber	Chengyu Electron	9 (L)*6 (W)* 6 (H)	BSL086	Feb.28,2022	Feb.27,2025
14	Loop Antenna	ZHINAN	ZN30900C	20073	Feb.28,2022	Feb.27,2025
15	power meter	DARE	RPR3006W	15I00041SNO0	Oct.28,2022 Oct.27,2023	Oct.27,2023 Oct.26,2024
16	RF Control Unit	MWRFtest	Mw100	-	Oct.28,2022 Oct.27,2023	Oct.27,2023 Oct.26,2024
17	Test software	MWRFtest	V8310	-	-	-
18	Turntable	MF	MF-7802BS	N/A	\	\
19	Antenna tower	MF	MF-7802BS	N/A	\	\
20	Signal Generator	Agilent	N5182A	N/A	Oct.28,2022 Oct.27,2023	Oct.27,2023 Oct.26,2024

RF Conduction Test equipment

Item	Kind of Equipment	Manufacturer	Type No.	Serial No.	Last calibration	Calibrated until
1	Spectrum Analyzer (9kHz-26.5GHz)	KEYSIGHT	9020A	MY55370835	Oct.28,2022 Oct.27,2023	Oct.27,2023 Oct.26,2024
2	MWRF Power Meter Test system	MW	MW100-RPCB	N/A	Oct.28,2022 Oct.27,2023	Oct.27,2023 Oct.26,2024
3	D.C. Power Supply	LongWei	TPR-6405D	N/A	\	\
4	RF Software	MW	MTS8310	V2.0.0.0	\	\

4. EMC EMISSION TEST

4.1 CONDUCTED EMISSION MEASUREMENT

Test Requirement:	FCC Part15 C Section 15.207
Test Method:	ANSI C63.10:2013
Test Frequency Range:	150KHz to 30MHz
Receiver setup:	RBW=9KHz, VBW=30KHz, Sweep time=auto

4.1.1 POWER LINE CONDUCTED EMISSION Limits

FREQUENCY (MHz)	Limit (dBuV)		Standard
	Quas-peak	Average	
0.15 -0.5	66 - 56 *	56 - 46 *	FCC
0.50 -5.0	56.00	46.00	FCC
5.0 -30.0	60.00	50.00	FCC

Note:

(1) *Decreases with the logarithm of the frequency.

4.1.2 TEST PROCEDURE

a. The EUT was placed 0.8 meters from the horizontal ground plane with EUT being connected to the power mains through a line impedance stabilization network (LISN). All other support equipments powered from additional LISN(s). The LISN provide 50 Ohm/ 50uH of coupling impedance for the measuring instrument.
b. Interconnecting cables that hang closer than 40 cm to the ground plane shall be folded back and forth in the center forming a bundle 30 to 40 cm long.
c. I/O cables that are not connected to a peripheral shall be bundled in the center. The end of the cable may be terminated, if required, using the correct terminating impedance. The overall length shall not exceed 1 m.
d. LISN at least 80 cm from nearest part of EUT chassis.
e. For the actual test configuration, please refer to the related Item –EUT Test Photos.

4.1.3 DEVIATION FROM TEST STANDARD

No deviation

4.1.4 TEST SETUP

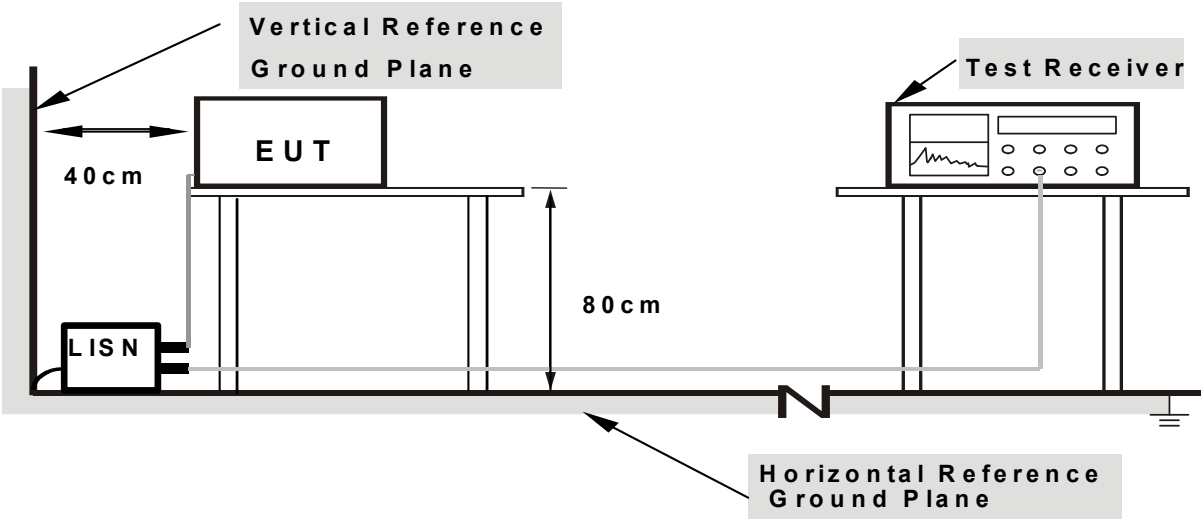

Note: 1.Support units were connected to second LISN.
2.Both of LISNs (AMN) are 80 cm from EUT and at least 80 from other units and other metal planes

4.1.5 EUT OPERATING CONDITIONS

The EUT was configured for testing in a typical fashion (as a customer would normally use it). The EUT has been programmed to Charging during test. This operating condition was tested and used to collect the included data.

We pretest AC 120V and AC 230V, the worst voltage was AC 120V and the data recording in the report.

4.1.6 Test Result
N/A
The EUT is battery-powered

4.2 RADIATED EMISSION MEASUREMENT and Field Strength of The Fundamental Signal

Test Requirement:	FCC Part15 C Section 15.209
Test Method:	ANSI C63.10:2013
Test Frequency Range:	9kHz to 25GHz
Test site:	Measurement Distance: 3m
Receiver setup:	

Frequency	Detector	RBW	VBW	Value
9KHz-150KHz	Quasi-peak	200Hz	600Hz	Quasi-peak
150KHz-30MHz	Quasi-peak	9KHz	30KHz	Quasi-peak
30MHz-1GHz	Quasi-peak	100KHz	300KHz	Quasi-peak
Above 1GHz	Peak	1MHz	3MHz	Peak
	Peak	1MHz	10Hz	Average

4.2.1 RADIATED EMISSION LIMITS

Frequencies (MHz)	Field Strength (micorvolts/meter)	Measurement Distance (meters)
0.009~0.490	2400/F(KHz)	300
0.490~1.705	24000/F(KHz)	30
1.705~30.0	30	30
30~88	100	3
88~216	150	3
216~960	200	3
Above 960	500	3

LIMITS OF RADIATED EMISSION MEASUREMENT

FREQUENCY (MHz)	Limit (dBuV/m) (at 3M)	
	PEAK	AVERAGE
Above 1000	74	54

Notes:

(1) The limit for radiated test was performed according to FCC PART 15C.

(2) The tighter limit applies at the band edges.

(3) Emission level (dBuV/m)=20log Emission level (uV/m).

4.2.2 TEST PROCEDURE

a. The measuring distance of at 3 m shall be used for measurements at frequency up to 25GHz. For frequencies above 1GHz, any suitable measuring distance may be used.
b. The EUT was placed on the top of a rotating table 0.8 meters above the ground at a 3 meter semi-chamber test. The table was rotated 360 degrees to determine the position of the highest radiation.
c. The height of the equipment or of the substitution antenna shall be 0.8m; above 1GHz, the height was 1.5m, the height of the test antenna shall vary between 1 m to 4 m. Both horizontal and vertical polarizations of the antenna are set to make the measurement.
d. The initial step in collecting conducted emission data is a spectrum analyzer peak detector mode pre-scanning the measurement frequency range. Significant peaks are then marked and then Quasi Peak detector mode re-measured.
e. If the Peak Mode measured value compliance with and lower than Quasi Peak Mode Limit, the EUT shall be deemed to meet QP Limits and then no additional QP Mode measurement performed.
f. For the actual test configuration, please refer to the related Item –EUT Test Photos.
g. For the radiated emission test above 1GHz:
Place the measurement antenna away from each area of the EUT determined to be a source of emissions at the specified measurement distance, while keeping the measurement antenna aimed at the source of emissions at each frequency of significant emissions, with polarization oriented for maximum response.
The measurement antenna may have to be higher or lower than the EUT, depending on the radiation pattern of the emission and staying aimed at the emission source for receiving the maximum signal. The final measurement antenna elevation shall be that which maximizes the emissions. The measurement antenna elevation for maximum emissions shall be restricted to a range of heights of from 1 m to 4 m above the ground or reference ground plane.
Note:
Both horizontal and vertical antenna polarities were tested
and performed pretest to three orthogonal axis. The worst case emissions were reported

4.2.3 DEVIATION FROM TEST STANDARD

No deviation

4.2.4 TEST SETUP

（A）Radiated Emission Test-Up Frequency Below 30MHz

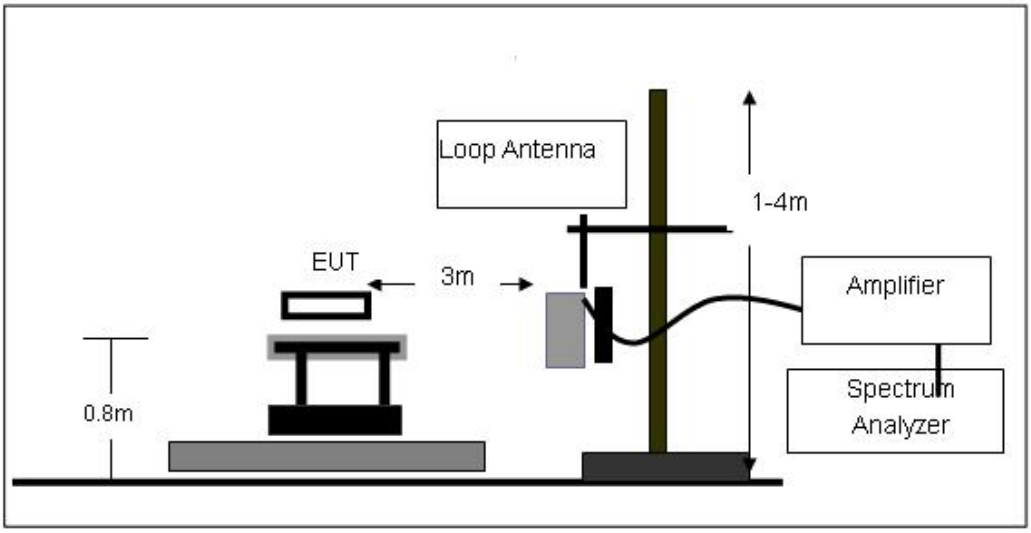

（B）Radiated Emission Test-Up Frequency 30MHz~1GHz

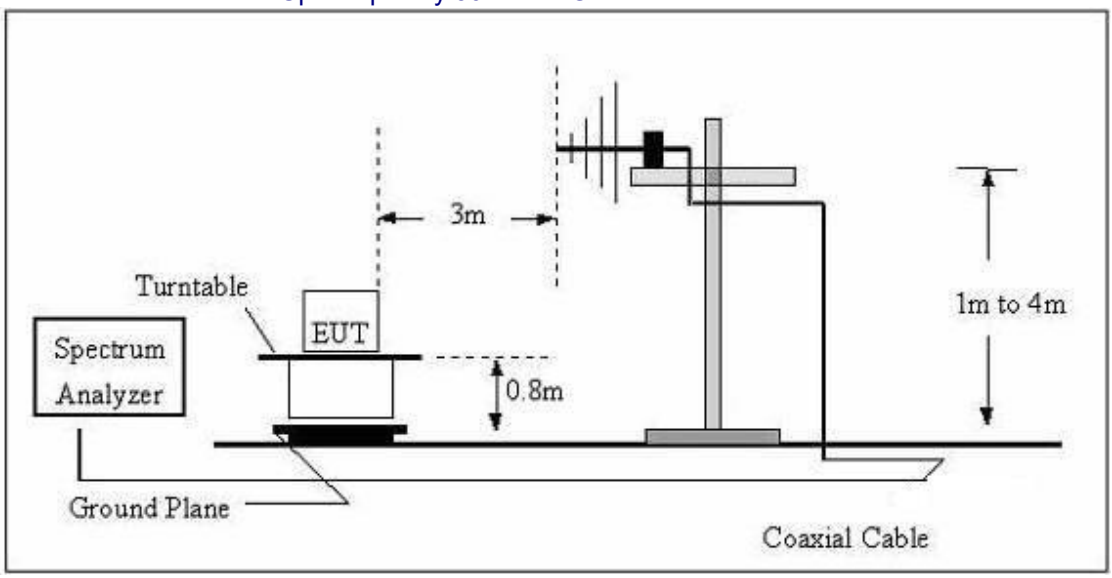

（C）Radiated Emission Test-Up Frequency Above 1GHz

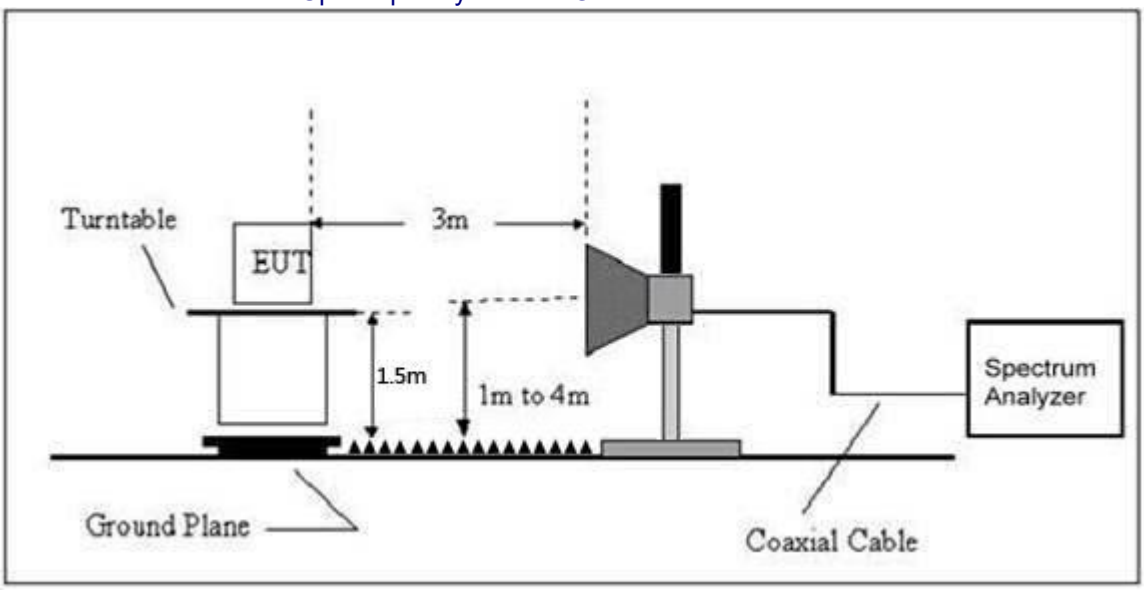

4.2.5 EUT OPERATING CONDITIONS

The EUT tested system was configured as the statements of 2.4 Unless otherwise a special operating condition is specified in the follows during the testing.

4.2.6 TEST RESULTS (Between 9KHz – 30 MHz)

The emission from 9 kHz to 30MHz was pre-tested and found the result was 20dB lower than the limit, and according to 15.31(o) & RSS-Gen 6.13, the test result no need to reported.

Between 30MHz – 1GHz (Worst case GFSK 2410MHz)

Temperature:	26℃	Relative Humidity:	54%
Pressure:	101kPa	Polarization:	Horizontal
Test Voltage:	DC 3.0V		

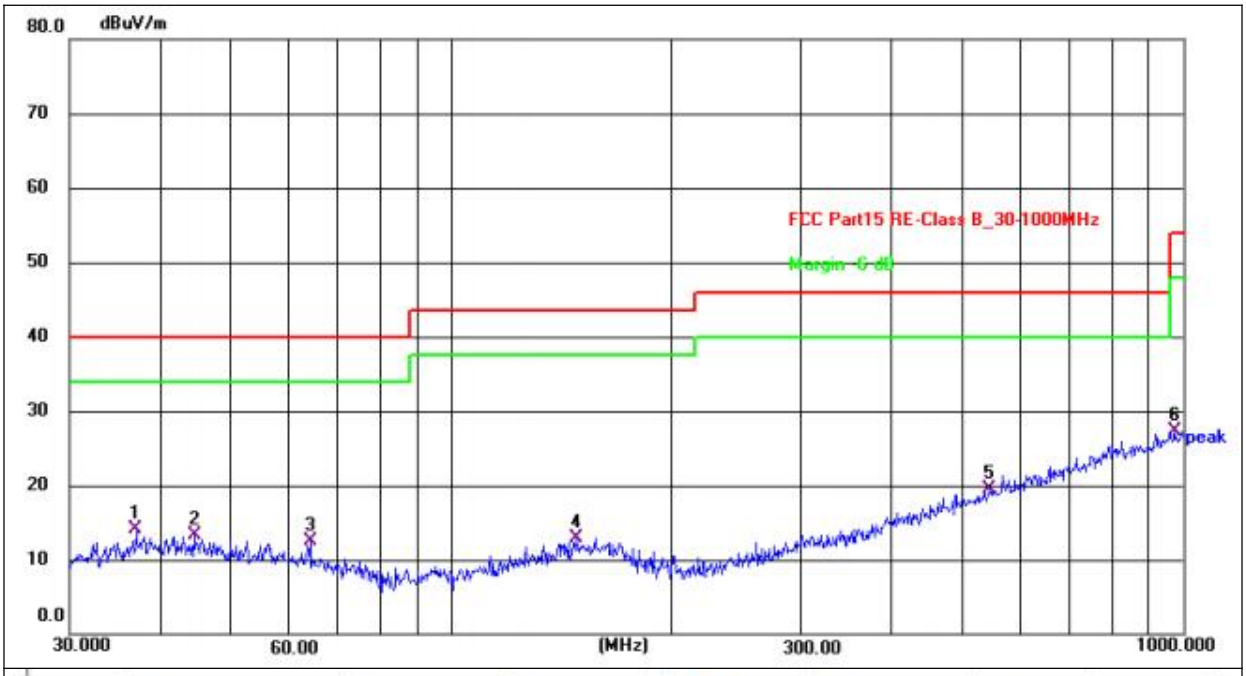

No.	Frequency (MHz)	Reading (dBuV)	Factor (dB/m)	Level (dBuV/m)	Limit (dBuV/m)	Margin (dB)	Detector
1 *	37.0248	30.16	-16.14	14.02	40.00	-25.98	QP
2	44.4308	29.17	-15.93	13.24	40.00	-26.76	QP
3	63.9828	30.16	-17.64	12.52	40.00	-27.48	QP
4	147.9214	28.88	-16.00	12.88	43.50	-30.62	QP
5	543.2742	29.45	-9.89	19.56	46.00	-26.44	QP
6	972.3374	29.63	-2.35	27.28	54.00	-26.72	QP

Temperature:	26℃	Relative Humidity:	54%
Pressure:	101kPa	Polarization:	Vertical
Test Voltage:	DC 3.0V		

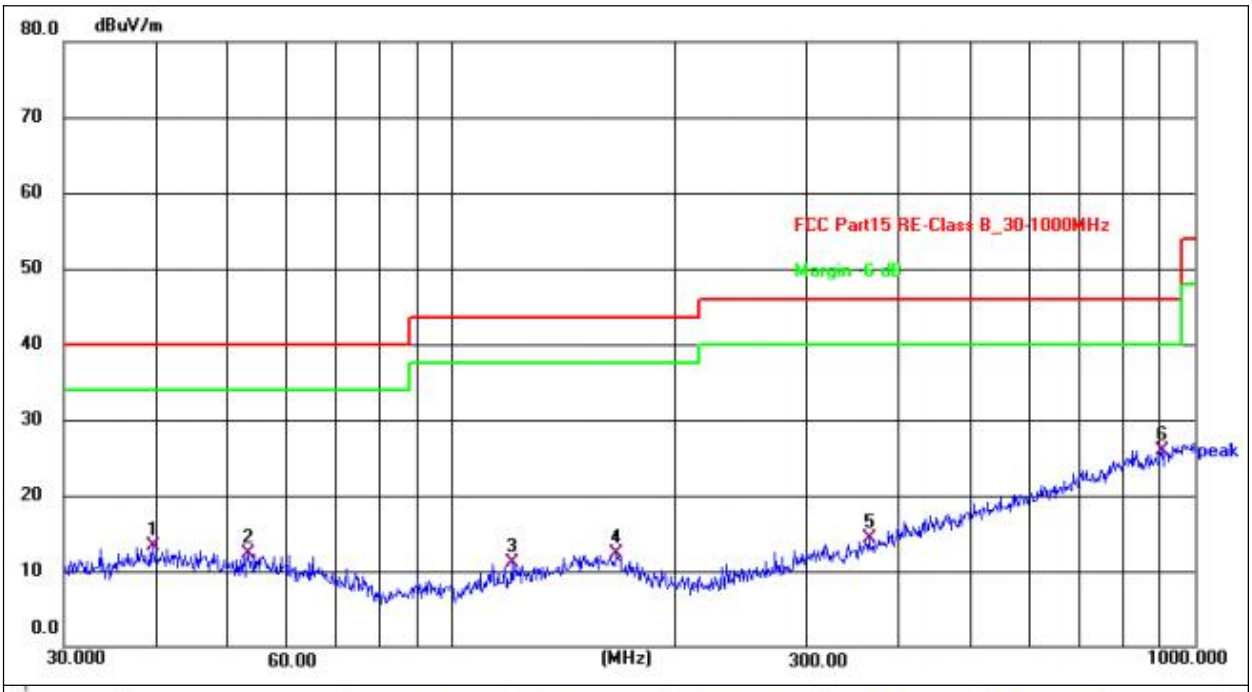

No.	Frequency (MHz)	Reading (dBuV)	Factor (dB/m)	Level (dBuV/m)	Limit (dBuV/m)	Margin (dB)	Detector
1	39.5757	28.98	-15.76	13.22	40.00	-26.78	QP
2	53.1313	29.07	-16.85	12.22	40.00	-27.78	QP
3	120.2766	29.20	-18.15	11.05	43.50	-32.45	QP
4	166.6514	28.48	-16.25	12.23	43.50	-31.27	QP
5	364.2595	28.86	-14.54	14.32	46.00	-31.68	QP
6 *	903.3094	29.53	-3.55	25.98	46.00	-20.02	QP

Remarks:
1.Final Level =Receiver Read level + Antenna Factor + Cable Loss – Preamplifier Factor
2.The emission levels of other frequencies are very lower than the limit and not show in test report.

1GHz~25GHz

Polar (H/V)	Frequency (MHz)	Meter Reading (dBuV)	Pre-amplifier (dB)	Cable Loss (dB)	Antenna Factor (dB)	Emission Level (dBuV/m)	Limits (dBuV/m)	Margin (dB)	Detector Type
Low Channel:2410MHz									
V	4820	53.14	30.55	5.77	24.66	53.02	74.00	-20.98	Pk
V	4820	43.62	30.55	5.77	24.66	43.50	54.00	-10.50	AV
V	7230	50.95	30.33	6.32	24.55	51.49	74.00	-22.51	Pk
V	7230	43.46	30.33	6.32	24.55	44.00	54.00	-10.00	AV
V	9640	50.88	30.85	7.45	24.69	52.17	74.00	-21.83	Pk
V	9640	43.95	30.85	7.45	24.69	45.24	54.00	-8.76	AV
V	12050	50.21	31.02	8.99	25.57	53.75	74.00	-20.25	Pk
V	12050	43.58	31.02	8.99	25.57	47.12	54.00	-6.88	AV
H	4820	53.19	30.55	5.77	24.66	53.07	74.00	-20.93	Pk
H	4820	43.97	30.55	5.77	24.66	43.85	54.00	-10.15	AV
H	7230	53.14	30.33	6.32	24.55	53.68	74.00	-20.32	Pk
H	7230	43.30	30.33	6.32	24.55	43.84	54.00	-10.16	AV
H	9640	51.10	30.85	7.45	24.69	52.39	74.00	-21.61	Pk
H	9640	43.19	30.85	7.45	24.69	44.48	54.00	-9.52	AV
H	12050	52.67	31.02	8.99	25.57	56.21	74.00	-17.79	Pk
H	12050	43.96	31.02	8.99	25.57	47.50	54.00	-6.50	AV

Polar (H/V)	Frequency (MHz)	Meter Reading (dBuV)	Pre-amplifier (dB)	Cable Loss (dB)	Antenna Factor (dB)	Emission Level (dBuV/m)	Limits (dBuV/m)	Margin (dB)	Detector Type
Middle Channel:2442MHz									
V	4884	51.69	30.55	5.77	24.66	51.57	74.00	-22.43	Pk
V	4884	43.19	30.55	5.77	24.66	43.07	54.00	-10.93	AV
V	7326	53.43	30.33	6.32	24.55	53.97	74.00	-20.03	Pk
V	7326	43.50	30.33	6.32	24.55	44.04	54.00	-9.96	AV
V	9768	51.06	30.85	7.45	24.69	52.35	74.00	-21.65	Pk
V	9768	43.94	30.85	7.45	24.69	45.23	54.00	-8.77	AV
V	12210	53.18	31.02	8.99	25.57	56.72	74.00	-17.28	Pk
V	12210	43.44	31.02	8.99	25.57	46.98	54.00	-7.02	AV
H	4884	51.26	30.55	5.77	24.66	51.14	74.00	-22.86	Pk
H	4884	43.56	30.55	5.77	24.66	43.44	54.00	-10.56	AV
H	7326	52.15	30.33	6.32	24.55	52.69	74.00	-21.31	Pk
H	7326	43.44	30.33	6.32	24.55	43.98	54.00	-10.02	AV
H	9768	52.45	30.85	7.45	24.69	53.74	74.00	-20.26	Pk
H	9768	43.04	30.85	7.45	24.69	44.33	54.00	-9.67	AV
H	12210	52.54	31.02	8.99	25.57	56.08	74.00	-17.92	Pk
H	12210	43.48	31.02	8.99	25.57	47.02	54.00	-6.98	AV

Polar (H/V)	Frequency (MHz)	Meter Reading (dBuV)	Pre-amplifier (dB)	Cable Loss (dB)	Antenna Factor (dB)	Emission Level (dBuV/m)	Limits (dBuV/m)	Margin (dB)	Detector Type
High Channel:2470MHz									
V	4940	50.06	30.55	5.77	24.66	49.94	74.00	-24.06	Pk
V	4940	43.32	30.55	5.77	24.66	43.20	54.00	-10.80	AV
V	7410	53.27	30.33	6.32	24.55	53.81	74.00	-20.19	Pk
V	7410	43.62	30.33	6.32	24.55	44.16	54.00	-9.84	AV
V	9880	54.30	30.85	7.45	24.69	55.59	74.00	-18.41	Pk
V	9880	43.23	30.85	7.45	24.69	44.52	54.00	-9.48	AV
V	12350	50.60	31.02	8.99	25.57	54.14	74.00	-19.86	Pk
V	12350	43.93	31.02	8.99	25.57	47.47	54.00	-6.53	AV
H	4940	52.83	30.55	5.77	24.66	52.71	74.00	-21.29	Pk
H	4940	43.04	30.55	5.77	24.66	42.92	54.00	-11.08	AV
H	7410	50.41	30.33	6.32	24.55	50.95	74.00	-23.05	Pk
H	7410	43.73	30.33	6.32	24.55	44.27	54.00	-9.73	AV
H	9880	50.17	30.85	7.45	24.69	51.46	74.00	-22.54	Pk
H	9880	43.49	30.85	7.45	24.69	44.78	54.00	-9.22	AV
H	12350	51.44	31.02	8.99	25.57	54.98	74.00	-19.02	Pk
H	12350	43.18	31.02	8.99	25.57	46.72	54.00	-7.28	AV

Remark:

1. Emission Level = Meter Reading + Antenna Factor + Cable Loss − Pre-amplifier,
Margin= Emission Level - Limit
2. If peak below the average limit, the average emission was no test.
3. The amplitude of spurious emissions which are attenuated by more than 20dB below the permissible value has no need to be reported.

Field Strength of The Fundamental Signal Data

Low CH

Frequency	Receiver Reading	Detector	Turn table Angle	RX Antenna		Corrected Factor	Corrected Amplitude	Limit	Margin
				Height	Polar				
(MHz)	(dBμV)	(PK/QP/Ave)	Degree	(m)	(H/V)	(dB)	(dBμV/m)	(dBμV/m)	(dB)
GFSK Low Channel 2410MHz									
2410.00	89.35	PK	200	1.5	V	-4.06	85.29	114.00	-28.71
2410.00	82.50	Ave	200	1.5	V	-4.06	78.44	94.00	-15.56
2410.00	85.36	PK	347	1.7	H	-4.06	81.30	114.00	-32.70
2410.00	81.50	Ave	347	1.7	H	-4.06	77.44	94.00	-16.56

Mid CH

Frequency	Receiver Reading	Detector	Turn table Angle	RX Antenna		Corrected Factor	Corrected Amplitude	Limit	Margin
				Height	Polar				
(MHz)	(dBμV)	(PK/QP/Ave)	Degree	(m)	(H/V)	(dB)	(dBμV/m)	(dBμV/m)	(dB)
GFSK Low Channel 2442MHz									
2442.00	85.69	PK	322	1.7	V	-3.97	81.72	114.00	-32.28
2442.00	80.26	Ave	322	1.7	V	-3.97	76.29	94.00	-17.71
2442.00	83.65	PK	181	1.3	H	-3.97	79.68	114.00	-34.32
2442.00	78.95	Ave	181	1.3	H	-3.97	74.98	94.00	-19.02

High CH

Frequency	Receiver Reading	Detector	Turn table Angle	RX Antenna		Corrected Factor	Corrected Amplitude	Limit	Margin
				Height	Polar				
(MHz)	(dBμV)	(PK/QP/Ave)	Degree	(m)	(H/V)	(dB)	(dBμV/m)	(dBμV/m)	(dB)
GFSK Low Channel 2470MHz									
2470.00	86.32	PK	98	1.6	V	-3.90	82.42	114.00	-31.58
2470.00	80.95	Ave	98	1.6	V	-3.90	77.05	94.00	-16.95
2470.00	88.36	PK	319	1.4	H	-3.90	84.46	114.00	-29.54
2470.00	83.65	Ave	319	1.4	H	-3.90	79.75	94.00	-14.25

5.RADIATED BAND EMISSION MEASUREMENT

5.1 TEST REQUIREMENT:

Test Requirement:	FCC Part15 C Section 15.209 and 15.205
Test Method:	ANSI C63.10: 2013
Test Frequency Range:	All of the restrict bands were tested, only the worst band's (2310MHz to 2500MHz) data was showed.
Test site:	Measurement Distance: 3m
Receiver setup:	

Frequency	Detector	RBW	VBW	Value
Above 1GHz	Peak	1MHz	3MHz	Peak
	Average	1MHz	3MHz	Average

LIMITS OF RADIATED EMISSION MEASUREMENT (Above 1000MHz)

FREQUENCY (MHz)	Limit (dBuV/m) (at 3M)	
	PEAK	AVERAGE
Above 1000	74	54

Notes:

(1) The limit for radiated test was performed according to FCC PART 15C.

(2) The tighter limit applies at the band edges.

(3) Emission level (dBuV/m)=20log Emission level (uV/m).

5.2 TEST PROCEDURE

Above 1GHz test procedure as below:

a. 1. The EUT was placed on the top of a rotating table 1.5 meters above the ground at a 3 meter camber. The table was rotated 360 degrees to determine the position of the highest radiation.

b. The EUT was set 3 meters away from the interference-receiving antenna, which was mounted on the top of a variable-height antenna tower.

c. The antenna height is varied from one meter to four meters above the ground to determine the maximum value of the field strength. Both horizontal and vertical polarizations of the antenna are set to make the measurement.

d. For each suspected emission, the EUT was arranged to its worst case and then the antenna was tuned to heights from 1 meter to 4 meters and the rota table was turned from 0 degrees to 360 degrees to find the maximum reading.

e. The test-receiver system was set to Peak Detect Function and Specified Bandwidth with Maximum Hold Mode.

f. If the emission level of the EUT in peak mode was 10dB lower than the limit specified, then testing could be stopped and the peak values of the EUT would be reported. Otherwise the emissions that did not have 10dB margin would be re-tested one by one using peak, quasi-peak or average method as specified and then reported in a data sheet.

g. Test the EUT in the lowest channel,the Highest channel

Note:

Both horizontal and vertical antenna polarities were tested
and performed pretest to three orthogonal axis. The worst case emissions were reported

5.3 DEVIATION FROM TEST STANDARD

No deviation

5.4 TEST SETUP

Radiated Emission Test-Up Frequency Above 1GHz

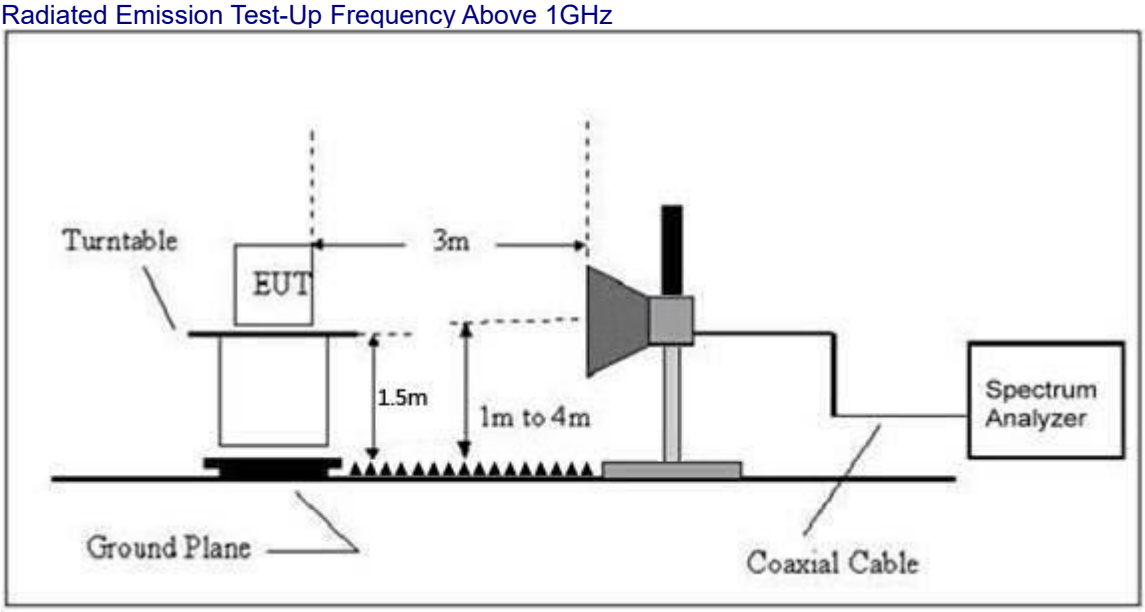

5.5 EUT OPERATING CONDITIONS

The EUT tested system was configured as the statements of 2.3 Unless otherwise a special operating condition is specified in the follows during the testing.

5.6 TEST RESULT

Polarization:	H

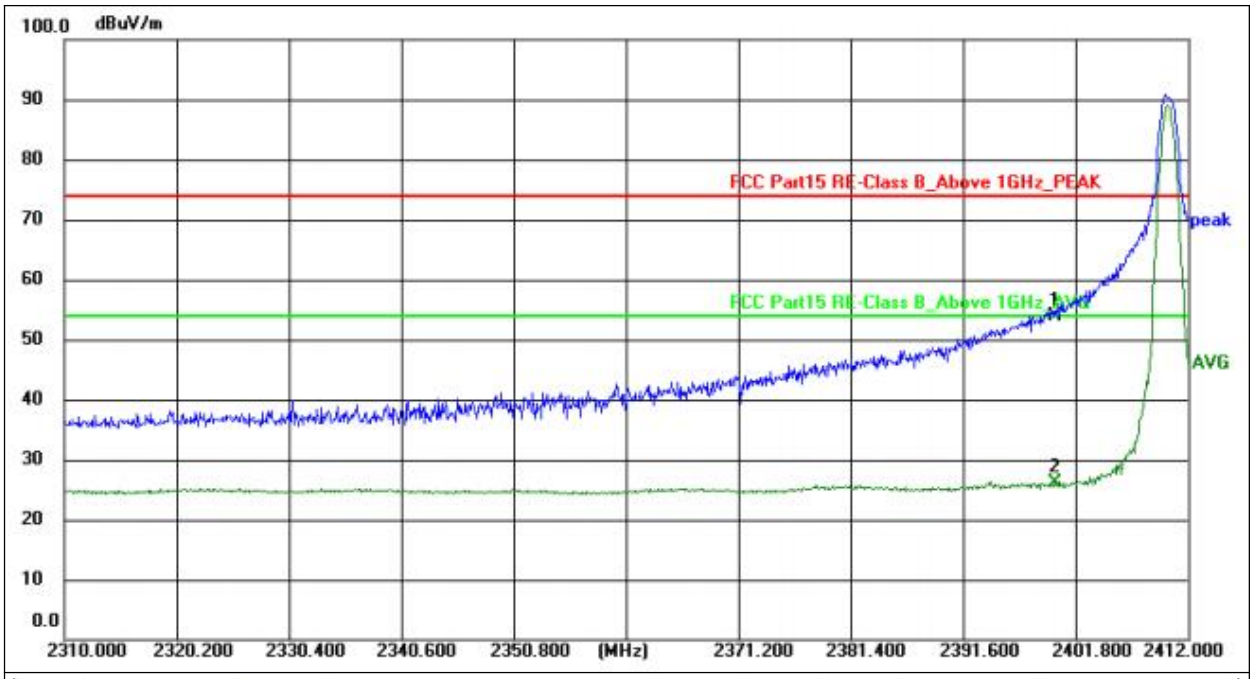

No.	Frequency (MHz)	Reading (dBuV)	Factor (dB/m)	Level (dBuV/m)	Limit (dBuV/m)	Margin (dB)	Detector	Height (cm)	Azimuth (deg.)	P/F	Remark
1 *	2400.000	58.07	-4.09	53.98	74.00	-20.02	peak			P	
2	2400.000	30.28	-4.09	26.19	54.00	-27.81	AVG			P	

Polarization:	V

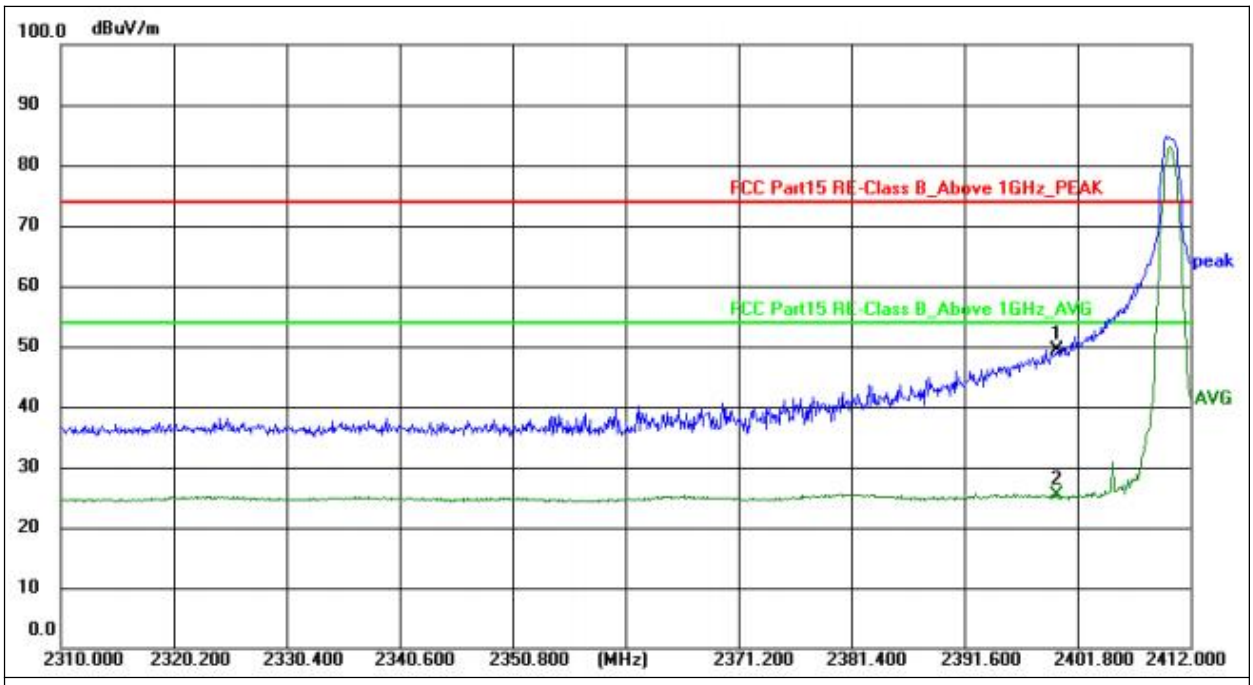

No.	Frequency (MHz)	Reading (dBuV)	Factor (dB/m)	Level (dBuV/m)	Limit (dBuV/m)	Margin (dB)	Detector	Height (cm)	Azimuth (deg.)	P/F	Remark
1 *	2400.000	53.30	-3.93	49.37	74.00	-24.63	peak			P	
2	2400.000	29.20	-3.93	25.27	54.00	-28.73	AVG			P	

Polarization:	H

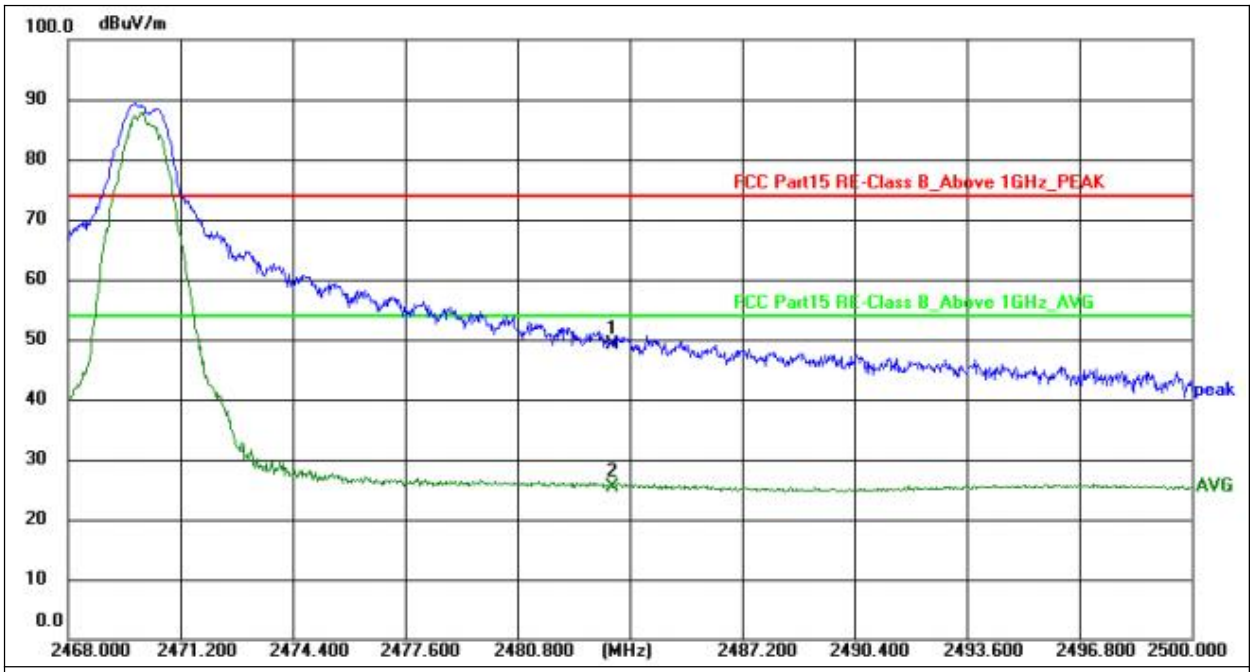

No.	Frequency (MHz)	Reading (dBuV)	Factor (dB/m)	Level (dBuV/m)	Limit (dBuV/m)	Margin (dB)	Detector	Height (cm)	Azimuth (deg.)	P/F	Remark
1 *	2483.500	52.98	-3.85	49.13	74.00	-24.87	peak			P	
2	2483.500	29.31	-3.85	25.46	54.00	-28.54	AVG			P	

Polarization:	V

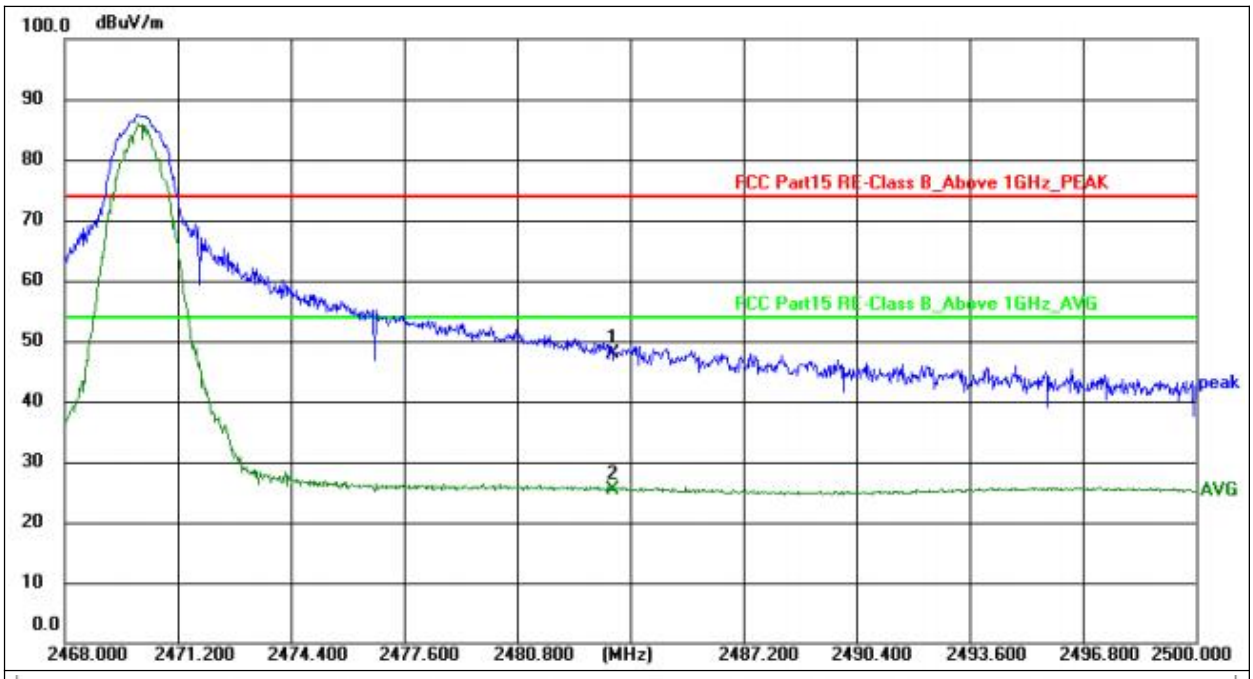

No.	Frequency (MHz)	Reading (dBuV)	Factor (dB/m)	Level (dBuV/m)	Limit (dBuV/m)	Margin (dB)	Detector	Height (cm)	Azimuth (deg.)	P/F	Remark
1 *	2483.500	51.56	-3.58	47.98	74.00	-26.02	peak			P	
2	2483.500	28.94	-3.58	25.36	54.00	-28.64	AVG			P	

6. CHANNEL BANDWIDTH

Test Requirement:	FCC Part15 C Section 15.249
Test Method:	KDB558074 D0115.249 Meas Guidance v05r02

6.1 APPLIED PROCEDURES / LIMIT

FCC Part15 (15.249) , Subpart C				
Section	Test Item	Limit	Frequency Range (MHz)	Result
15.249	Bandwidth	(-20dB bandwidth)	2400-2483.5	PASS

6.2 TEST PROCEDURE

1. Set RBW = 9.1 kHz.
2. Set the video bandwidth (VBW) ≥ 3 x RBW.
3. Detector = Peak.
4. Trace mode = max hold.
5. Sweep = auto couple.
6. Allow the trace to stabilize.
7. Measure the maximum width of the emission that is constrained by the frequencies associated with the two outermost amplitude points (upper and lower frequencies) that are attenuated by 6 dB relative to the maximum level measured in the fundamental emission.

6.3 DEVIATION FROM STANDARD

No deviation.

6.4 TEST SETUP

6.5 EUT OPERATION CONDITIONS

The EUT tested system was configured as the statements of 2.4 Unless otherwise a special operating condition is specified in the follows during the testing.

6.6 TEST RESULT

Temperature：	26℃	Relative Humidity：	54%
Test Mode ：	GFSK	Test Voltage ：	DC 3.0V

Test channel	-20dB Channel Bandwidth (MHz)	Result
Lowest	0.651	Pass
Middle	0.653	
Highest	0.703	

-20dB Bandwidth 2410MHz Ant1

-20dB Bandwidth 2442MHz Ant1

-20dB Bandwidth 2470MHz Ant1

8.ANTENNA REQUIREMENT

Standard requirement:	FCC Part15 C Section 15.203 /249(c)
15.203 requirement: An intentional radiator shall be designed to ensure that no antenna other than that furnished by the responsible party shall be used with the device. The use of a permanently attached antenna or of an antenna that uses a unique coupling to the intentional radiator, the manufacturer may design the unit so that a broken antenna can be replaced by the user, but the use of a standard antenna jack or electrical connector is prohibited. 15.247(c) (1)(i) requirement: (i) Systems operating in the 2400-2483.5 MHz band that is used exclusively for fixed. Point-to-point operations may employ transmitting antennas with directional gain greater than 6dBi provided the maximum conducted output power of the intentional radiator is reduced by 1 dB for every 3 dB that the directional gain of the antenna exceeds 6dBi.	
EUT Antenna:	
The antenna is a Wire antenna, the best case gain of the antenna is 0.12dBi, reference to the appendix II for details	

11. TEST SETUP PHOTO

Reference to the appendix I for details.

12. EUT CONSTRUCTIONAL DETAILS

Reference to the appendix II for details.

※※※※※ END OF REPORT ※※※※※