承 认 书

客户料号:

Free Wings P/N: _____

供应商名称: 深圳市迎丰天线技术有限公司

规格描述:

Description : _____

原厂型号: _____

包装方式及最小包装: _____

（以下必选一项，选择对应项目请将“□”涂黑色。）

■ 新品承认（Newly Approved）

□ 材料变更再承认（Material Approved）

□ 规格变更再承认（SPEC Approved）

环保要求：（每一项必选一项，选择对应项目请将“□”涂黑色。）

RoHS: □不要求 ■符合 EU RoHS □其它: _____

REACH: □不要求 ■符合 REACH

卤素限值: □不要求 ■IEC-61249-2-21 □其它: _____

出厂签章: 送样日期:

RD 研发部	PE 工程部	QA 质量部	SD 销售部	APPROVED BY 批 准

承认签章: 承认日期:

PD 采购部	RD 研发部	PE 工程部	QA 质量部

注：此承认书一式三份，按照左至右顺序签署。

1 份我司研发部存档，1 份我司质量部存档，1 份回签供应商。（承认书需附样品。）

Note: This specification should be admitted in three copies. One copy gives our engineering department filing; one copy gives our quality management department filing; one copy gives back to suppliers. (This specification should include a sample.)

公司地址：深圳市南山区西丽平山一路云谷二期 7 栋 412

电话：13530931724

传真:

邮箱：admin@yingfengtianxian.com

Add:

Tel:

Fax:

Http:

3.2 x 1.6 x 1.2 (mm) WiFi/Bluetooth Ceramic Chip Antenna (YF300F) Engineering Specification

1. Product Number

YF	3216	F5	R	2G4502
1	2	3	4	5

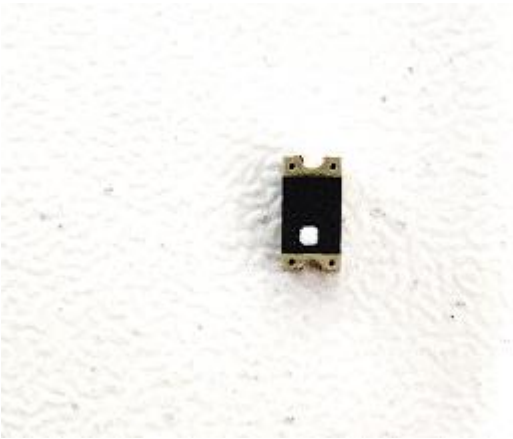

(1)Product Type	Chip Antenna
(2) Size Code	3.2x1.6mm
(3) Type Code	F5
(4) Packing	Tape and reel
(5) Frequency	2.45GHz

2. Features

*Stable and reliable in performances
*Low temperature coefficient of frequency
*Low profile, compact size
*RoHS compliance
*SMT processes compatible

3. Applications

*Bluetooth earphone systems
*Hand-held devices when WiFi /Bluetooth functions are needed, e.g., Smart phone.
*IEEE802.11 b/g/n
*ZigBee
*Wireless PCMCIA cards or USB dongle

4. Description

Ying feng chip antenna series are specially designed for WiFi/Bluetooth applications. Based on yingfeng proprietary design and processes, this chip antenna has excellent stability and sensitivity to consistently provide high signal reception efficiency.

5. Electrical Specifications (40 x 40 mm^2 ground plane)

5-1. Electrical Table

Characteristics		Specifications	Unit
Outline Dimensions		3.2x1.6x1.2	mm
Working Frequency		2400~2500	MHz
VSWR		2 Max.	
Impedance		50	Ω
Polarization		Linear Polarization	
Gain	Peak	2 (typical)	dBi
	Efficiency	75 (typical)	%

5-2. Return Loss & VSWR

Return Loss (S_{11})

Smith Chart(S_{11})

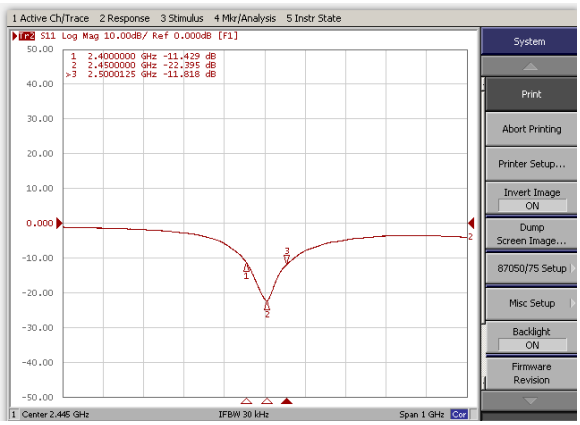

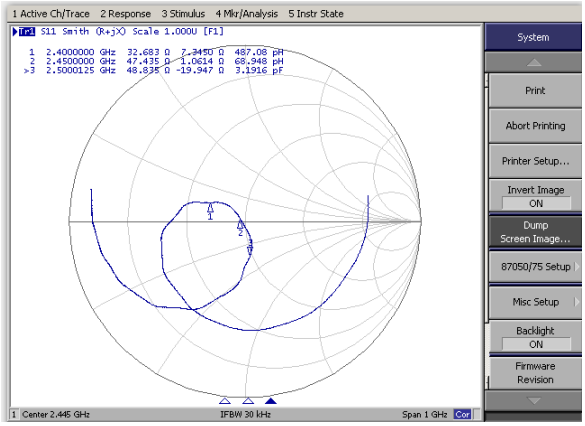

6 Outline Dimensions of Antenna & Evaluation Board (unit: mm)

6-1. Antenna Dimensions

Configuration and Dimensions:

Dimension and Terminal Configuration

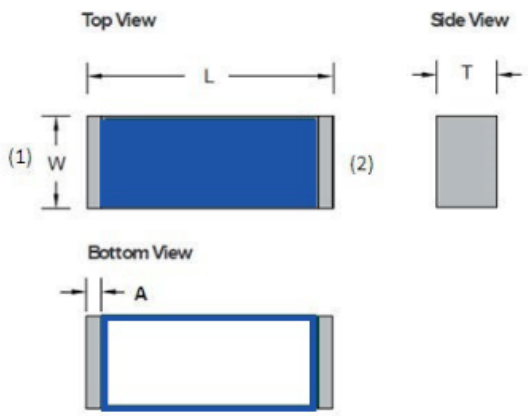

Dimension (mm)	
L	3.2 +-0.20
W	1.6+- 0.20
T	1.20+-0.20
A	0.20+-0.20

No.	Terminal Name
1	Feeding
2	Soldering

FootPrint (Unit : mm)

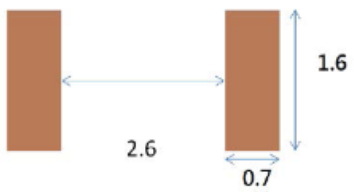

6-2-2. **Matching Circuit:**

With the following recommended values of matching and tuning components, the center frequencies will be about 2450 MHz at our standard 40x40 mm^2 evaluation board. However, these are reference values, may need to be changed when the circuit boards or part vendors are different.

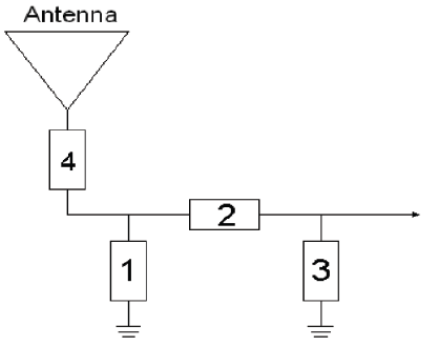

System Matching Circuit Component		
Location	Description	Vendor
1	N/A*	-
2	3.3nH, (0402)	DARFON
3	1.5pF, (0402)	MURATA
4	0Ω, (0402)	-

Evaluation Board Reference

PCB Dimension & Antenna Layout Reference

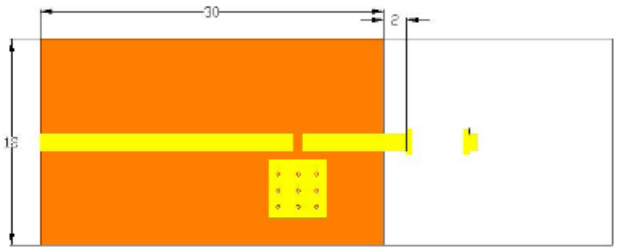

unit :mm

7.Radiation Pattern (40x 40 mm^2 ground plane)

7-1. 3D Gain Pattern @ 2450 MHz

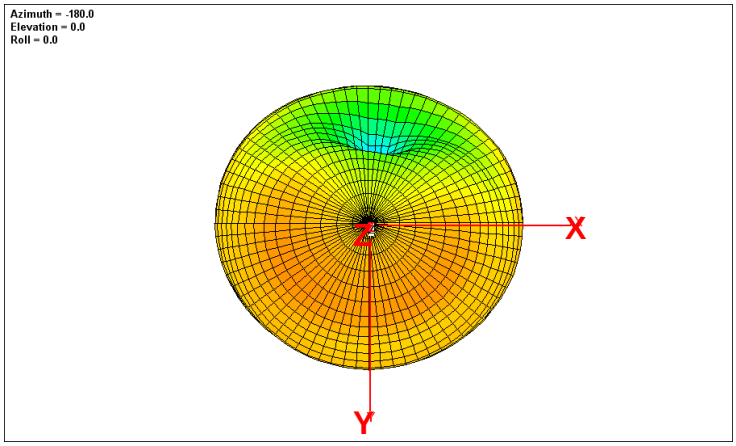

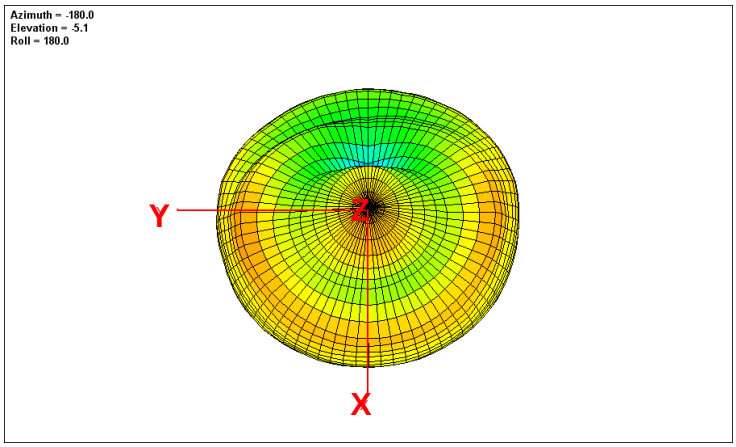

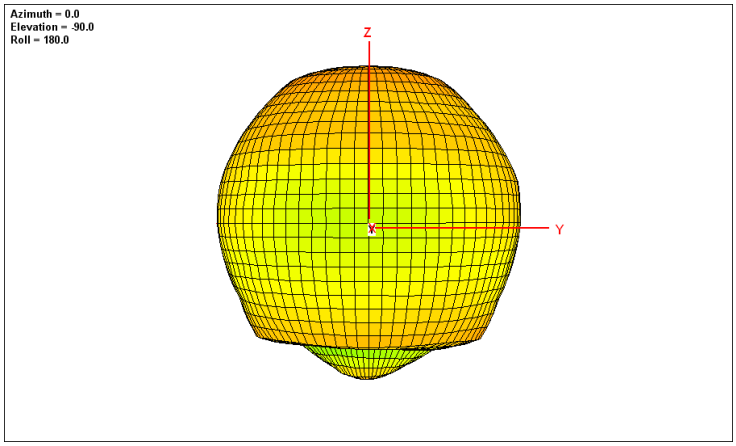

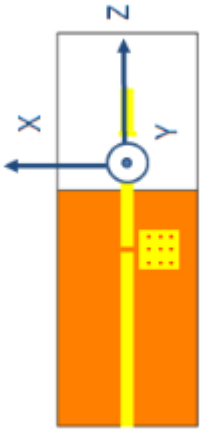

8. Radiation Pattern (On 100x55 mm ground plane)

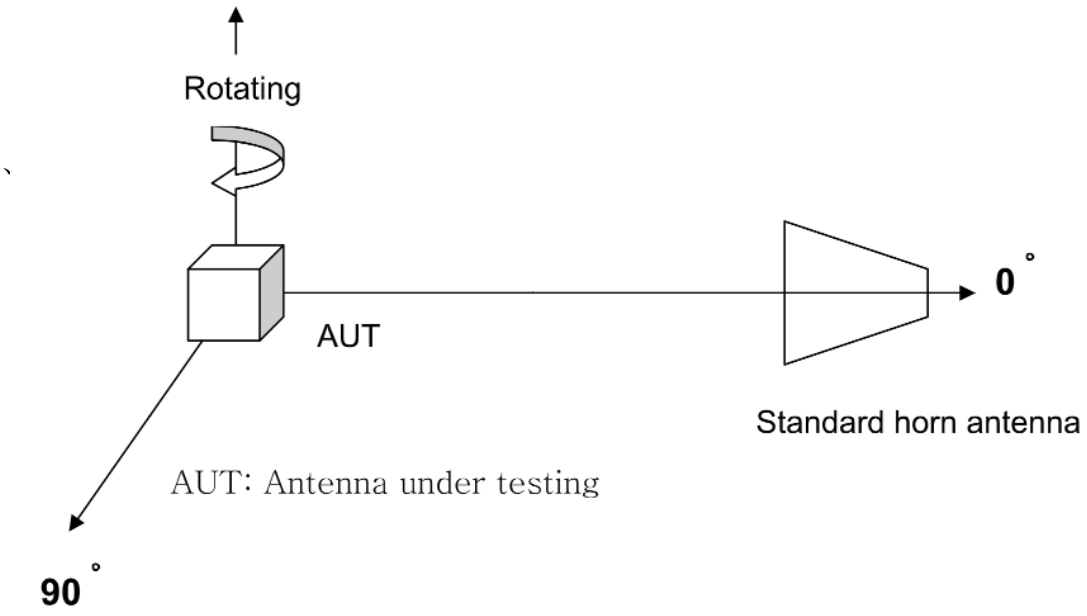

a. Type A

a. Type A

XZ

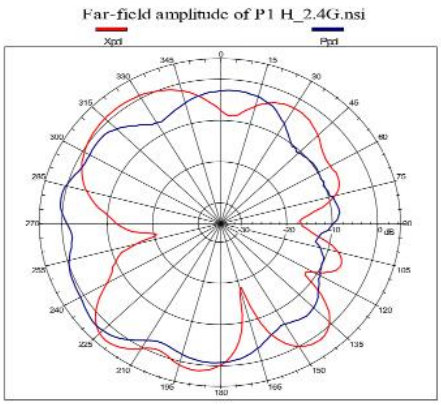

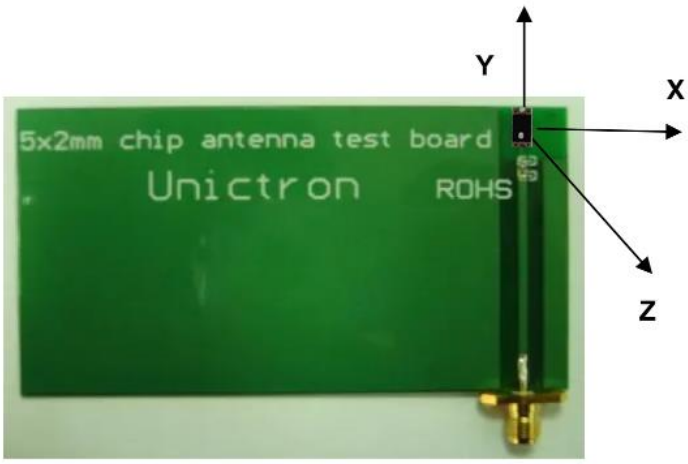

(Peak Gain =5.29 dBi, Average Gain -1.1dBi)

YZ

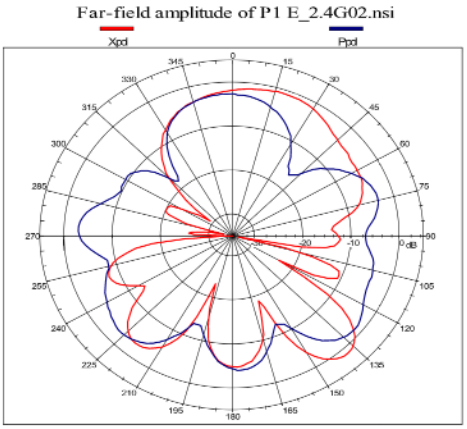

(Peak Gain =2.29 dBi, Average Gain -3.97dBi)

XY

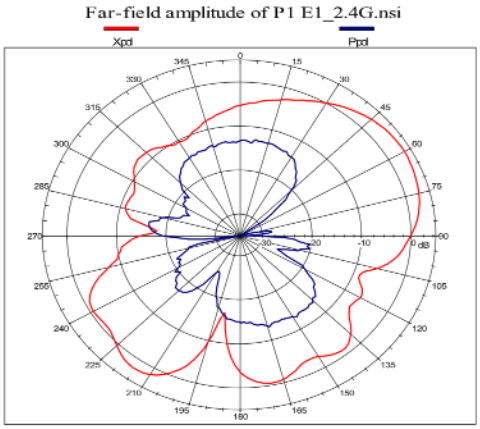

(Peak Gain =3.35 dBi, Average Gain -4.11dBi)

Source signal: Linearly polarized signal f_0= 2450 MHz

Taping Specifications

Reel

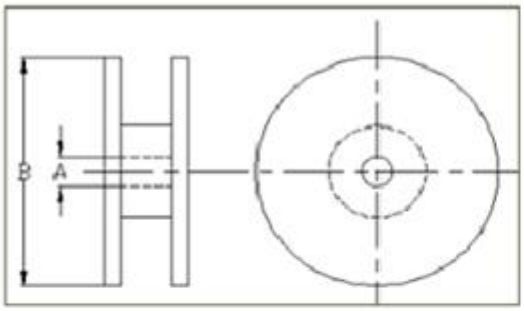

Checking note	Index	Spec (mm)
Internal diameter of reel	A	60.20 ± 0.50
External diameter of reel	B	178 ± 1.00

Quantity/per reel	3000 pcs
Tape material	Plastic (embossed)

Taping Blister Tape

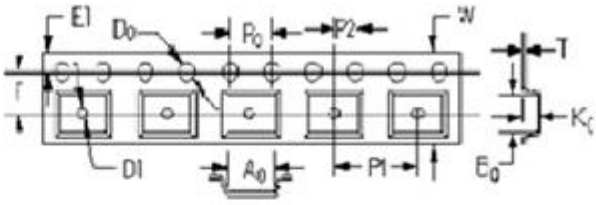

Checking note	Index	Spec (mm)
Sprocket hole	D0	1.50 +0.10/-0.00
Distance sprocket hole to outside	E1	1.75 ± 0.10
Distance sprocket hole to pocket	F	5.50 ± 0.05
Distance sprocket hole to sprocket hole	P0	4.00 ± 0.10
Distance pocket to pocket	P1	4.00 ± 0.10
Distance sprocket hole to pocket	P2	2.00 ± 0.05
Tape width	W	12.00 +0.30/-0.10
Pocket width nominal clearance	A0	2.28 ± 0.13
Pocket length nominal clearance	B0	5.70 ± 0.13
Pocket depth minimum clearance	K0	1.58 ± 0.10
Thickness of tape	T	0.23 ± 0.02

Reliability Table

Test Item	Procedure	Requirements Ceramic Type	Remark (Reference)
Electrical Characterization		Fulfill the electrical specification	User Spec.
Thermal Shock	1. Preconditioning: 50 ± 10℃ / 1 hr , then keep for 24 ± 1 hrs at room temp. 2. Initial measure: Spec: refer Initial spec. 3. Rapid change of temperature test: -30℃ to +85℃; 100 cycles; 15 minutes at Lower category temperature; 15 minutes at Upper category temperature.	No Visible Damage. Fulfill the electrical specification.	MIL-STD-202 107
Temperature Cycling	1. Initial measure: Spec: refer Initial spec. 2. 100 Cycles (-30℃ to +85℃), Soak Mode=1 (2 Cycle/hours). 3. Measurement at 24 ± 2Hours after test condition.	No Visible Damage. Fulfill the electrical specification.	JESD22 JA104
High Temperature Exposure	1. Initial measure: Spec: refer Initial spec. 2. Unpowered; 500hours @ T=+85℃. 3. Measurement at 24 ± 2 hours after test.	No Visible Damage. Fulfill the electrical specification.	MIL-STD-202 108
Low Temperature Storage	1. Initial measure: Spec: refer Initial spec. 2. Unpowered: 500hours @ T= -30℃. 3. Measurement at 24 ± 2 hours after test.	No Visible Damage. Fulfill the electrical specification.	MIL-STD-202 108
Solderability (SMD Bottom Side)	Dipping method: a. Temperature: 235 ± 5°C b. Dipping time: 3 ± 0.5s	The solder should cover over 95% of the critical area of bottom side.	IEC 60384-21/22 4.10
Soldering Heat Resistance (RSH)	Preheating temperature: 150 ± 10°C. Preheating time: 1~2 min. Solder temperature: 260 ± 5°C. Dipping time: 5 ± 0.5s	No Visible Damage.	IEC 60384-21/22 4.10
Vibration	5g's for 20 min., 12 cycles each of 3 orientations Note: Use 8"X5" PCB .031" thick 7 secure points on, one long side and 2 secure points at corners of opposite sides. Parts mounted within 2" from any secure point. Test from 10-2000 Hz.	No Visible Damage.	MIL-STD-202 Method 204
Mechanical Shock	Three shocks in each direction shall be applied along the three mutually perpendicular axes of the test specimen (18 shocks) Peak value: 1,500g's Duration: 0.5ms Velocity change: 15.4 ft/s Waveform: Half-sine	No Visible Damage.	MIL-STD-202 Method 213
Humidity Bias	1. Humidity: 85% R.H., Temperature: 85 ± 2 °C. 2. Time: 500 ± 24 hours. 3. Measurement at 24 ± 2hrs after test condition.	No Visible Damage. Fulfill the electrical specification.	MIL-STD-202 Method 106

Board Flex (SMD)	1. Mounting method: IR-Reflow. PCB Size (L:100 × W:40 × T:1.6mm) 2. Apply the load in direction of the arrow until bending reaches 2 mm. 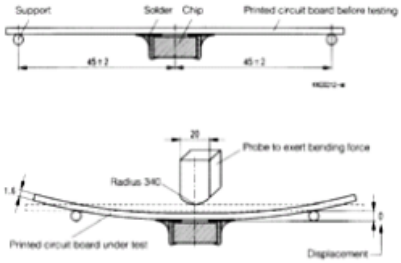	No Visible Damage.	AEC-Q200 005
Adhesion	Force of 1.8Kg for 60 seconds. 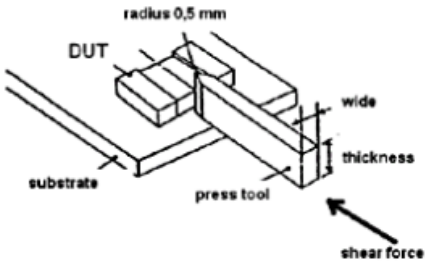	No Visible Damage Magnification of 20X or greater may be employed for inspection of the mechanical integrity of the device body terminals and body/terminal junction.	AEC-Q200 006
Physical Dimension	Any applicable method using x10 magnification, micrometers, calipers, gauges, contour projectors, or other measuring equipment, capable of determining the actual specimen dimensions.	In accordance with specification.	JESD22 JB100