Hd outdoor sports camera Instruction manual

4K

H.265

It's ultra-slim and has an integrated look design. This product can be used for a wide range of purposes and it's an essential recording medium for vehicle datarecording, mountain climbing, skiing,cycling, parachuting, diving, fishing, hunting, and other fields. This manual explains how to use this video camera in detail, and it provides you with detailed information on the use, operation, safety precautions as well as technical specifications of this product. Please read this manual carefully before using the camera and keep it properly for your reference.We sincerely hope that this product will meet your requirements and serve you for a long time.

Product overview:

This product is a high definition digital video recording device with mini size and waterproof, tailored to market demand. It has a variety of industry-leading features including digital video recording,
photo-shooting, high-speed USB data transmission,
allowing you to record your happy life at anytime anywhere.

I.Product features:

- Super mini portable size, easy to carry
- 18mega pixels high definition wide-angle lens
- Life waterproof function
- Built in 1600Mah Lithium battery
- Video recording while charging
- Automatic cycle cover record
- Support high capacity Micro TF card
- PC webcam
- Built-in vibrating motor
- HD Video stabilization.
- With gyroscope function
- With WIFI function, it can connect to the mobile phone to watch

Note:

1.It supports video recording while charging

2.Suggest to choose 4K resolution player device when playing

3.When using TF card more than 32GB , there is no other data in the card to avoid lost the data.

II.Product main structure：

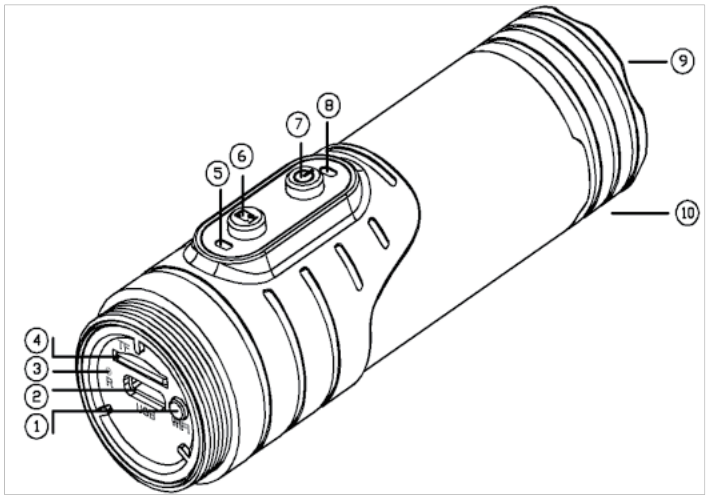

1. WIFI button 2.type-c 3. Reset button 4.TF card slot
5. Video/Photo indicator 6. Video/Photo button 7. Power/Switch button
8. WIFI/Charging indicator 9. Camera 10. Mic

III. Mobile App installation connection:

1. Download and install Viidure APP.
a. IOS is downloaded from the Apple Store by searching Viidure.
b. For foreign android systems, searching Viidure on GooglePlay to download.
c. For Chinese android systems, downloading Viidure from the app store and install it.

2. Long press the power button for about 5 seconds, the product vibrates once, the green light is always on, and the camera enters the standby mode. Then long press the WIFI button, it switches to WIFI mode. Meanwhile, the yellow light flashes slowly, waiting for connection.

3. Enter the mobile phone WIFI settings to connect to the WIFI name CAMH68, the password is 12345678.After the WIFI connection is successful, the yellow light is always on, open the APP and click the camera icon in the middle to enter the operation of the camera.

IV. Video and photo operation:

1. Long press the power button for about 5 seconds, the product vibrates once, the green light is always on, the camera is on standby state, short press the video button once, the product vibrates once, the green light flashes slowly to start recording. Short press the video button once and vibrate once to stop the video and save the document.

2. When the camera is in standby state, short press the power button once, after vibrating twice, the blue light is on, means it switches into the photo mode, short press the Photo button once to vibrate once, and the blue light flashes once to complete one photo.

3. There will be 2 continuous vibration when switching video and photo mode, the video mode is green light, and the photo mode is blue light.

4. Long press the power button for about 5 seconds,vibrate once and light goes off then shut down.

5. In standby state, the camera will automatically shut down without any operation within 2 minutes.

V. Use method:

1. U-disk / webcam mode After connecting the computer with the data cable, you can play the video files in the MICRO SD and delete unnecessary files.

2. Without TF card inserted, when connecting to the computer, it can be used as a webcam.

3. Video recording while charging mode: connect the power supply or car charging source, will automatically turn on, short press the video button to start recording,

Note:
When using recording while charging mode, please shut down and save the file before quitting USB. Otherwise, the video file will not be saved.

4.Battery charging: the red light is on when charging, the red light is out after being fully charged.

VI. Inserting and removing Micro SD card:

1. Insert the Micro SD card into the card slot as indicated until it's fixed.

2. Press down the Micro SD card and wait until it pops out.then remove the card.

Cautions:

1. Please insert the card in the right direction into the device to avoid damage.

2.If the card is incompatible with the device,Please insert it again or try a new card.

3.Please use a genuine C10 class high-speed card.

VII. Time Setting:

Time display is default for this product. Follow the instructions as below to modify.If the user needs to modify the time displayed on the camera. After connecting the camera to the computer, open the root directory, thereis a time document file in it, edit in the document. Format: year.month.day hour:minute:second Y 3 (eg 2023-06-01 18:58:58 Y 3)Save and exit the file, the time modification is now completed.And time will be displayed next time when you turn on the camera.

Note:

"Y" represents time display "N" means no time display

"3" means the loop video recording and every 3 minutes to save a file. (can be set up for 1 to 9 minutes, not in this range, the camera loop in 3 minutes by default.)

VIII.Reset:

Under the product is crashed and can't work normally, please short press the reset button to restart automatically.

IX. Technical Specifications:

Lens	1800万
Video Resolution	3840*2160
Video code	H.265
Video Format	MP4
Picture resolution	5376*3024
Picture Format	JPG
Memory Card	MICRO SD
USB	type-c
Battery capacit	1600mAh
battery	5V / 2A

FCC Requirement

changes or modifications not expressly approved by the party responsible for compliance could void the user’ s authority to operate the equipment.

This device complies with Part 15 of the FCC Rules. Operation is subject to the following two conditions:

(1) this device may not cause harmful interference, and

(2) this device must accept any interference received, including interference that may cause undesired operation.

Note: This equipment has been tested and found to comply with the limits for a Class B digital device, pursuant to Part 15 of the FCC Rules. These limits are designed to provide reasonable protection against harmful interference in a residential installation. This equipment generates, uses, and can radiate radio frequency energy, and if not installed and used in accordance with the instructions, may cause harmful interference to radio communications. However, there is no guarantee that interference will not occur in a particular installation. If this equipment does cause harmful interference to radio or television reception, which can be determined by turning the equipment off and on, the user is encouraged to try to correct the interference by one or more of the following measures:

– Reorient or relocate the receiving antenna.

– Increase the separation between the equipment and receiver.

– Connect the equipment into an outlet on a circuit different from that to which the receiver is connected.

– Consult the dealer or an experienced radio/TV technician for help.