User Manual

M300/400/500-S-NA

MICRO INVERTER

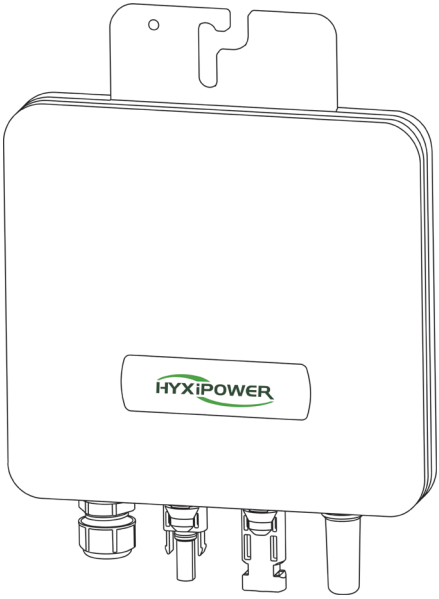

Carefully read this inverter user instructions before using.
Read and save these instructions.

© 2023 ZHEJIANG HYXI TECHNOLOGY CO., LTD. All rights reserved.

This document cannot be copied fully or partially, transferred, or distributed in any form without the prior written permission of ZHEJIANG HYXI TECHNOLOGY CO., LTD (hereinafter referred to as "HYXIPOWER").

TRADEMARKS

and other HYXIPOWER trademarks are the trademarks or registered trademarks of HYXIPOWER All other trademarks mentioned herein are the properties of their respective owners.

Contents

1. Safety Instructions 1
1.1 Safety Instruction 1
1.2 Symbol Description 2
1.2.1 Symbols Used in the Manual 2
1.2.2 Other Symbols 2
1.3 Radio Wave Interference Statement 2
2. Product Introduction 4
2.1 Photovoltaic On-Grid System 4
2.2 Microinverter 4
2.3 1-in-1 Microinverter System 5
2.4 Communication Technology 5
2.5 Product Features 6
2.6 Inverter Size and Termnial Instruction 6
3. Installation 7
3.1 Mircoinverter System Installation Accessories 7
3.2 Customer Needs to Provide Tools 7
3.3 Installation Procedures 8
3.3.1 How to Make a T-Junction Bus 8
3.3.2 Microinverter Installation 9
3.3.3 Connect Microinverter with T-junction 10
3.3.4 Connect PV module 10
3.3.5 Draw Installation Map 11
3.3.6 Operate and Power On 11
4. Fault Clearance 12
4.1 Status indication and error reporting 12
4.1.1 Start indicator 12
4.1.2 Operating indicator 12
4.1.3 Alarm Troubleshooting 12
4.1.4 On-Site Inspection (qualified installers only) 15
5. Maintenance Guide 16
5.1 Routine maintenance 16
5.2 Microinverter Replacement 16
5.3 Storage and transport 16
5.4 End-of-life Disposal 17

6. Human-Computer Interaction 18
6.1 Installing the App 18
6.2 APP User manual 18
6.3 System debugging 18
7. Appendix 19
7.1 Technical Specifications 19
7.2 Wiring Diagram 20
7.3 Installation Map 21
7.4 Contact Information 22

1. Safety Instructions

HYX-M300-S, HYX-M400-S, HYX-M500-S series microinverters can efficiently convert direct current into alternating current that meets the requirements of the power grid and feed the power into the power grid. They are designed and tested in strict accordance with relevant national safety standards.

The installation, trial operation, operation and maintenance of the inverter must comply with relevant safety regulations. Incorrect operation or use will endanger:

- Life and personal safety of operators or third parties.
- Other property of the operators or third parties.

Important Safeguards and Warnings

To ensure the installation and operation safety of inverter and reduce the risk of electric shock, this manual uses the following safety symbols to mark some danger indications and safety precautions. Safeguards and Warnings in the specific operation process will also be explained in detail in the corresponding chapters.

This manual contains important instructions to be followed when installing and maintaining the Microinverter. Users should read this manual thoroughly before installing or debugging the Microinverter.

For safety, the technicians responsible for the installation, operation and maintenance of this Microinverter must have corresponding qualifications, received relevant training and master relevant skills. Installation, operation and maintenance must strictly follow the instructions contained in this manual.

1.1 Safety Instruction

- Only qualified professionals can install and replace the microinverter.
- The electrical installation of Microinverter must comply with local electrical regulations.
- Read all instructions and warning signs in this manual before installing and using the microinverter.
- To avoid scalding, do not directly contact the shell of the microinverter, and the shell temperature can reach 80 °C .
- Before disconnecting the Microinverter from the solar module, the AC side power grid must be disconnected first.
- If the microinverter does not work normally, contact after sales services of HYXIPOWER. Unauthorized destruction or opening of the microinverter will not be covered by warranty.

1.2 Symbol Description

1.2.1 Symbols Used in the Manual

⚠ DANGER

- Indicates dangerous conditions that might cause fatal electric shock risk, serious personal injury or fire.

⚠ CAUTION

- To avoid potential safety hazards, the corresponding instructions must be strictly followed.

NOTICE

- This operation is prohibited, and relevant personnel should stop the operation.

1.2.2 Other Symbols

Symbol	Description
	Caution When the device is running, do not step within 0.2 m of its periphery.
	High Voltage The high voltage generated by Microinverter can endanger life.
	High Temperature The microinverter will generate heat during operation. Do not touch the metal surface.
	Reading Manual Read the user's manual carefully before installation, operation and maintenance.
	CE The Microinverter meets EU low voltage standard.
	Discarding Do not treat the microinverter as domestic garbage.

1.3 Radio Wave Interference Statement

After testing, this microinverter meets the requirements of CE and EMC and is free from electromagnetic interference. This product might cause electromagnetic interference if it is improperly installed.

You can turn off the Microinverter and then start it again to detect whether the radio is interfered by the inverter. If the inverter interferes with radio, take the following measures to eliminate the influence:

- Relocate the receiving antenna away from other devices.
- ncrease the distance between the microinverter and the antenna.
- Use metal or concrete materials to separate the Microinverter from the antenna.
- Consult a local supplier or skilled radio technician.

2. Product Introduction

2.1 Photovoltaic On-Grid System

The on-grid system diagram of HYX-M500-S series microinverter is as follows:

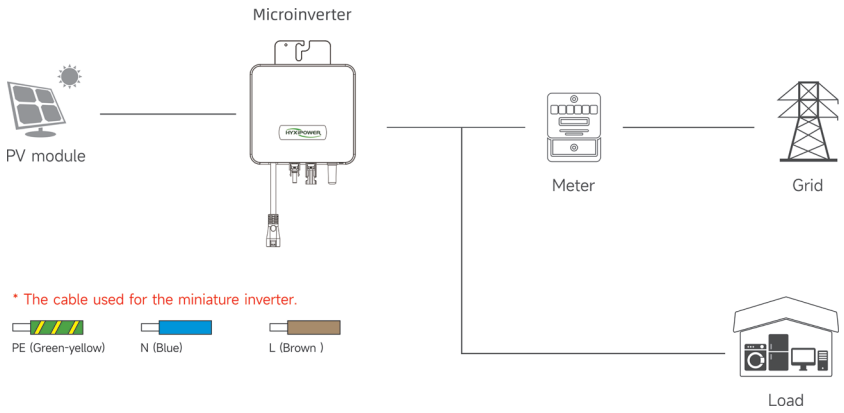

2.2 Microinverter

HYX-M300-S, HYX-M400-S, HYX-M500-S series are 1-in-1 microinverters, which can connect one photovoltaic module. They are module-level photovoltaic inverters with module-level monitoring function.

The whole system consists of two parts, photovoltaic on-grid power generation system and photovoltaic monitoring system. photovoltaic on-grid power generation system includes photovoltaic modules, Data Management Unit(DMU) , microinverter AC cable and other accessories. microinverter is the core product of photovoltaic power generation system, and it has independent maximum power point tracking (MPPT) control, which can maximize the energy output of the whole solar array and maximize the power generation performance of photovoltaic system no matter how the array is arranged or when it encounters unsatisfactory conditions such as shadow occlusion, dirt accumulation, illumination deviation or mismatch in practical application.

In addition, microinverters do not require the consistency of photovoltaic modules like central and series inverters. Each microinverter transformer can be easily mounted on the rack below the panel. The panel-side low-voltage DC line can be directly connected to the microinverter, eliminating the danger of high-voltage DC voltage.

Data Management Unit(DMU) :

Microinverter system power generation information transfer station, which communicates with the microinverter through the Sub-1G communication module, collects real-time operating data of the microinverter, and transmits the collected operating data of the microinverter through various communication methods to the Hyxipower monitoring service system.

Remote monitoring platform:

The operating data and working status of the inverter are transmitted through the wireless router, and the user is provided with module-level monitoring through the Web or App application to realize remote operation and maintenance.

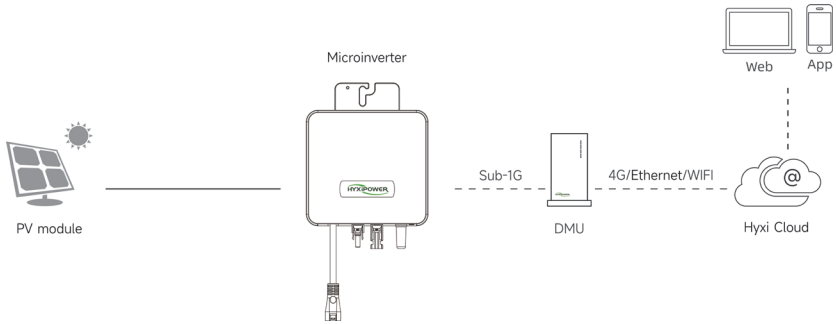

2.3 1-in-1 Microinverter System

The DC side can choose a micro-inverter series according to the number of connected photovoltaic modules. As shown below:

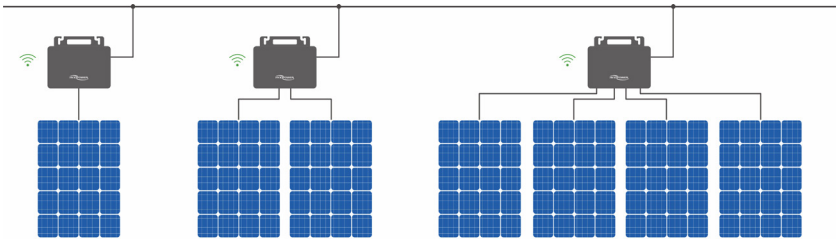

1-in-1 2-in-1 4-in-1

This manual mainly introduces Hyxipower 1-in-1 Microinverter series.

This series of HYX-M500-S has outstanding performance in 1-in-1 series, with an output power up to 500VA. Each micro-inverter can be connected to one photovoltaic module. It has independent MPPT and module-level data monitoring functions, high power generation, easy and convenient maintenance features.

2.4 Communication Technology

1-in-1 Sub-1G version series microinverters adopt a new Sub-1GHz wireless communication solution.

Sub-1GHz communication scheme:

The technology has a long transmission distance and stronger anti-interference, and operates in the 868 MHz or 433 MHz frequency band.

2.5 Product Features

- Maximum output power 500W.
- Module-level MPPT, the peak conversion efficiency reaches 96.7%.
- IP67 enclosure, 6000V surge protection for higher reliability.

2.6 Inverter Size and Termnial Instruction

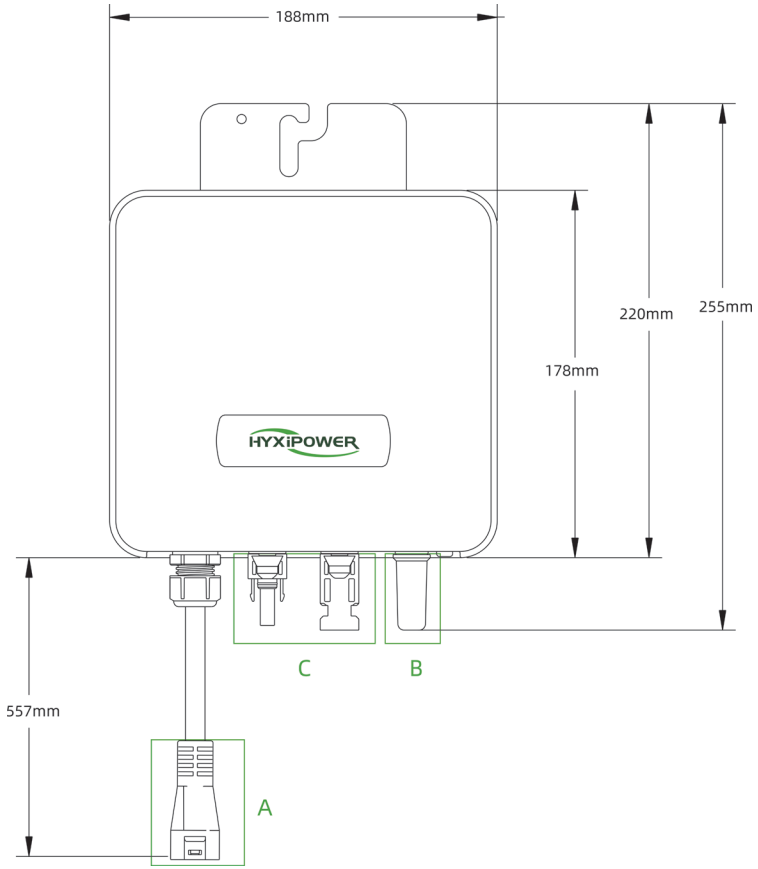

A: AC Branch Connector B: Antenna C: DC terminal

3. Installation

Each microinverter is installed on a mount just below the solar module panel.

The low-voltage DC line on the panel side of the solar module can be directly connected to the Microinverter, but it must be protected from direct sunlight, rain, snow, ultraviolet rays, etc.

A clearance of at least 20mm should be left around the microinverter enclosure to ensure ventilation and heat dissipation.

⚠ CAUTION

- The instructions in the manual must be followed when moving and placing the device.
- Mishandling of equipment may result in minor, serious injury or contusion.
- The cooling fins of the device must be left uncovered to ensure sufficient internal cooling of the device.

3.1 Mircoinverter System Installation Accessories

Image	Description
	T-junction cable
	M8*25 bolt (Self preparation)
	T-junction bus connector

Image	Description
	T-junction bus end plug
	T-junction removal tool
	T-junction branch line port protection cover

*The above accessories are not included in the product package and need to be purchased separately.

3.2 Customer Needs to Provide Tools

Wire stripper

Wire nippers

Screwdriver

Multimeter

Marker

Cable tie

Dust mask

Goggles

Safety shoes

Safety gloves

Tape measure

Hexagon wrench

3.3 Installation Procedures

3.3.1 How to Make a T-Junction Bus

- Step 1: Prepare several sections of T-junction connecting wires according to the number of microinverters to be installed on site.
- Step 2: Removing the T-junction cable at the end.

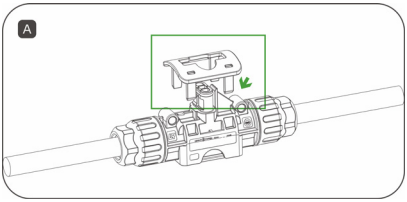

Use the T-knot removal tool to remove the lower cover.

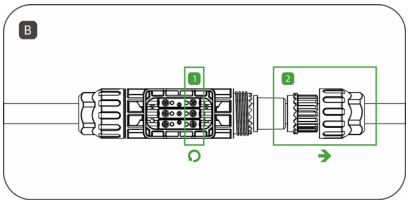

Loosen the inner screw, unscrew the nut, and remove the cable.

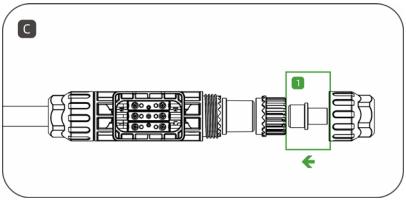

Install a T-junction bus end plug at the end of the T-junction.

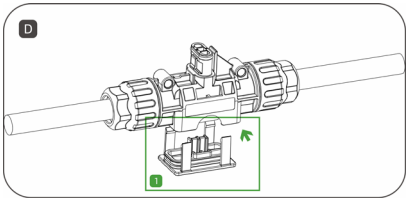

Insert the lower T-junction cover back into place and make sure it is secure.

- Step 3: T-junction and bus connection

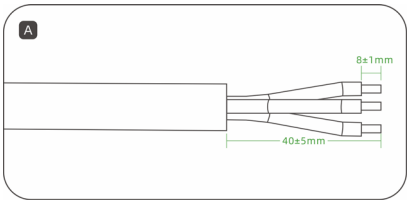

Prepare the AC cable by stripping the ends.

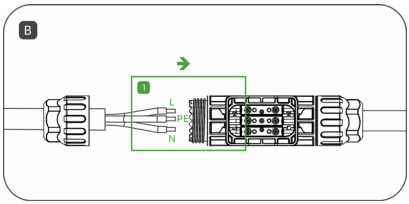

Insert the AC cable into the T-junction connector at the correct hole position.

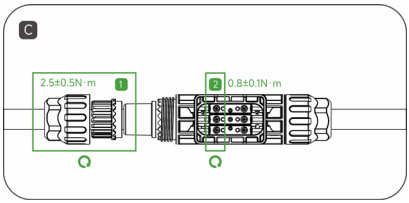

Tighten the screws, and then the nuts.

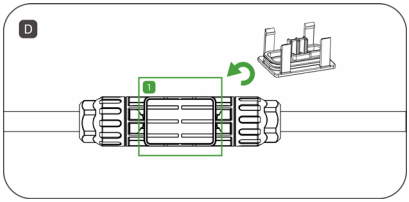

Insert the lower T-junction cover back into place, making sure it is secure.

- Step 4: Secure the T-junction cable
  Put the T-junction connecting wire on the guide rail and fix it with cable tie.

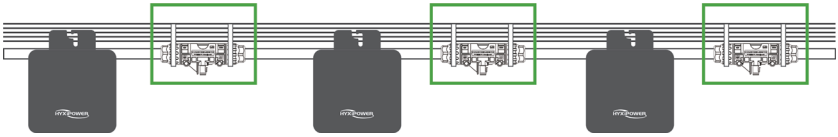

⚠ CAUTION

- Nut tightening torque: 2.5±0.5N·m, Screw tightening torque: 0.8±0.1N·m, Do not over-tighten, Do not damage the sealing ring in the T-junction connector during assembly and disassembly.
- Do not contact T-junction bus connectors with water directly.
- Use a professional tool to uninstall the T-junction bus connector.

3.3.2 Microinverter Installation

- Step 1: Mark the installation position of the Microinverter on the bracket According to the layout of the photovoltaic modules.
- Step 2: Fix the Microinverter on the bracket with M8*25 screw, then lock the screw. (* The inverter indicator panel should face the bracket)

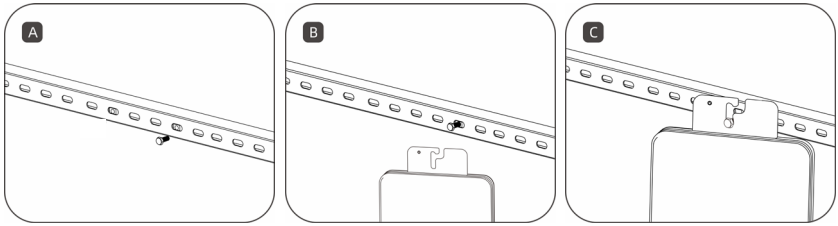

⚠ CAUTION

- Install the microinverter and all DC connections under the PV module to avoid direct sunlight, rain and snow, etc.
- Leave ≥ 20mm space between Microinverter and PV module for Ventilation and heat dissipation.
- Screw tightening torque: 9N·m, Do not over-tighten.
- Do not carry AC cables during transportation.

3.3.3 Connect Microinverter with T-junction

Insert the output AC feeder connector of the microinverter into the T-junction bus connector until hearing a "click" sound. Ensure that the installation is tight.

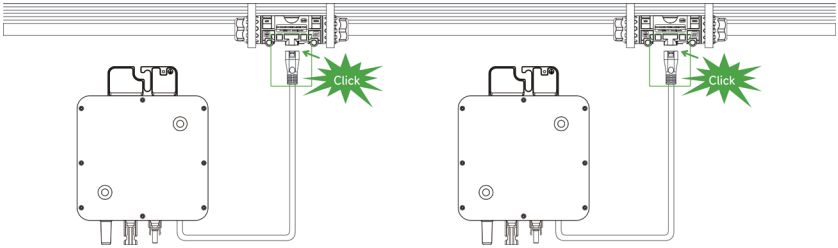

3.3.4 Connect PV module

- Step 1: Install the PV module above the microinverter.
- Step 2: Connect the DC output cable of the PV module with the input side of the microinverter.

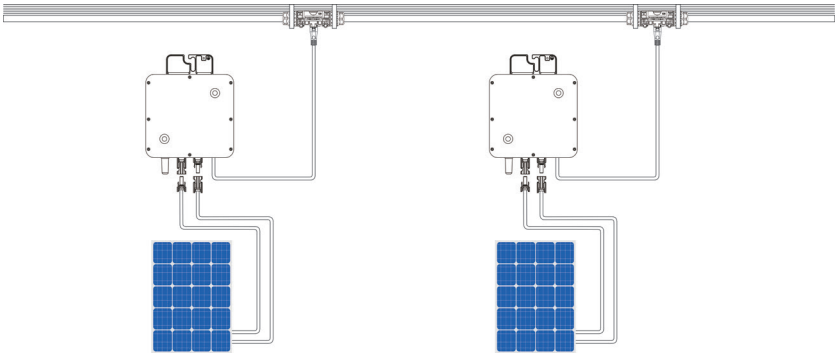

⚠ CAUTION

- Ensure that the output current and voltage of the PV modules are consistent with the inverter.
- Operating DC voltage range of the PV module must be within the input voltage range of the microinverter.
- The maximum Voc of the PV module shall not exceed the maximum input voltage of the microinverter .
- DC output power of PV module shall not exceed 1.5 times that of the AC output power of the microinverter.

3.3.5 Draw Installation Map

Tear off the serial number label of Microinverter and affix serial number label on the corresponding position according to the installation map for quick identification during maintenance.

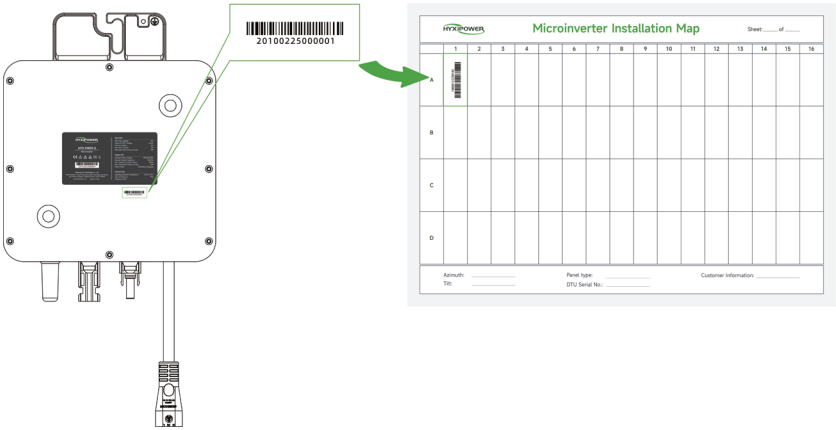

3.3.6 Operate and Power On

- Step 1: Close the main Grid circuit breaker.
- Step 2: Close the AC circuit breaker of each microinverter branch, and the system will automatically generate power after about 2 minutes.
- Step 3: Set up monitoring system on Hyxipower Smart PV Cloud Platform.

4. Fault Clearance

Only qualified professionals can implement the following troubleshooting operations when the microinverter solar system is not working properly.

4.1 Status indication and error reporting

4.1.1 Start indicator

When the DC side of the microinverter is powered on for the first time :

- The green lights blinks briefly indicates startup success.
- The red lights blinks briefly indicates startup failure.

4.1.2 Operating indicator

Light	Status	Meaning
Green	Fast flashes (1s gap)	Normal
	Slow flashes (3s gap)	Communication Fault
	Slow flashes (5s gap)	PV input fault

Light	Status	Meaning
Red	Light on	Ground fault
	Fast flashes (1s gap)	Fault
	Fast flashes (2s gap)	AC fault

4.1.3 Alarm Troubleshooting

Fault code	Fault description	Solution
3073	PLL Phase lock	1. It may be a short-time grid abnormality when occurs occasionally. It will resume work without manual intervention after the grid is normal. 2. Check AC connection when the fault occurs frequently. 3. Contact the distributor if the cable connection and power grid are normal.
3074 3075	PV1-PV4 Circuit undervoltage PV1-PV4 Circuit overvoltage	1. If the input voltage is too high, ensure that the input voltage of PV module is not higher than the maximum input voltage of the Microinverter. 2. If the input voltage is low or zero, ensure that the component is properly connected. 3. Contact the distributor If the component voltage is within the normal range.
3076	PV1-PV4 over-current	1. If the input current is too high, ensure that the input voltage of PV module is not higher than the maximum input voltage of the Microinverter. 2. Contact the distributor If the component voltage is within the normal range.

Fault code	Fault description	Solution
3091 3092	PV-1 & PV-2 terminal connection fault PV-3 & PV-4 terminal connection fault	1. Check if the terminal connect to the PV module. 2. Check if the port is properly connected if connection is fine.
3082	Island protection	1. Occasionally, it may be a short-term power grid abnormality. When the power grid is normal, it will resume work without manual intervention. 2. If all the microinverters in the power station have frequent islanding alarms, please contact the power bureau to confirm whether there is indeed an islanding phenomenon and solve it. 3. If the problem still cannot be solved, please try to contact the equipment manufacturer or dealer.
3083	Insultation resistance	1. Check whether the wiring on the input side of the microinverter is normal. 2. Check whether the modules (junction box) are normal.
3084	Device overheating	1. Check whether the ambient temperature of the microinverter exceeds the maximum allowable temperature. 2. If the ambient temperature exceeds the allowable temperature, please improve the installation environment. If the environment is normal, please contact the dealer or equipment manufacturer.
3086	The grid voltage fluctuates too much instantaneously	1. Occasionally, it may be a short-term power grid abnormality. When the power grid is normal, it will resume work without manual intervention. 2. If it occurs frequently, please confirm whether the grid voltage is normal. If the whole station alarms, please contact the local power bureau to solve the problem or adjust the instantaneous fluctuation limit of the grid voltage through the monitoring platform after obtaining the consent of the power bureau.
3087 3088 3090	EEPROM data corruption EEPROM data corruption Flash data corruption	1. Occasionally, and the microinverter works normally without manual intervention. 2. It keeps appearing and cannot be recovered, the Microinverter cannot work normally, Please contact your dealer or device.

Fault code	Fault description	Solution
3097	PV1-PV4 Primary side hardware overcurrent	1. If the input DC current is too high, please ensure that the input photovoltaic module current is not higher than the maximum input current of the microinverter. 2. If the module current is within the normal range for three days and the microinverter does not work, please contact the dealer or equipment manufacturer.
3098 3099 3100	PV1-PV4 absorption capacity overvoltage Inverter bridge 1 hardware overcurrent Inverter bridge 2 hardware overcurrent	1. If the input DC voltage is too high, please ensure that the input photovoltaic module voltage flow is not higher than the maximum input voltage of the microinverter. 2. If the module voltage is within the normal range for three days and the microinverter does not work, please contact the dealer or equipment manufacturer.
3094	Remote shutdown	1. Confirm whether the anti-backflow is enabled. 2. If the anti-backflow is not enabled, please contact the dealer or equipment manufacturer.
/	Firmware error	1. Please confirm whether the upgraded firmware is correct, and re-upgrade. 2. Please confirm whether the communication between DMU and platform, DMU and microinverter is normal, and then upgrade. 3. If the fault still exists, please contact the equipment manufacturer or dealer.
/	Low power generation	1. If it occurs occasionally, it may be a short-term power grid abnormality. When the power grid is normal, it will resume work without manual intervention. 2. If all the microinverters in the power station have frequent islanding alarms, please contact the power bureau to confirm whether there is indeed an islanding phenomenon and solve it. 3. If the problem still cannot be solved, please try to contact the equipment manufacturer or dealer.

4.1.4 On-Site Inspection (qualified installers only)

If the microinverter fails, please troubleshoot according to the following steps:

- Step 1: Verify whether the grid voltage and frequency are within the range specified in the technical parameter table of the user manual.
- Step 2: Check the connection to the grid. Disconnect the AC side first, then the DC side. When the inverter is still working, it is forbidden to disconnect its DC side connection. Reconnect the DC side and observe whether the indicator light flashes green briefly five times.
- Step 3: Check the connection of each microinverter in the AC branch, and confirm whether each Microinverter is powered by the public grid.
- Step 4: Make sure that each AC circuit breaker is functioning normally and is in a closed state.
- Step 5: Check the connection between the Microinverter and the DC side of the solar module.
- Step 6: Verify whether the DC voltage of the solar module is within the range specified in the technical parameter table of the user manual.
- Step 7: If the problem persists, please call Hyxipower's customer support number.

Precautions for routine maintenance:

⚠ DANGER

- Do not attempt to repair the microinverter, if troubleshooting fails, return it to the factory for a replacement.
- Do not disassemble and repair the microinverter by yourself ! In order to ensure safety and insulation performance, users are prohibited from repairing internal parts.

⚠ CAUTION

- Do not replace the AC input harness (AC tap cable on the microinverter). If the wire is damaged, the equipment should be scrapped.
- Unless otherwise specified, the connection between the equipment and the power grid (disconnect the power switch) must be cut off during maintenance, while shielding or isolating photovoltaic modules.
- Do not use rags made of filamentous or corrosive materials to clean the equipment, otherwise it may cause corrosion or generate static electricity.
- Do not repair the product without authorization. Qualified parts must be used for maintenance.

ⓘ NOTICE

- Each branch line should be equipped with a circuit breaker.

5. Maintenance Guide

5.1 Routine maintenance

1. Only authorized personnel are allowed to perform maintenance operations and are responsible for reporting abnormal conditions.

2. Wear personal protective equipment for maintenance operations.

3. In normal operation, check the environment. Make sure that the environment does not meet the normal working requirements of the Microinverter due to time changes, and ensure that the microinverter is not exposed to harsh weather and is not covered by foreign objects.

4. Do not disassemble the micro-inverter or open the case for maintenance. In order to ensure safety and insulation integrity, the design of the Microinverter does not allow the case to be opened for maintenance.

5.2 Microinverter Replacement

Replacement of miniature inverter The following steps shall be followed when replacing the failed miniature inverter converter on site:

- Step 1: Disconnect the power supply of the branch circuit AC side circuit breaker.
- Step 2: Disconnect the AC bus from the AC connector of the inverter.
- Step 3: Remove the PV modules from the rack.
- Step 4: Use the DC disconnect tool to disconnect the solar module and the DC connector of the microinverter.
- Step 5: Use the AC disconnect tool to disconnect the AC connectors of the failed microinverter and the adjacent microinverter.
- Step 6: Unscrew the fixing screws on the top of the microinverter and remove the device from the PV rack.
- Step 7: Install the new microinverter on the rack, and observe the blinking of the indicator light when the DC line is reconnected.
- Step 8: Connect the replacement microinverter's AC cables to the AC bus.
- Step 9: Close the branch circuit breaker to verify the operation of the replacement microinverter transformer.

5.3 Storage and transport

In order to facilitate transportation and subsequent handling, HHYXIPOWER packaging adopts a special design to protect each component. When transporting equipment, especially by road, protect components from severe moisture, shocks, vibrations, etc.

After receiving the microinverter, please check whether the outer packaging is damaged. If the outer packaging appears damaged, call the carrier immediately.

After unpacking, please check whether the appearance of the inverter is damaged and whether the accessories are complete. In case of damage to the microinverter or missing parts, please

contact the supplier or authorized dealer of Hxyi to apply for repair/replacement and consult the relevant procedures. The storage temperature of the microinverter should be maintained between -40° C to +85° C.

5.4 End-of-life Disposal

If the device is no longer in use or needs to be stored for a long time, please make sure that the packaging is intact. Store the device in a well-ventilated indoor area that will not cause damage to device components.

- When restarting equipment that has been out of service for a long time, a complete inspection of the equipment must be carried out.
- Capacitors, modules and other components contained in the microinverter will pollute the environment, please dispose of them according to local regulations and laws.

6. Human-Computer Interaction

6.1 Installing the App

Method 1

Download and install the App through the following application stores:

- App Store (iOS).
- Google App market (Android, users other than mainland China ones).

Method 2

Scan the following QR code to download and install the App according to the prompt information:

6.2 APP User manual

For more information on using the HYXiPower APP, please refer to the user manual "HYXiPower APP".

6.3 System debugging

For system configuration and debugging, please refer to the user manual "HYXipower Local Debugging APP".

7. Appendix

7.1 Technical Specifications

Product Model	HYX-M300-S	HYX-M400-S	HYX-M500-S
Input (DC)			
Typical module compatibility	240-450 + W	360-600 + W	400-700 + W
Min./Max. MPPT voltage	16 - 60V		
Operating voltage range	16 - 60V		
Max. input voltage	65V		
Start-up input voltage	20V		
Max. input current	16A		
Max. short-circuit DC input current	20A		
Number of MPP trackers	1		
OVC categorie	II		
Max. backfilling current	0A		
Output (AC)			
Rated output power	300VA	400VA	500VA
Rated output current	1.30A	1.74A	2.17A
Rated output voltage	220 / 230 / 240 / 183~276V		
Nominal frequency	50 / 45 - 55, 60 / 55 - 65Hz		
Power factor (adjustable)	>0.99 / 0.8 leading...0.8 lagging		
THDi	< 3%		
Current (inrush)	1.8A		
Max. output fault current	80A		
Max. output overcurrent protection	14A		
OVC categorie	III		
Protective class	Class I		
Max. current of AC cable	40A (10AWG) 、30A (12AWG)		
Efficieny			
Peak efficiency	96.70%		
Nominal MPPT efficiency	99.80%		
CEC peak efficiency	96.30%		
Night-time power loss	< 30mW		
Protection			
Input reverse connection protection	Yes		
Output overcurrent protection	Yes		
Output overvoltage protection	Yes		
Anti-islanding protection	Yes		
Surge protection	Type II		

Product Model	HYX-M300-S	HYX-M400-S	HYX-M500-S
General Data			
Operating ambient temperature	-40 to +65°C		
Dimensions (W*H*D)	188*178*25mm		
Enclosure rating	IP67		
Cooling	Natural convection - No fans		
Weight	1.66kg		
Relative humidity	0-100% RH		
Class of pollution	PD3		
Work environment	Outdoor		
Operating altitude	3000m		
Features			
Communication	Sub-1G		
Monitoring	Hyxi Cloud		
Type of isolation	Galvanically Isolated HF Transformer		

7.2 Wiring Diagram

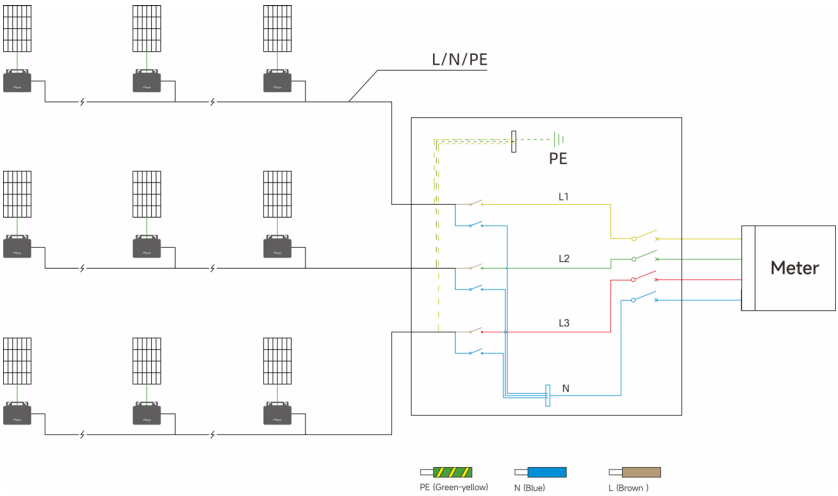

230VAC/400 VAC Three-phase grounding map

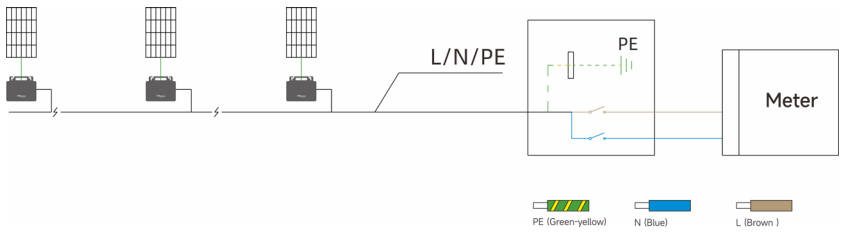

230V Single Phase Grounding Map

7.3 Installation Map

HYXiPOWER

Microinverter Installation Map

Sheet:____ of ____

	1	2	3	4	5	6	7	8	9	10	11	12	13	14	15	16
A																
B																
C																
D																

Azimuth: _____ Panel type: _____ Customer Information: _____

Tilt: _____ DMU Serial No.: _____

6.2.5\18.00032-Ver1.0-202303

7.4 Contact Information

If you have any questions about this product, please contact us !

In order to provide you with faster and better after-sales service, we need your assistance to provide the following information:

Device model: _____

Devise serial number: _____

Fault code/name: _____

Brief description of the fault phenomenon:

_____

_____

_____

Version: v1.0 2023
The manual is subject to change without notice while the product is being improved.

Zhejiang Hyxi Technology Co., Ltd.
9-10F, Building 3, Jiuyao Commercial Center, Zhuantang Sub-district,
Xihu District, Hangzhou, Zhejiang Province, China, 310008
support@hyxipower.com www.hyxipower.com

FCC Warning

This device complies with part 15 of the FCC Rules. Operation is subject to the following two conditions: (1) This device may not cause harmful interference, and (2) this device must accept any interference received, including interference that may cause undesired operation.

Any Changes or modifications not expressly approved by the party responsible for compliance could void the user's authority to operate the equipment.

Note: This equipment has been tested and found to comply with the limits for a Class B digital device, pursuant to part 15 of the FCC Rules. These limits are designed to provide reasonable protection against harmful interference in a residential installation. This equipment generates uses and can radiate radio frequency energy and, if not installed and used in accordance with the instructions, may cause harmful interference to radio communications. However, there is no guarantee that interference will not occur in a particular installation. If this equipment does cause harmful interference to radio or television reception, which can be determined by turning the equipment off and on, the user is encouraged to try to correct the interference by one or more of the following measures:

-Reorient or relocate the receiving antenna.

-Increase the separation between the equipment and receiver.

-Connect the equipment into an outlet on a circuit different from that to which the receiver is connected.

-Consult the dealer or an experienced radio/TV technician for help.

This equipment complies with FCC radiation exposure limits set forth for an uncontrolled environment. This equipment should be installed and operated with minimum distance 20cm between the radiator & your body.

IC Warning

This device complies with Industry Canada’s licence-exempt RSSs. Operation is subject to the following two conditions:
(1) This device may not cause interference; and
(2) This device must accept any interference, including interference that may cause undesired operation of the device.

This equipment complies with IC radiation exposure limits set forth for an uncontrolled environment. This equipment should be installed and operated with minimum distance 20cm between the radiator & your body.

Cet appareil est conforme aux CNR exemptes de licence d'Industrie Canada . Son fonctionnement est soumis aux deux conditions suivantes :
(1) Ce dispositif ne peut causer d'interférences ; et
(2) Ce dispositif doit accepter toute interférence , y compris les interférences qui peuvent causer un mauvais fonctionnement de l'appareil.

Ce matériel est complété par une exposition de rayonnements IC pour un environnement naturel. Ce matériel doit être installé et se faire avec une distance minimale de 20cm entre les radiateurs et les autresYour body shop.