Specification For Approval

Customer: Zhejiang Hua Yuxin Technology Co., LTD

Supplier: GaoKe Ant Co.,Ltd

Customer P/N:

Production Name: 4G cabinet lantern antenna

Production Number: GKZS-4G-SMAFZG2-G

Supplier Signature		
Engineer	Checked by	Approved by
Zhou Yintao	Xieqianju	Yangjingsong
2024.11.22.	2024.11.22.	2024.11.22.

Customer Signature		
Engineer	Checked by	Approved by
years month day	years month day	years month day

Note: After the customer confirms the seal, please return this acknowledgement to our company

GaoKe Ant Co.,Ltd
Add:Room 201,building 1,No. 2650 Guangcong South Road, Taiping Town, Conghua District, Guangzhou,Guangdong,China 510980
Tel: 020-87080630/87080639/87080632
Fax: 020-87080731
http://www.gkzs.com.cn

Description Record

Version	Content Revised	Modifier	Date
A/0	Initial new	Hu Meijiao	2024.11.22

一、Antenna structure dimensions（mm）

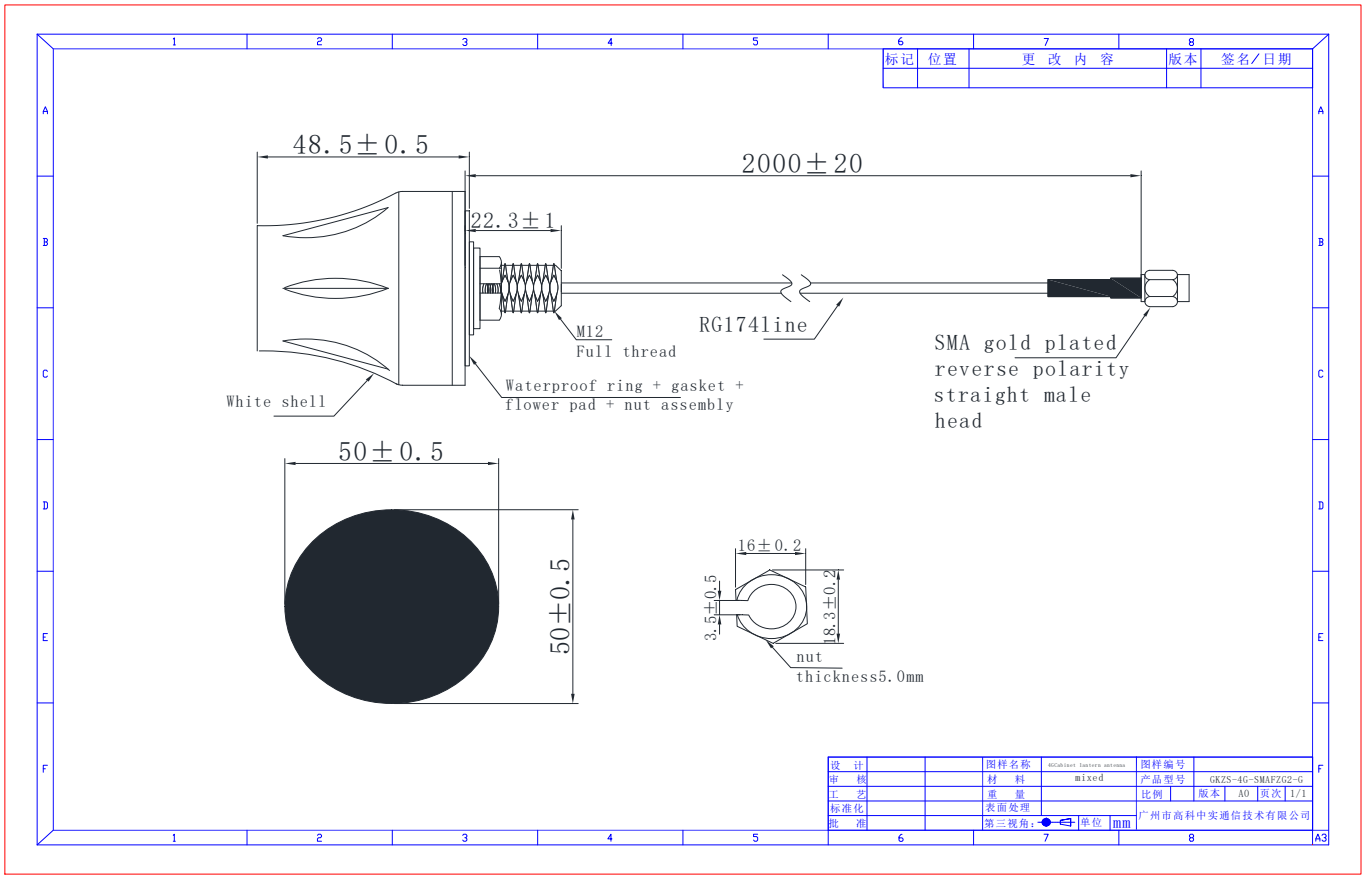

二、Product drawing

三、Basic characteristic of antenna

Design Specifications	Typical
Antenna form	Cabinet lantern antenna
Working Frequency	700-960MHz、1710-2170MHz、2300-2700MHz
Efficiency	≥20%@824-960MHz ≥30%@1710-2170MHz ≥35%@2300-2690MHz
Average Gain	-1.22dBi（average）、1.25dBi（Peak value）@700-960MHz 0.84dBi（average）、1.87dBi（Peak value）@1710-2170MHz 1.15dBi（average）、1.79dBi（Peak value）@2300-2700MHz
VSWR	≤3@700-960MHz ≤2@1710-2700MHz
Ploriaztion	Linear polarization
Radiation pattern	omnidirectional
Impedance	50Ω
Interface	SMA Gold plated reverse polarity straight male head/RG174Line length2M
Overal dimensions	Ø50x 48.5mm
Weight	56.3g
Operatin Temp	-40°C~80°C

四、RG174Line size

Structural parameter

	Materials	diameter(mm)
1. Inner conductor	Bare copper wire	1/0.45
2. insulator	Solid polyethylene（PE）	1.50-1.51
3. Outer conductor	Pure copper wire braid (64 braid)	1.9-2.0
4. sheath	blackPVC	2.80-2.85

Electrical property parameter

capacitance(pF/m)	101.05
impedance(ohm)	50
speed(%)	66
Bending radius（mm）	10
Maximum operating voltage(VMS)	1500
Maximum operating frequency（MHz）	3000
Operating temperature range (℃)	-20to +80
Braided filament elongation（%）	≥10
Tension of the finished line（N）	≤140
Interference signal shielding rate of finished cable（%）	≥95

Attenuation (typical value)

frequency（MHz）	attenuation (≠dB/m)
100	0.276
400	0.558
1000	0. 899
2000	1. 961
3000	2. 537

五、SMAHead characteristic

1.Material and coating

Serial number	Part name	material	coating	remark
1	Inner conductor	Brass wire	gild	Hard gold
2	insulator	Polytetrafluoroethylene		
3	shell	Orichalcum（HPb59-1）	gild	Hard gold

2. Electrical performance

Serial number	Test item	Technical index	remark
1	Characteristic impedance	50Ω	
2	Temperature range	-65～+165℃	
3	Frequency range	0～6GHz	
4	Dielectric withstand voltage	1000V(rms)	
5	Contact resistance	Inner conductor≤3mΩOuter conductor ≤2mΩ	
6	Insulation resistance	≥5000MΩ	
7	Voltage standing wave ratio	≤1.5(Flexible cable)	
8	Salt spray time	48H	

3.Mechanical property

Serial number	Mechanical property	Technical index	remark
1	Mechanical durability	≥500times	

六、4GAntenna performance test

1、Standing Wave ratio

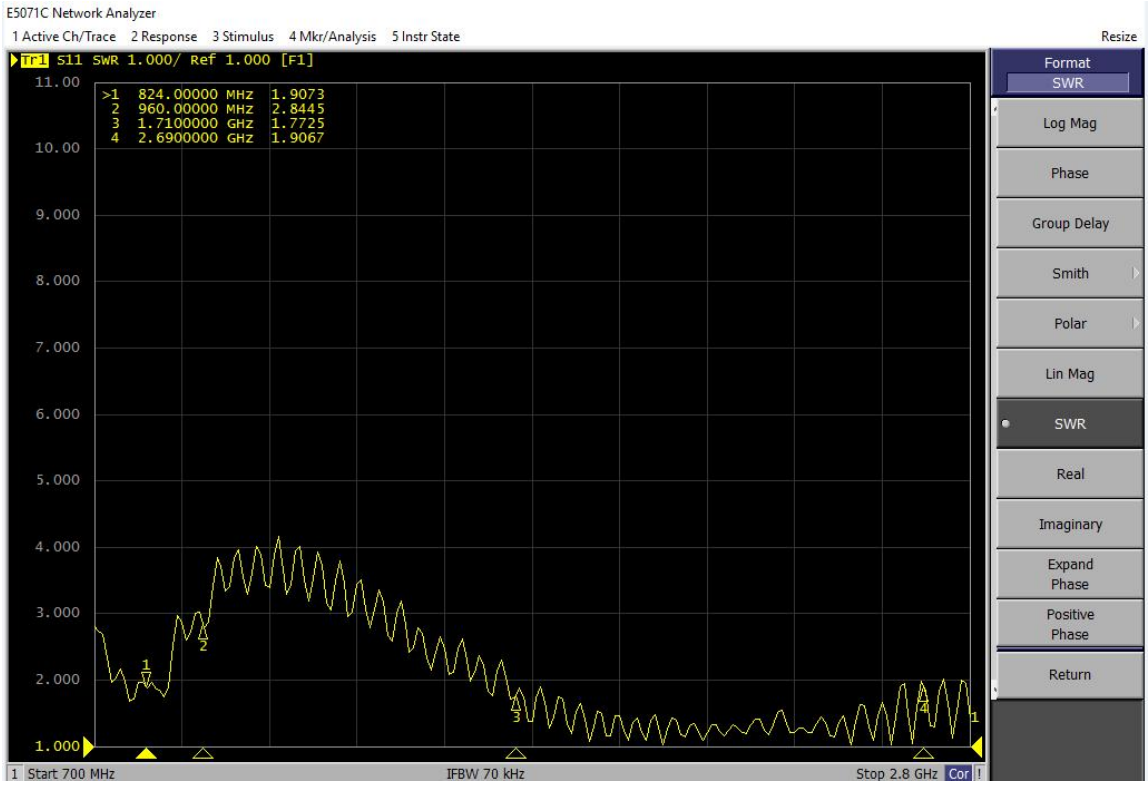

2、Return loss

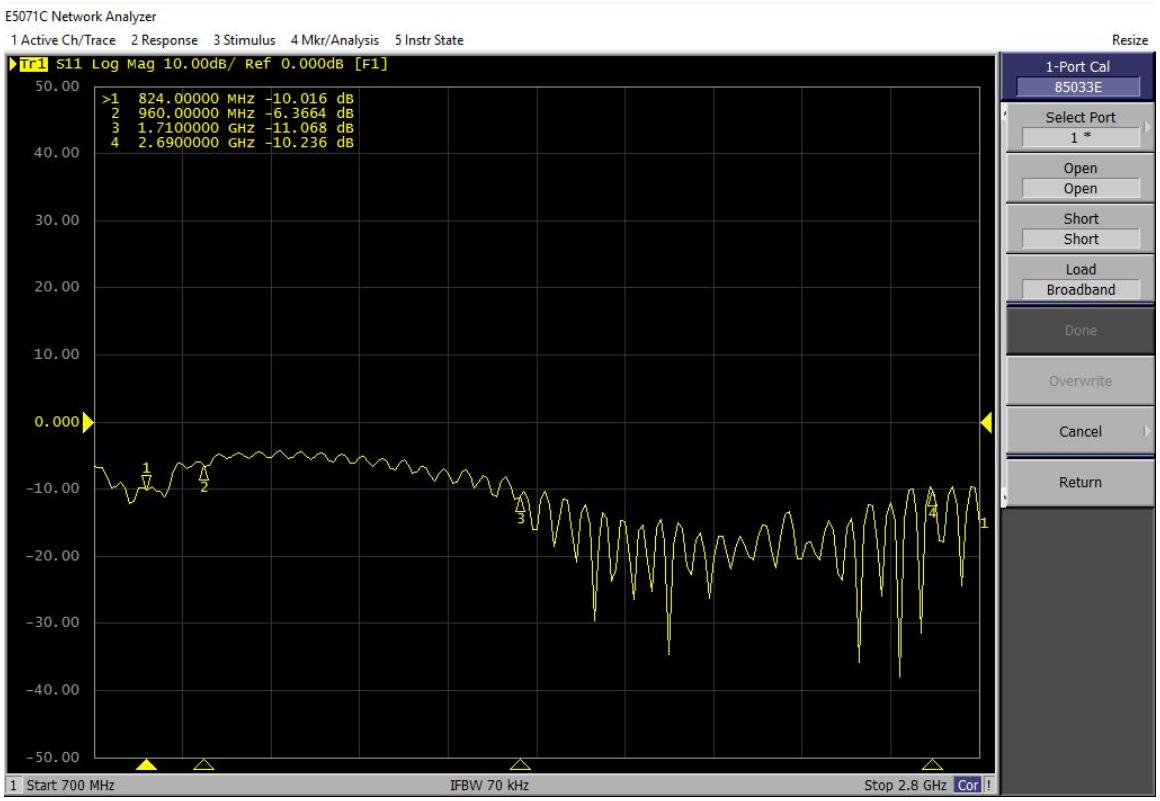

3、Direction diagram

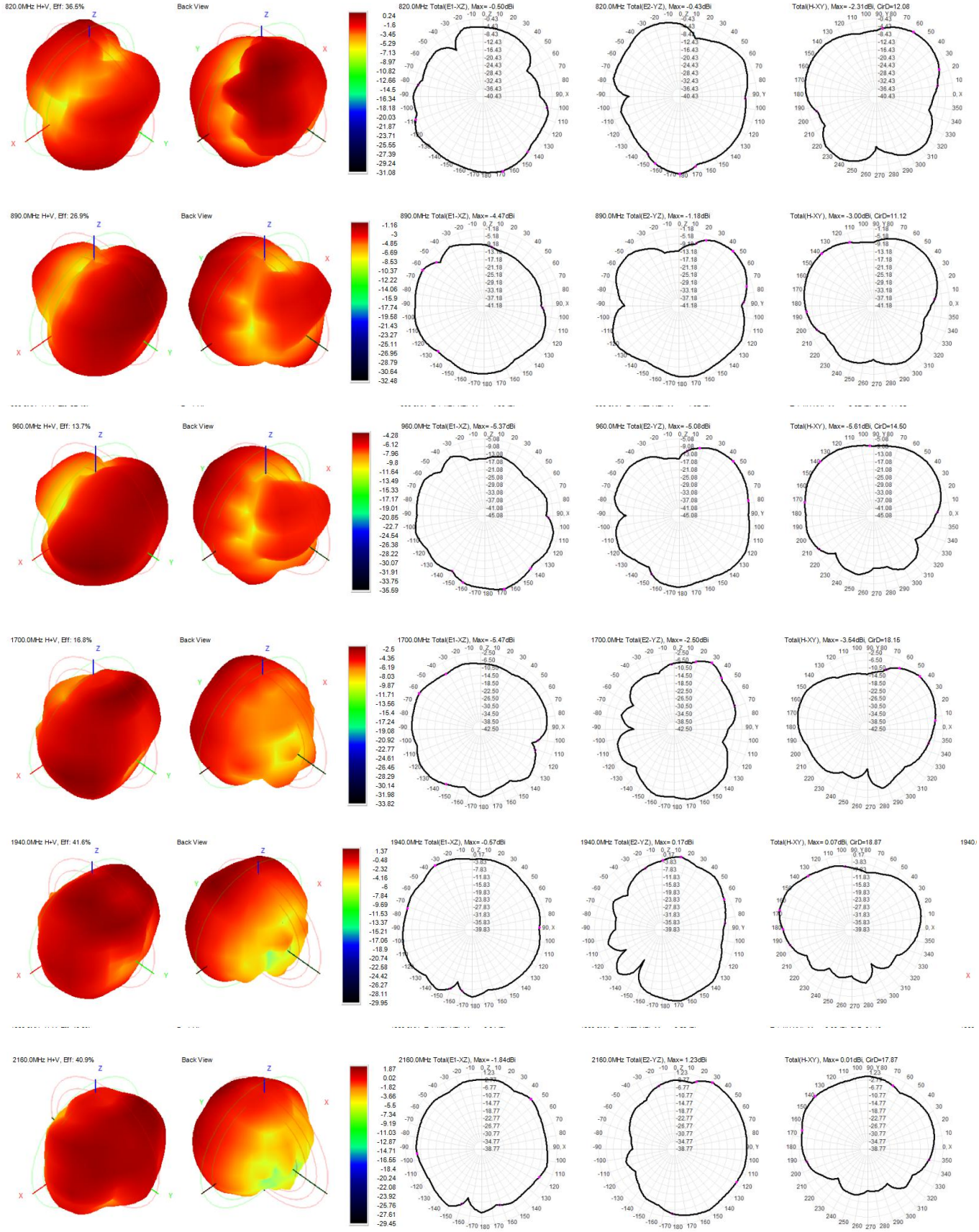

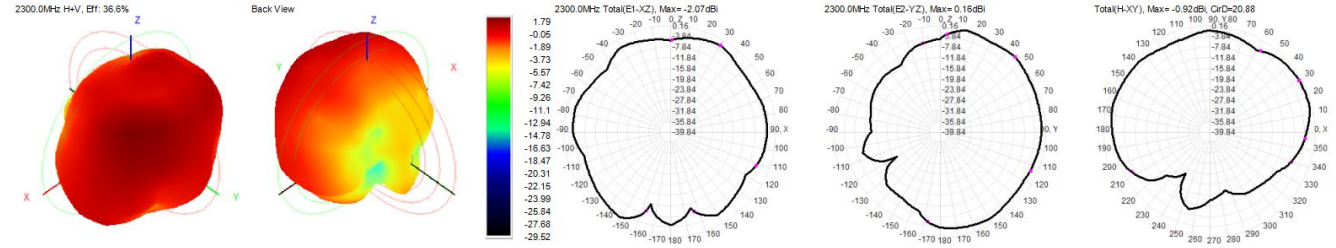

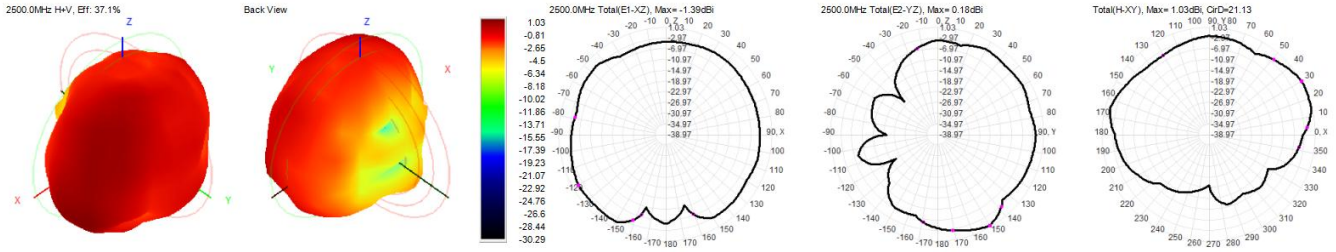

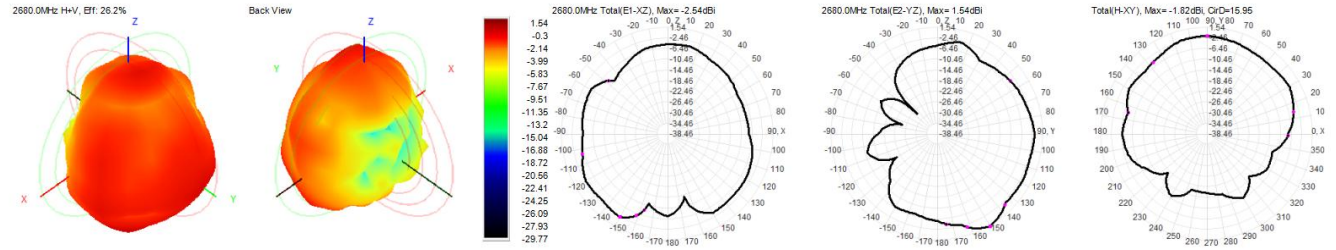

4、Efficiency curve diagram

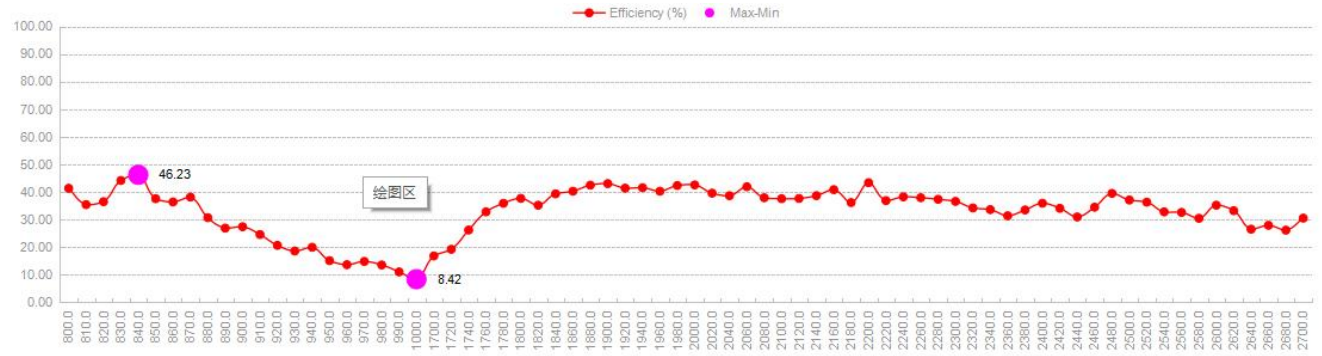

5、Gain curve diagram

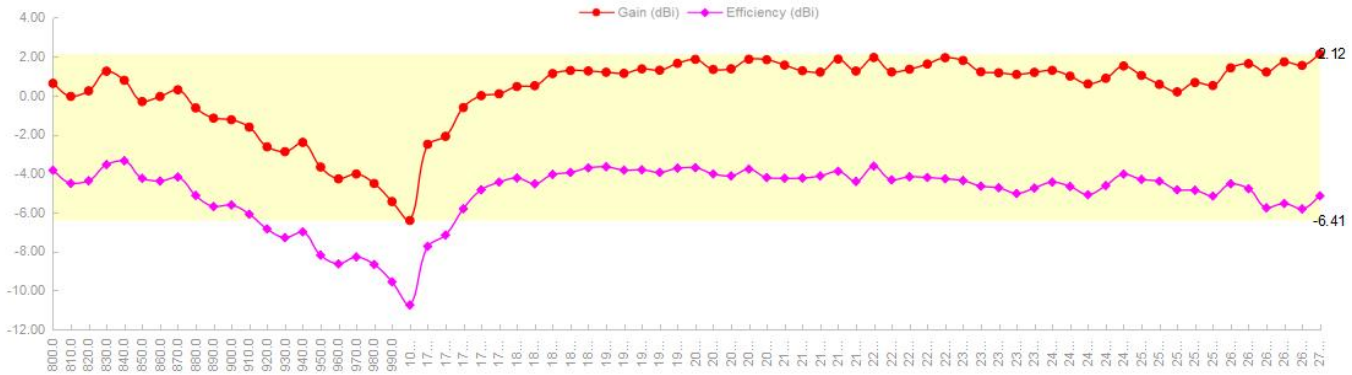

七、Reliability test report

Product name:	Cabinet lantern antenna	Product model	GKZS-4G-SMAFZG2-G	
Test item	Test condition	criterion	Trial number	determine
High temperature test	60℃±2℃Environmental placement12H;	All sizes meet the requirements; Appearance no deformation, degumming, rust, watermarking and other phenomena; No damage, melting, bubble and other phenomena of wire; Normal performance	5PCS	Up to standard
Low temperature test	-40℃±2℃Environmental placement12H;	All sizes meet the requirements; Appearance no deformation, degumming, rust, watermarking and other phenomena; Normal performance	5PCS	Up to standard
Temperature cycle	1、Place at -20 ° C for 30 minutes, at 25 ° C for 5 minutes, at 60 ° C for 30 minutes and at 25 ° C for 5 minutes 2、Number of cycles: 5;	All sizes meet the requirements; Appearance no deformation, degumming, rust, watermarking and other phenomena; Normal performance	5PCS	Up to standard
Thermal resistance	The temperature was 40 ° C ±2 ° C and the humidity was 93±2%RH	All sizes meet the requirements; Appearance no deformation, degumming, rust, watermarking and other phenomena; Normal performance	5PCS	Up to standard
Salt spray test	Place in a closed environment with a concentration of 5% (m²) sodium chloride solution, PH value of 6.5-7.2, temperature of 35 ° C ± 2 ° C and humidity >85%RH for 48 hours	Cable head no oxidation, yellow, green, red rust, white rust, etc.; Normal performance	5PCS	Up to standard

Product drawing before sample:

Product drawing after sample:

Test equipment:			
Test/Date:	Xie Jiayao/2024.11.22	Audit/Date:	Jeon Jun/2024.11.22
备注:			

八、Packing instructions

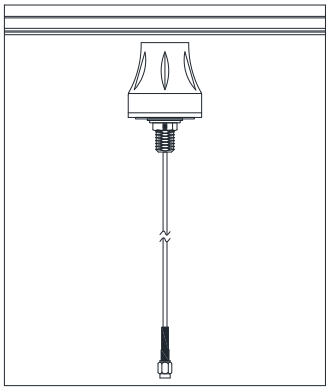

Step 1: 1PCS/Bag, sealed。

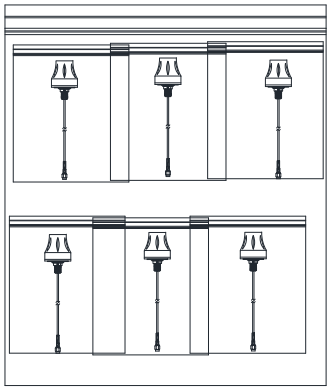

Step 2: 30pcs/Large plastic bag, sealed。
The actual quantity is subject to the quantity of packages shipped

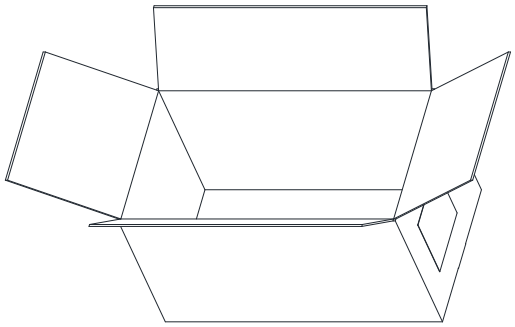

Step 3:150PCS/ box (actual subject to shipment)

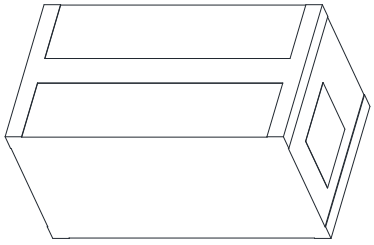

Step 4: Attached shipment inspection report,

Label the top left corner of the outer side of the case and seal it