Tuttnauer
Innovation · Legacy · Partnership

Operation and Maintenance Manual

Table Top Steam Sterilizer
Models T-Top 10 & T-Top 11

Cat. No. MAN205-0502040EN Rev. B

Tuttnauer. Ltd., Har Tuv Industrial Zone, B P.O. Box 170, Beit Shemesh, 9910101, Israel.
Tel: 972 2 9904611, Fax: 972 2 9904730

Tuttnauer U.S.A. Co, Ltd., 345 Oser Avenue, Hauppauge, NY 11788, U.S.A.
Tel: (631) 737-4850, (800) 624-5836, Fax: (631) 737-0720

Operation and Maintenance Manual

Table Top Steam Sterilizer

Models T-Top 10 & T-Top 11

Cat. No. MAN205-0502040EN Rev. B

November 2023

Tuttnauer. Ltd., Har Tuv Industrial Zone, B P.O. Box 170, Beit Shemesh, 9910101, Israel.
Tel: 972 2 9904611, Fax: 972 2 9904730

Tuttnauer U.S.A. Co, Ltd., 345 Oser Avenue, Hauppauge, NY 11788, U.S.A.
Tel: (631) 737-4850, (800) 624-5836, Fax: (631) 737-0720

Table of Contents

Paragraph **Page No.**

1. GENERAL INFORMATION 1
   1.1 Manufacturer and US Official Correspondence Information 1
   1.2 Applicable Regulation and Quality Standards 1
   1.3 Legend for Symbols appearing on the Labels and in this Manual 3
   1.4 General Description of the Device 5
   1.5 Indications for Use 6
   1.6 Intended Users 6
   1.7 Warranty Description 6
   1.8 Warranty Statement 7
   1.9 Customer Inspection Upon Receival of the Device 7
   1.10 Device Specifications 8
   1.11 Requirements with concern to Water Quality 13
2. SAFETY 14
   2.1 Principle Safety Warnings and Precautions 14
   2.2 Cybersecurity 15
3. DEPICTION OF SYSTEM PARTS 19
   3.1 Front View 19
   3.2 Top View 21
   3.3 Rear View 22
4. INSTALLATION INSTRUCTIONS 23
   4.1 Lifting and Carrying 23
   4.2 Device Placement and Operating Conditions 23
   4.3 Connections to Utility Supplies 24
   4.4 Storage 24
   4.5 Configuring the Device 25
   4.6 Before starting the Autoclave 26
5. PRE-STERILIZATION CLEANING AND DISINFECTION OF INSTRUMENTS AND THEIR LOADING INTO THE DEVICE 29
6. INITIAL OPERATING INSTRUCTIONS 31
   6.1 Turning on the Device 31
   6.2 Filling Water 31

6.3 Filling water in the reservoir 33
6.4 See the requirements concerning Water Quality, in Section 1.11 33
6.5 Setting Date and Time 34
6.6 Class S and Class B 35
6.7 Setting Class S and Class B 37
7. OPERATING INSTRUCTIONS - CONTROL PANEL 40
7.1 Home screen Description and Functions 42
7.2 Opening the Device Door 44
7.3 Starting a Cycle 45
7.4 Available Sterilization Programs and Test Programs 48
7.5 Cycle Succeeded / Cycle Failed Notifications and Follow-on 50
7.6 Aborting a cycle 51
7.7 Custom Programs 52
7.8 Cycles history 53
7.9 Opening the door and Unloading 54
7.10 Checking Waste Water Level 54
7.11 Draining the Reservoirs 55
8. PREVENTIVE AND SCHEDULED MAINTENANCE TO BE PERFORMED BY THE OPERATOR 57
8.1 Daily Maintenance 57
8.2 Weekly Maintenance 57
8.3 Monthly Maintenance 58
8.4 Periodic Maintenance 58
9. FULL LIST OF INFORMATIVE SCREEN DISPLAY SYMBOLS, OPERATING MESSAGES, ERROR MESSAGES AND TROUBLESHOOTING 62
9.1 Symbols 62
9.2 Error Messages & Troubleshooting 63
10. TSC PRINTER INSTALLATION (OPTIONAL) 70
10.1 General printer information 70
10.2 Safety instructions 72
10.3 Setting printer definitions 73
11. SYSTEM CLEAN PROGRAM 75
11.1 General 75
11.2 System Clean Cleaning Procedure 76

1. General Information

1.1 Manufacturer and US Official Correspondence Information

T-Top autoclaves are manufactured by Tuttnauer Ltd., Located Har – Tuv B Industrial Zone, P.O. Box 170, Beit Shemesh 9910101, Israel.
Tel: +972-2-9904611

The US Official Correspondence is the following:

Tuttnauer U.S.A. Co, Ltd. 345 Oser Avenue, Hauppauge, NY 11788, USA.
Tel (631) 737 4850, (800) 624 5836, Fax: (631) 737 0720

1.2 Applicable Regulation and Quality Standards

The life cycle of Tuttnauer's T-Top is in compliance with the following regulation and quality standards:

- **Medical Device Directive 93/42/EEC as amended by 2007/47/EC**
- **Medical Device Single Audit Program** - companion document, doc# MDSAP AU G0002.1.004 rev. 13-04-2017Ft
- **MDSAP audit approach** - doc# MDSAP AU P0002.005
- **FDA QSR 21 CFR part 820 & part 11**
- **Australian Therapeutic Goods** - (Medical Devices) Regulations 2002
- **Brazilian Good Manufacturing Practices** - (RDC ANVISA 16/2013, 67/2009, 56/2001, 23/2012)
- **Japanese QMS Ordinance** - (MHLW MO 169)
- **Canadian MDR (CMDR)** - SOR/98-282 (2018), consolidated
- **Global Unique Device Identification Database (GUDID)** - Guidance for Industry and Food and Drug Administration Staff
- **ISO 9001** - Quality Management System
- **EN ISO 13485** - Quality Management System – Medical Devices
- **ISO 14001** - Environmental management system
- **ISO 17025** - General requirements for the competence of testing and calibration laboratories
- **EN ISO 14971** - Medical devices – Application of risk management for medical devices
- **ASME Code** - Section I and Section VIII. Div. I
- **PED** - 2014/68/EU
- **Chinese Regulations** - Special Equipment Licensing Office
- **EN 13060** - Small Steam Sterilizer
- **ANSI/AAMI/ST55** - Tabletop Steam Sterilizer
- **ISO 17665** - Sterilization of health care products – Moist heat
- **ANSI/AAMI/ST79** - Comprehensive guide to steam sterilization and sterility assurance in health care facilities
- **IEC 61010-1** - Safety requirements for electrical equipment for measurement, control, and laboratory use – Part 1: General requirements
- **IEC 61010-2-040** - Safety requirements for electrical equipment for measurement, control, and laboratory use – Part 2-040: Requirements for sterilizers and washer-disinfectors used to treat medical materials

- **EN 61326-1** - EMC Requirements for Electrical Equipment. The autoclave defines Class A - devices, are those that are marketed for use in a commercial, industrial, or business environment.
- **IEC 62304** - Medical Device Software – Software life cycle processes
- **FCC - Part 15 Subpart C**
- **FCC - Part 15 Subpart B**

1.3 Legend for Symbols appearing on the Labels and in this Manual

	Manufacturer
	Year of Manufacturing
MD	Medical Device
#	Model Number
SN	Serial Number
	Consult the Operation and Maintenance Manual (User Manual) before use
	Keep away from sunlight and protect from heat.
	For Indoor Use Only
	Keep dry
	Disposal according to electronic scrap ordinance

	This side up (during transport and shipment)
	Fragile (during transport and shipment)
OR	A warning or precaution as detailed in the Operation and Maintenance Manual (User Manual)
OR	Caution! Hot Surface

1.4 General Description of the Device

The autoclave is fully automatic (a computerized control unit ensures a fully automatic sterilization cycle, control and monitoring of physical parameters and a clear documentation of the sterilization cycle. Drying is performed with the door closed).

This autoclave uses steam as a sterilizing agent.

The steam is produced by warming up a controlled amount of water inserted to a pipe heating element, and then to the chamber. This technique saves energy and water consumption.

The autoclave is equipped with a Pipe heating element and with chamber heaters to maintain the steam inside the chamber.

The autoclave is equipped with a vacuum system, which supports and improves:

- Removal of residual air from packs and porous load and most kinds of tubes (rubber, plastic etc.) by vacuum at the first stage of the cycle.
- Steam penetration into the load; resulting in effective sterilization.
- Temperature uniformity.
- Post sterilization drying phase

A touchscreen is used for monitoring and control purposes.

The device has 2 built -in USB ports to enable the operation of an external optional barcode printer:

- The barcode printer can print labels with a unique cycle ID barcode, operator name, sterilization and expiry dates
- One barcode printer can be connected to the machine.
- The printer connection to the machine, by using a USB socket, with a dedicated cable.
- Barcode printer power supply voltage can range between 100-240V (external power supply - not from the USB socket).
- A barcode printer is an optional addition to the autoclave

The device features built-in memory to record up to 500 sterilization cycles. These can be exported to a USB device to be transferred to a PC.

1.5 Indications for Use

The T-Top 10 and T-Top 11 tabletop autoclaves are designed for the sterilization of medical and surgical goods such as wrapped and unwrapped solid, hollow, and porous loads used in healthcare facilities (e.g. hospitals, nursing homes, extended care facilities, freestanding surgical centers, clinics and medical & dental clinics).

The T-Top 10 and T-Top 11 devices are validated for use in:

- Unwrapped instruments, wrapped instruments and dental handpieces (Class S cycles).
- Unwrapped instruments, wrapped instruments, sterilizing dental handpieces and textiles/porous loads (Class B cycles).

1.6 Intended Users

The T-Top 10 and T-Top 11 tabletop autoclaves are intended for use by hospital personnel and other medical personnel .

All autoclave users must receive training in proper usage from an experienced employee. Every new employee must undergo a training period under an experienced employee.

1.7 Warranty Description

This warranty does not include routine cleaning and preventive maintenance, to be performed according to instructions in chapter 8 .

This product is sold with a limited warranty and specific remedies are available to the original purchaser in the event that the product fails to conform to the limited warranty.

In general, and in a non-limited manner, Tuttnauer shall not be responsible for product damages caused by natural disasters, fire, static discharge, misuse, abuse, neglect, improper handling or installation, unauthorized repair, alteration or accident.

Tuttnauer’s obligation is limited to the repair or replacement of parts for the device. This warranty will be void if the unit is not purchased from an authorized Tuttnauer dealer. No other warranties or obligations are expressed or implied.

1.8 Warranty Statement

The warranty registration must be completed and returned to our service departments; within fourteen (14) days of purchase or the warranty will be void.

Our American Representative's Technical Service Department can be reached at:

Tuttnauer U.S.A. Co, Ltd. 345 Oser Avenue, Hauppauge, NY 11788, USA.
Tel (631) 737 4850, (800) 624 5836, Fax: (631) 737 0720

Note: If there is any difficulty with this autoclave, and the solution is not covered in this manual, contact our representative or us first. Do not attempt to service this autoclave yourself. Describe the difficulty as clearly as possible so we may be able to diagnose the problem and provide a prompt solution.

If replacement parts are needed, stipulate the model and serial number of the machine.

No autoclaves will be accepted for repair without proper authorization from us. All transportation charges must be paid both ways by the owner.

For technical information or service please contact us at:

Tuttnauer U.S.A. Co, Ltd. 345 Oser Avenue, Hauppauge, NY 11788, USA.
Tel (631) 737 4850, (800) 624 5836, Fax: (631) 737 0720

Tuttnauer Ltd., Har – Tuv B Industrial Zone, P.O. Box 170, Beit Shemesh 9910101, Israel

Tel: +972-2-9904611

1.9 Customer Inspection Upon Receival of the Device

Upon receiving your Tuttnauer Autoclave, carefully inspect the outside of the shipping carton for signs of damage. If any damage to the carton is found, note the location with respect to the autoclave and check that area of the autoclave carefully once it is fully unpacked. Observe packing method and retain packing materials until the unit has been inspected. Mechanical inspection involves checking for signs of physical damage such as: scratched panel surfaces, broken knobs, damaged gasket etc.

If any damage is found, contact your dealer as soon as possible so that they can file a claim with the shipping carrier and also notify Tuttnauer.

All Tuttnauer products are carefully inspected prior to shipment and all reasonable precautions are taken in preparing them for shipment to assure safe arrival at their destination.

Manufacturer Sterilization Performance Validation

The sterilization performance validation of all sterilization programs and test programs were performed by the manufacturer according to EN 13060.

1.10 Device Specifications

1.10.1 Device Overall Dimensions - T-Top 10

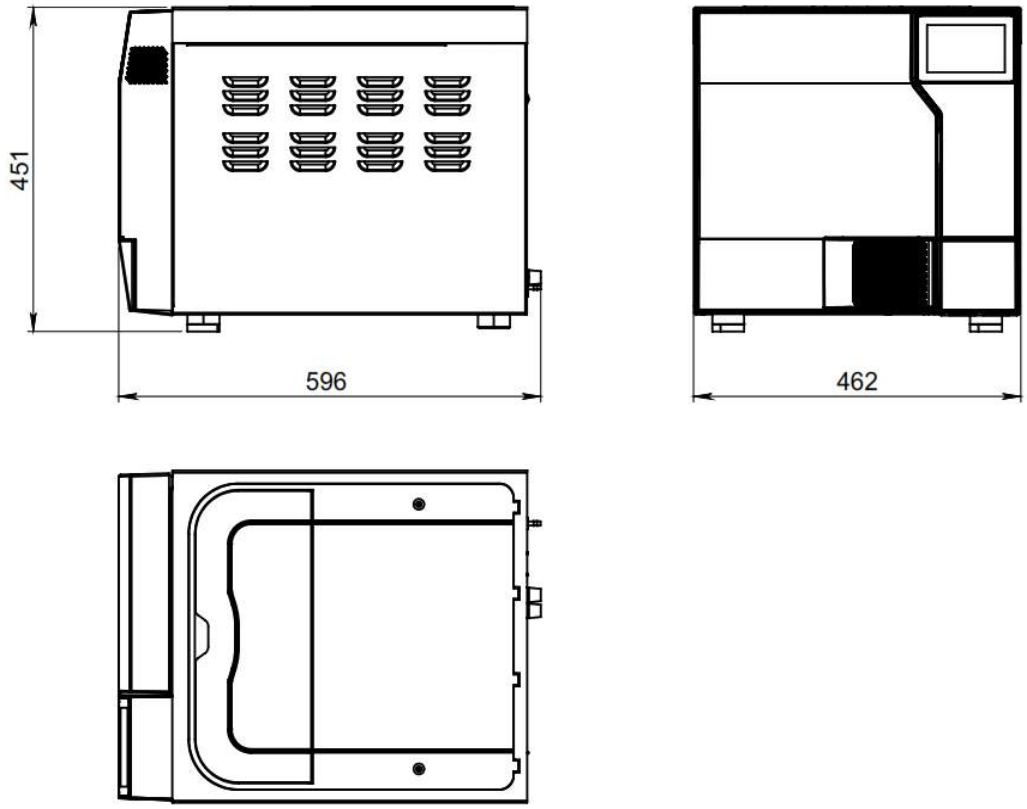

1.10.2 Device Overall Dimensions - T-Top 11

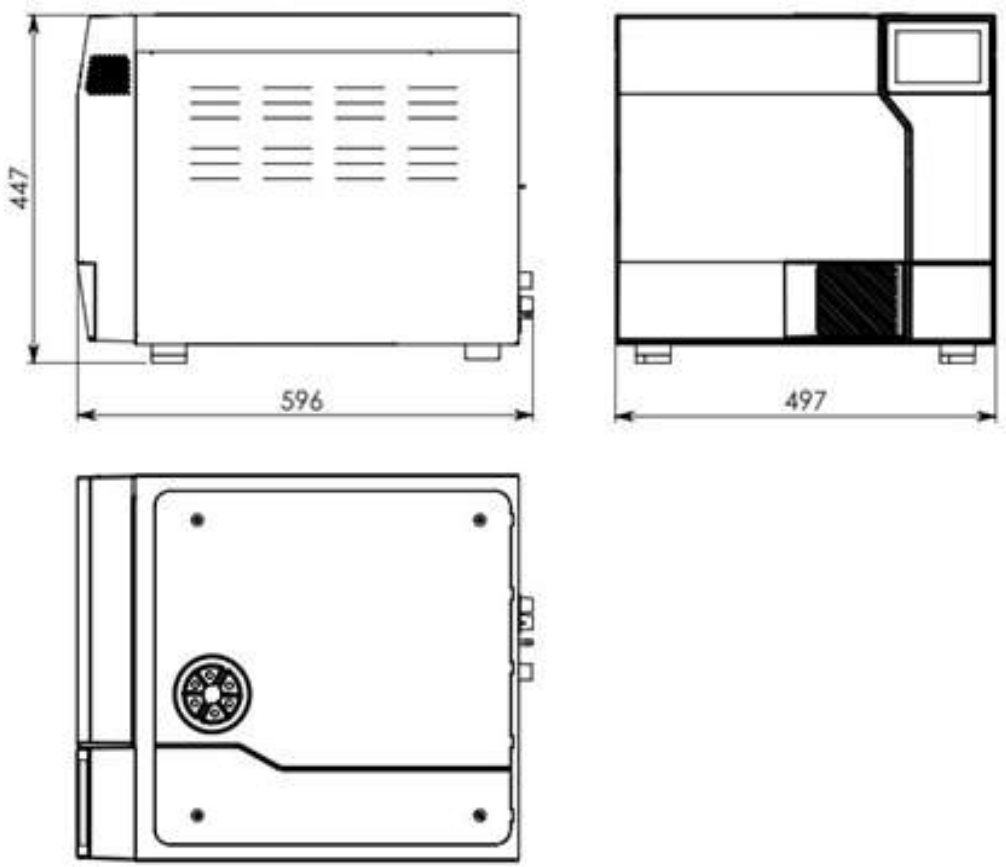

1.10.3 T-Top fit into sterilization center cabinet - dimensions:

To allow adequate cooling & ventilation of the autoclave placed inside the sterilization center Cabinet, the following are the minimum dimensions required for the cabinet :

T-Top 10:

Width - 19"/482 mm; Height – 24.4"/620 mm; Depth - 23.4"/595 mm

T-Top 11:

Width - 20.3"/517 mm; Height – 19.7"/500 mm; Depth - 23.4"/595 mm

Note: The imperial dimensions in inches/lbs are approximated to less than 3 percent.

1.10.4 **Device Properties**

Property		Dimension	
		T-Top 10	**T-Top 11**
External size	Width	~18"(462mm)	~19.5"(497mm)
	Height	~17.7"(451mm)	~17.5"(447mm)
	Depth	~23" (585 mm) supporting common install base carry a ~23.8" (605 mm) counter top	
Chamber	Diameter	~9.8"(249 mm)	~11"(280 mm)
	Depth	~17.7"(450mm)	~17.7"(452mm)
	Volume	~710 Ounces (21lit)	~913 Ounces (27lit)
	Usable chamber space	75% (~541 Ounces / ~16 L)	75% (~685 Ounces / ~20 L)
Max. Allowable Working Pressure (MAWP)		~40.6PSI (2.8 bar)	
Maximum load per tray	Unwrapped	~2.67 lbs (1.2kg)	~4 lbs (1.8kg)
	Wrapped	~1.6 lbs (0.72kg)	~2.4 lbs (1.08kg)
Maximum Solid load	Unwrapped	~13 lbs (6kg)	~19.8 lbs (9kg)
	Wrapped	~7.9 lbs (3.6kg)	~11.9 lbs (5.4kg)
Maximum textile load		~3.3 lbs (1.5kg)	~4.4 lbs (2kg)
Tray dimensions		~14.7" x~7.3"x~0.6" (375mm x 185mm x 15mm)	~14.7" x~8.14"x~0.6" (375mm x 207mm x 15mm)
No. of trays		4	
Net weight		~99.2lbs (45kg)	~115lbs (52kg)
Shipping weight		~112lbs (51kg)	~127.8lbs (58kg)
Floor loading requirements		~165 lbs (75kg)	
Mineral-free water reservoir	Max. water volume	~122 Ounces (3.6lit) Overflow ~236.6 Ounces (7lit)	~169 Ounces (5lit) Overflow ~236.6 Ounces (7lit)
	Min. water volume	~45.6 Ounces (1.35lit) (up to the float)	

Property		Dimension T-Top 10 T-Top 11
Used (waste) water reservoir	Max. water volume	~127 Ounces (3.75 lit) - up to float ~182.5 Ounces (5.4lit.) - overflow
Safety relief valve		~40 PSI (2.8 bar)
Load No. counter		Counting from 0 to 500.00 and nullifies.

1.10.5 **Device Electrical Data**

Property	Value	
	230V	**120V**
Total Power	1800W	1500W
Voltage	1Ph / 230 VAC	1Ph / 120 VAC
Amperage	10A	12.5A
Protection against electrical shock	IEC 61010-1	
Mains supply fluctuation	+/- 10%	
Frequency (Hz)	50/60Hz	60Hz
Pollution degree	Pollution degree 2	
Over-voltage category	Category II	
Pollution degree of the intended environment		

1.10.6 **Utility Requirements**

Property	Value	
	230V	**120V**
Mineral-free water	See table in Water Quality	
Drain	Optional - 10mm, withstanding temp. of 80°C	
Power supply	* 1 phase, 230VAC ±10%, 50/60Hz	* 1 phase, 120VAC ±10%, 60Hz
Recommended circuit breaker	16A	15A

* According to the local network.

Caution!

In order to avoid any injury by electrical hazard, it is recommended that a ground fault protection device (GFCI) be installed in the electrical panel feeding the autoclave (local codes may make this mandatory).

The electrical network must comply with local rules and regulations.

Verify that there is an easy access to the main power switch and to the current leakage safety relay (GFCI). The voltage supplied to the device must comply with the label ± 10%.

1.11 Requirements with concern to Water Quality

Warnings:

The use of water for autoclaves that do not comply with the table below may have severe impact on the working life of the sterilizer and can invalidate the manufacturer's warranty.

In the case of a generator:

- Use only water having the characteristics stated in the table below. Using tap water will clog the system and invalidate the manufacturer's warranty.
- Use only deionized water, having a maximum conductivity of 15 µs/cm. Conductivity greater than 15 µs/cm may cause failures.
- The range of hardness value 0.7-2.0 mmol/l (70- 200 mg/l CaCO3). The use of soft water is strictly forbidden! Please consult a water specialist!

The distilled or mineral-free water supply to the autoclave shall be according to the table below:

Suggested Maximum Limits of Contaminants in Water for Steam Sterilization per EN13060

Substance	Feed Water	Condensate
Evaporate residue	≤ 10 mg/l	≤ 1.0 mg/l
SiO_2	≤ 1 mg/l	≤ 0.1 mg/l
Iron	≤ 0.2mg/l	≤ 0.1mg/l
Cadmium	≤ 0.005 mg/l	≤ 0.005 mg/l
Lead	≤ 0.05 mg/l	≤ 0.05 mg/l
Rest of heavy metals except iron, cadmium, lead	≤ 0.1 mg/l	≤ 0.1 mg/l
Chloride (Cl)	≤ 2 mg/l	≤ 0.1 mg/l
Phosphate	≤ 0.5 mg/l	≤ 0.1 mg/l
Conductivity (at 20°C)	≤15 µs/cm	≤ 3 µs/cm
pH value	5 to 7.5	5 to 7
Hardness	≤ 0.02 mmol/l	≤ 0.02 mmol/l
Appearance	Colorless, clean, without sediments	

Compliance with the above data should be tested in accordance with acknowledged analytical methods, by an authorized laboratory.

2. Safety

2.1 Principle Safety Warnings and Precautions

- NEVER operate a new autoclave or steam generator before the safety, licensing, and authorization department has approved it for use.
- Always operate the autoclave strictly as instructed in this user manual.
- The device is designed to carry safeguards against cybersecurity threats. If you fear the device has been compromised, immediately contact the authorized representative.
- The instructed Steam Sterilization Program should be verified against the programs available in this autoclave. Verify that you have chosen the appropriate sterilization program. When sterilizing materials, make sure that the item can withstand the sterilization temperature.
- A written procedure should be established to ensure safe autoclave operation, including: Daily safety tests; seal inspection and door hinge inspection; smooth action of the closing mechanism; chamber cleaning; prevention of clogging; preservation from corrosion; and finally, what is permitted and what is prohibited for sterilization and choosing a sterilization program.
- If there is a steam generator – drain it daily.
- If there is an air compressor – drain it daily.
- Before use, check the autoclave chamber to ensure that no items have been left from a previous cycle.
- Before loading the autoclave, clean the strainer on the chamber floor.
- Load trays in a manner that enables steam to move freely among all items.
- Be careful: the surfaces may be hot! Before withdrawing trays, wear heat resistant gloves and avoid touching hot loads and surfaces.
- During loading and unloading, use safety gloves and glasses in accordance with local safety regulations and good practice.
- If applicable: Do not remove the top cover during a running cycle. Hot water / steam may exit!
- Only technical personnel having proper qualifications and holding technical documentation (including a Technician Manual), and adequate information are authorized to install and serve the apparatus.
- Mind the power socket. Keep it and its vicinity dry. Danger of electrocution.
- If applicable: Before moving the autoclave, make sure that the electrical cord is disconnected from the power and there is no pressure in the chamber.
- For devices that weigh less than 75kg – The device is not designed for use on any standard slide out shelf. If necessary, it must be tested and/or rated for 75kg or more.
- Once a month, ensure that the safety valves are operating.
- Once a year, or more frequently, effective tests must be performed by a certified technician, i.e., calibration and validation.
- Make sure there are no leaks, breaks, blockages, whistles or strange noises.
- Notify the person in charge immediately of any deviation or risk of proper function of the device or with the shipping carrier, and also notify the Tuttnauer representative.
- Insufficient space for ventilation may result in malfunction or damage due to overheating.

- In order to assure proper operation of the autoclave, it should not be placed in the vicinity of electrical equipment which is not certified for Electromagnetic Compatibility according to IEC/EN 61326-1.
- The user shall report any serious incident that occurred in relation to the sterilizer, to the manufacturer and the authority having jurisdiction in their locale.
- Disposal of the device should be done in accordance with local laws.
- **FCC Warning:** This device complies with part 15 of the FCC Rules. Operation is subject to the following two conditions: (1) This device may not cause harmful interference, and (2) this device must accept any interference received, including interference that may cause undesired operation.

  Any Changes or modifications not expressly approved by the party responsible for compliance could void the user's authority to operate the equipment.

  This equipment has been tested and found to comply with the limits for a Class B digital device, pursuant to part 15 of the FCC Rules. These limits are designed to provide reasonable protection against harmful interference in a residential installation. This equipment generates uses and can radiate radio frequency energy and, if not installed and used in accordance with the instructions, may cause harmful interference to radio communications. However, there is no guarantee that interference will not occur in a particular installation. If this equipment does cause harmful interference to radio or television reception, which can be determined by turning the equipment off and on, the user is encouraged to try to correct the interference by one or more of the following measures:
    - Reorient or relocate the receiving antenna.
    - Increase the separation between the equipment and receiver.
    - Connect the equipment into an outlet on a circuit different from that to which the receiver is connected.
    - Consult the dealer or an experienced radio/TV technician for help.

  The antenna(s) used for this transmitter must be installed to provide a separation distance of at least 20 cm from all persons and must not be collocated or operating in conjunction with any other antenna or transmitter, End-Users must be provided with transmitter operation conditions for satisfying RF exposure compliance.

2.2 Cybersecurity

1. <u>Autoclave Connectivity</u>

Product specifications:

The autoclave includes connectivity capabilities used for:

- Exporting the autoclave’s cycles data.
- Importing and exporting the device settings.
- Installing new software updates.
- Remote monitoring .
- Printing data from the device on paper or labels.

The autoclave includes a USB, and Wi-Fi connection, used for:

a. USB

- Printing.
- Importing and exporting settings.
- Installing a new software version.
- Exporting cycles data.

b. Wi-Fi connection

- Importing and exporting settings by the internet.
- Exporting settings by the local network.
- Installing new software versions from the internet.
- Exporting cycles data by the local network, or by the internet.
- Monitoring the devices from a local network or from the internet.

Recommended instructions for cybersecurity controls:

- Use known source USB for exporting data.
- Only a qualified technician is allowed to update the software version.
- Software updating requires authentication.
- Update the autoclave software to the latest version as recommended by the manufacturer.

Note: The autoclave software is stand-alone and does not require connecting to the internet.

2. Protective features

The autoclave control system includes the autoclave main application and a dedicated agent for cybersecurity and IoT (remote connection capabilities).

The autoclave application contains functionalities for cybersecurity such as: data integrity, electronic signature check, data encryption and decryption, file structure checks, authentication, and authorization mechanism.

A dedicated agent for cybersecurity is used for security, detection & prevention, software updates and data exports. The agent reports to an external secured dashboard server.

3. Backup

The following information will be displayed per each recorded event:

Username, Time and Date, machine + software details, cycle name, sensor reading during the cycle stages + time stamp, end status of the cycle. · Cycle (data *.cyc file) should be saved during cycle operation.

The device will save cycles history. The cycle files are encrypted and signed and can only be opened by a dedicated software.

4. Infrastructure requirements and secure configuration

The agent for cybersecurity and IoT is installed on the device control system. This agent can prevent detection and cybersecurity threats, as well as, a secure channel with the internet. The secure channel is used to enable remote software installation, device monitoring, exporting and importing settings, and exporting cycles data. The secure channel connects between the device's secured web-server, and the user website on the internet. The user can monitor the device from this website and exchange data as described above. The sterilizer is connected to the internet using Wi-Fi connection.

The connection from the website to the autoclave requires correct authorization and authentication credentials.

The user can monitor the machine and download cycles from the local network.

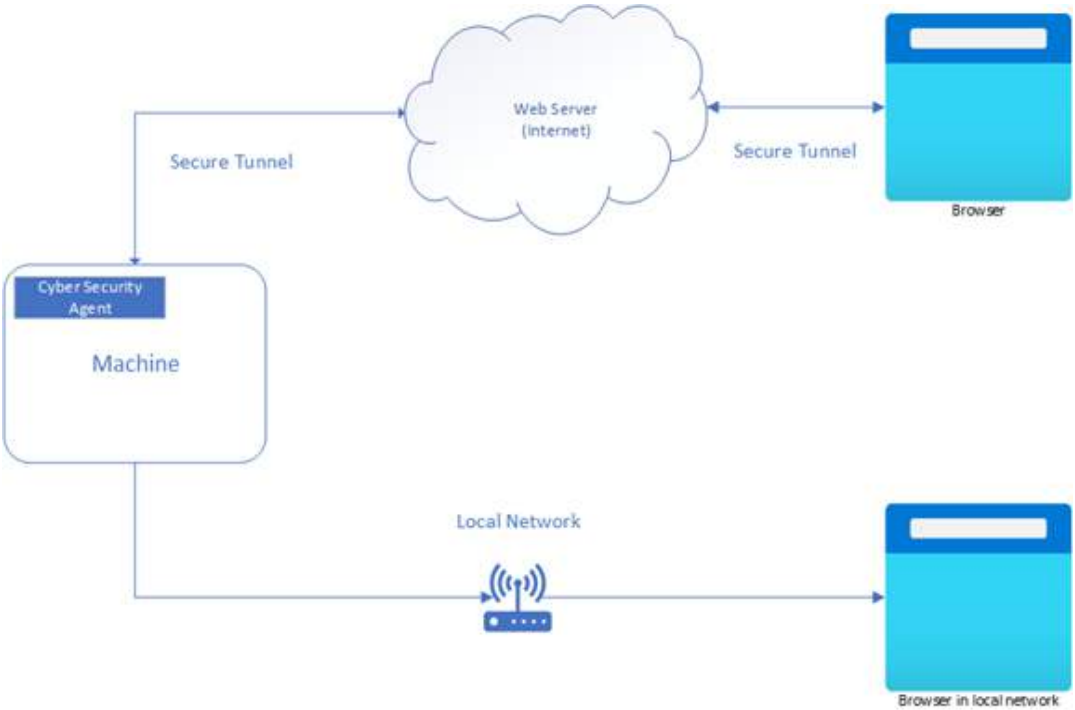

Network Diagram

5. Instructions for users on how to respond upon detection of a cybersecurity vulnerability or incident

If you detect a cybersecurity vulnerability or incident, it is important to take immediate action to minimize the impact and prevent further damage. Here are some steps to follow:

- Disconnect the affected device or system from the network. This will prevent the vulnerability or incident from spreading to other devices or systems.
- Inform the manufacturer and your IT or cybersecurity team as soon as possible. They will be able to assess the situation and determine the appropriate course of action.
- Follow any instructions provided. This may include running scans or performing other actions to secure the affected device or system.

- Change any passwords that may have been compromised. Use strong, unique passwords and different factory codes.
- Keep all software and devices up to date, ensuring that any known vulnerabilities are patched.
- Updates shall be done only by a qualified technician.
- Regularly back up important data to ensure that it is not lost in the event of a cybersecurity incident.

It is important to remain vigilant and take steps to prevent future vulnerabilities or incidents from occurring. This may include implementing security best practices, such as using strong passwords and factory code authentication, as well as regularly updating the software and devices to patch any known vulnerabilities.

3. Depiction of System Parts

3.1 Front View

T-Top 10"

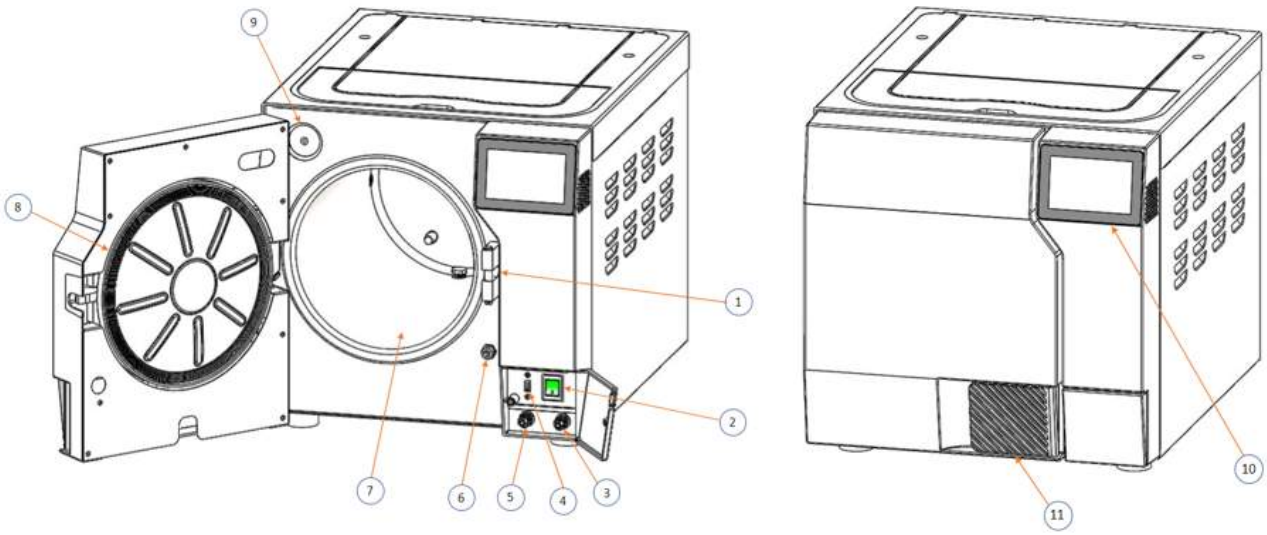

No.	Description	No.	Description
1	Door switch (close)	7	Chamber
2	ON/OFF switch (beneath the service panel)	8	Door gasket
3	Clean water drain (beneath the service panel)	9	Air filter
4	USB port (beneath the service panel)	10	Touch screen
5	Used water drain (beneath the service panel)	11	Door handle
6	Door switch (lock)		

T-Top 11"

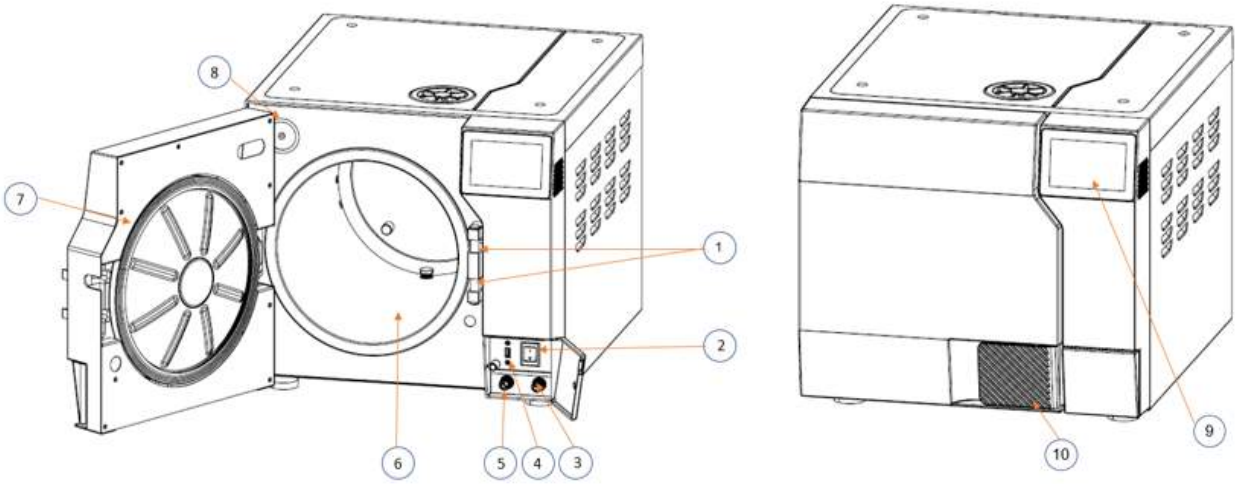

No.	Description	No.	Description
1	Door switch (close)	6	Chamber
2	ON/OFF switch (beneath the service panel)	7	Door gasket
3	Clean water drain (beneath the service panel)	8	Air filter
4	USB port (beneath the service panel)	9	Touch screen
5	Used water drain (beneath the service panel)	10	Door handle

3.2 Top View

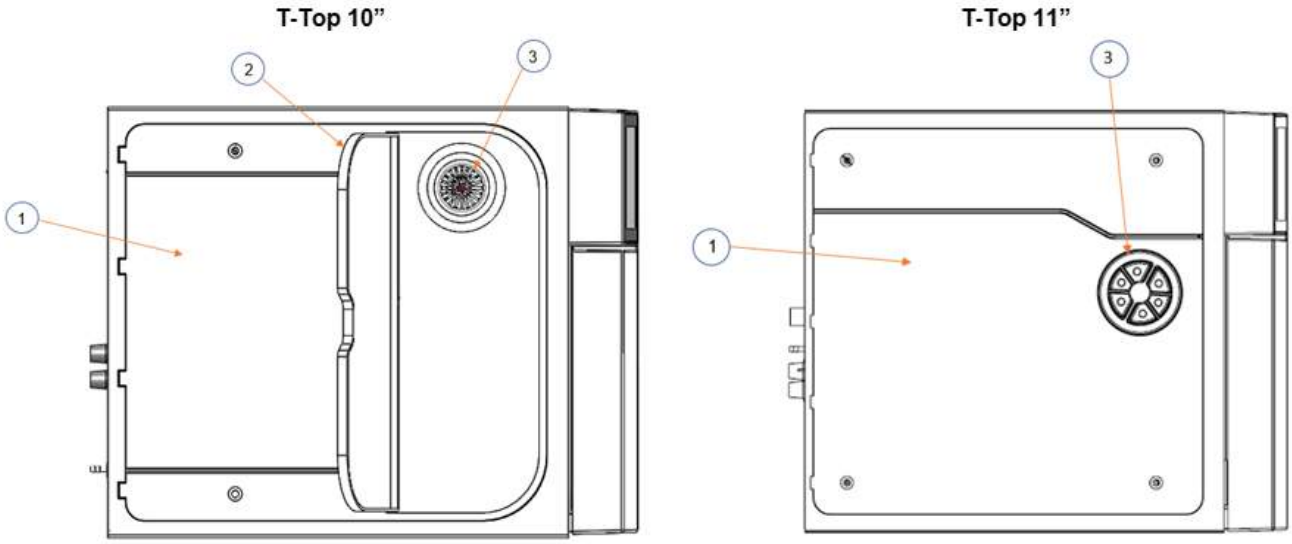

No.	Description
1	Water tank cover
2	Water tank flip cover
3	Mineral-free water reservoir opening

3.3 Rear View

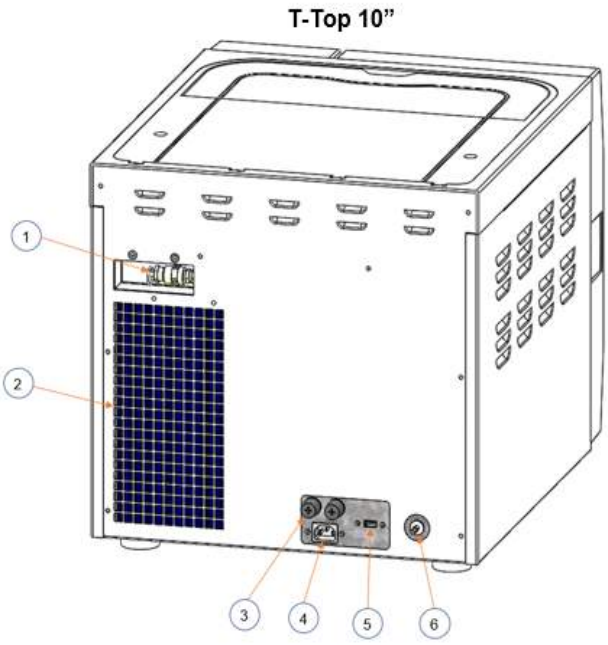

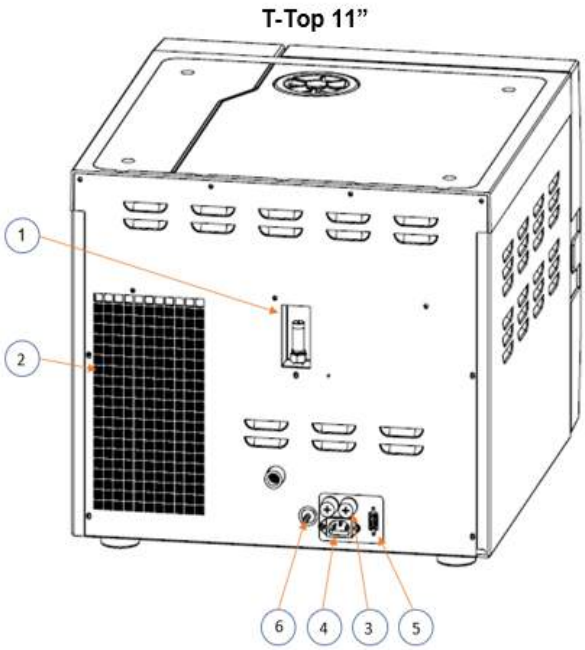

No.	Description	No.	Description
1	Safety valve	4	Power socket
2	Aeration ventilation opening	5	USB port
3	Fuses	6	Used water drain outlet

Warning! Mind the power socket. Keep it and its vicinity dry. Danger of electrocution.

4. Installation Instructions

4.1 Lifting and Carrying

Warnings!

- Only technical personnel having proper qualifications and holding technical documentation (including a Technician Manual), and adequate information are authorized to install and serve the apparatus.
- Before moving the autoclave, make sure that the electric cord is disconnected from the power, and there is no pressure in the chamber.
- Mind the power socket. Keep it and its vicinity dry. Danger of electrocution.
- Drain the water from the reservoir (see section Draining the Reservoirs).
- Do not drop the device!
- To avoid injuries, lifting and carrying should be done with at least two persons or by using a fork-lift or any other mechanical aid.
- For devices that weigh less than 75kg: The device is not designed for use on any standard slide out shelf. If it is necessary to use a slide out shelf, it must be tested and/or rated for 75kg or more.
- Insufficient space for ventilation may result in malfunction or damage due to overheating.

4.2 Device Placement and Operating Conditions

1. The autoclave is intended for indoor use only.
2. Check and verify that the counter carrying the autoclave is a rigid and leveled surface and can carry a load of 75 kg .
3. Check and verify that the dimensions of the surface of the counter are at least 60 cm x 53 cm
4. Keep the back and the sides of the autoclave approximately 10 mm away from the wall to allow ventilation and facilitate the device disconnection.
5. If placed in a cabinet, verify that the rear of the cabinet is open to allow ventilation.
6. It is recommended that enough space be left around the autoclave to give a technician access for servicing the machine.
7. Check and verify that the ambient temperature range is 41ºF (5ºC)-104ºF(40ºC).
8. Check and verify that the ambient relative humidity does not exceed 80%.
9. The operational altitude shall not be over 13123 ft (4000 meters).
10. Ambient pressure shall not be lower than 8.8 psi (60.5 KPa).
11. Operate the autoclave only in the manner specified in the manual. If the equipment is used in a manner not specified by the manufacturer, the protection provided by the equipment may be impaired.

4.3 Connections to Utility Supplies

1. Check and verify that the power supply is as follows:
   230V - 1 phase, 230VAC ±10%, 50/60Hz.
   120V - 1 phase, 120VAC ±10%, 60Hz.
2. Check and verify that the electrical net is protected by a current leakage safety relay.
3. The autoclave is defined as a Class A device, marketed for use in a commercial, industrial, or business environment.

4.4 Storage

After the removal of the autoclave from the package, we recommend the following:

Keep the device dry.

Keep the device away from sunlight and protect it from heat.

4.5 Configuring the Device

Note: Remove all external packaging material before turning ON the device.

1. Plug the power cord into the power socket.

Warning! Mind the power socket. Keep it and its vicinity dry. Danger of electrocution.

3. Turn on the ON/ OFF Switch mounted on the front panel, behind the control door.

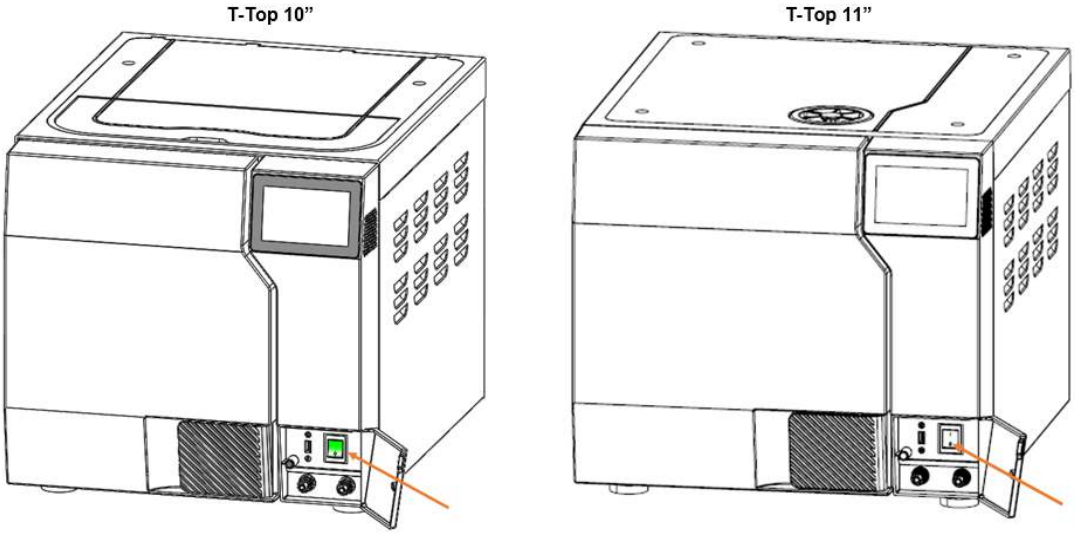

4. When you turn on the autoclave, it will automatically warm up.

Warning! Be careful the surfaces may be hot!

5. Fill the Mineral Free Water Reservoir with water meeting the quality specs (see Water Quality and Filling the Mineral-Free Water Reservoir).
6. Set date and time (see Set date and time).

4.6 Before starting the Autoclave

Note: The device automatically resets the Atmospheric Pressure when turned on.

Open the Autoclave door for 2 minutes and verify that the ambient temperature is below 113°F.

To reset the Atmospheric Pressure manually:

1. In the **Quick Option** screen, press the **Settings** icon , then browse to Maintenance/Reset atmospheric pressure.

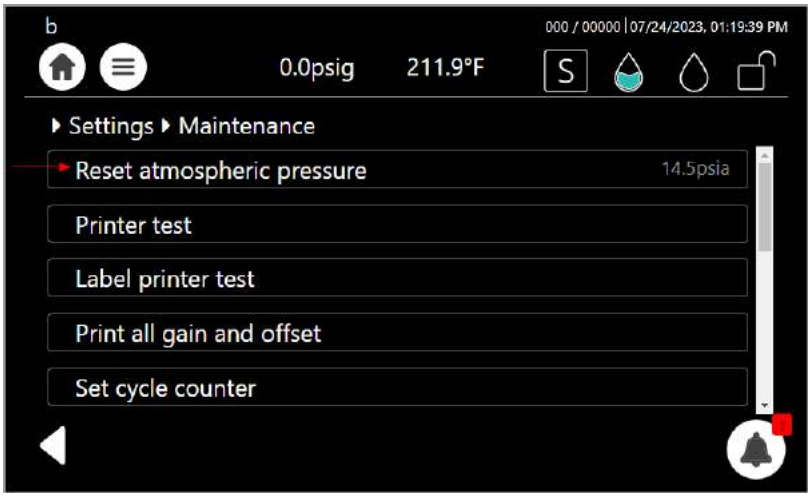

2. In the confirmation screen, press .

Wi-Fi Configuration

Prior to operating the autoclave for the first time, please connect the Wi-Fi and ensure it remains connected at all times.

The Wi-Fi connection is used for uploading all data information from devices in the field, to the online company's server.

This data is used for:

- Monitoring
- Viewing and downloading device history
- Software updates while validating the integrity of the update (applicable for users with Tuttnauer code)

The data is backed-up on the device main board.

Note: In case of connection failure, the data may be exported manually.

To connect the Wi-Fi:

1. In the **Quick Option** screen, press the **Wifi Configuration** option .
2. To enable the connection, press .
3. The **Wifi Configuration** screen is displayed with the available networks.

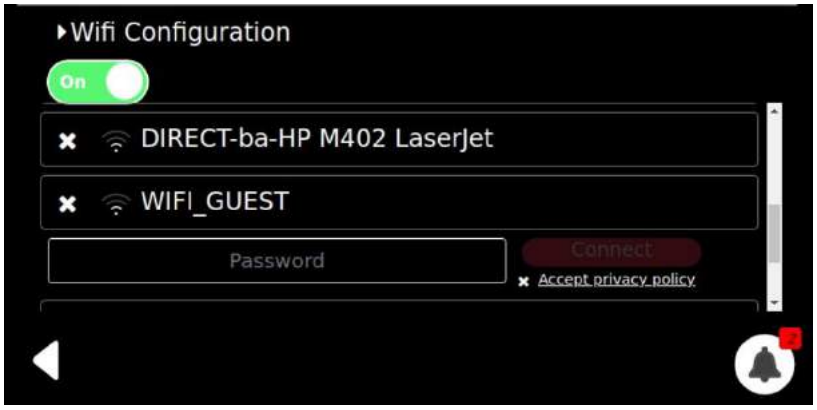

4. Select your network, enter your **Password** and press the **Accept privacy policy**.

5. Press Connect .
6. The Wi-Fi is connected successfully. Press Ok

Checking the device Version information.

1. In the **Quick Option** screen, press the **Info** option .
2. Select the **Version information**.

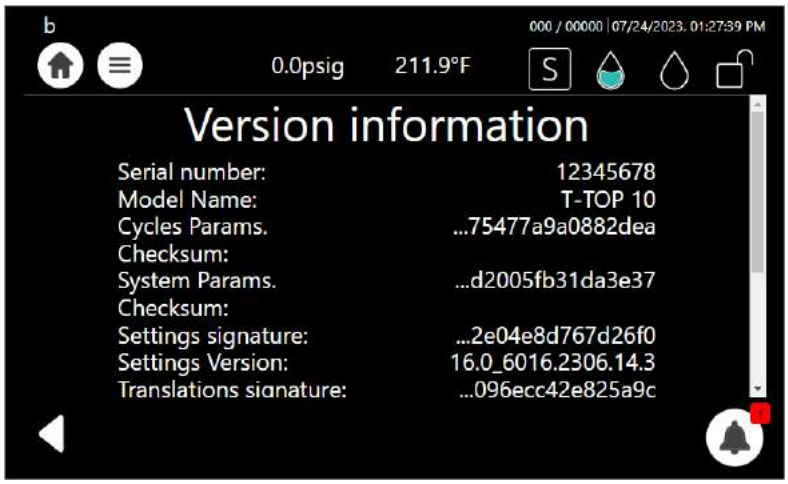

4. Press on the to return to the **Info** screen.

5. Pre-sterilization Cleaning and Disinfection of Instruments and their Loading into the Device

Warnings!

- The instructed Steam Sterilization Program should be verified against the programs available in this autoclave. Verify that you have chosen the appropriate sterilization program.
- When sterilizing materials, make sure that the item can withstand the sterilization temperature.
- Only use the autoclave for products approved for sterilization in an autoclave. Never use the autoclave to sterilize corrosive products or chemicals, such as: acids, bases and phenols, volatile compounds or solutions, such as ethanol, methanol, or chloroform nor radioactive substances.

Consult the Medical Device manufacturer relating adequate and most effective cleaning methods, cleaning agents and disinfection methods.

Disinfection - There are various methods and means for disinfection like soaking in liquid chemical disinfectants or hot water disinfection.

- Check the instructions of the item manufacturer as to the proper procedure for cleaning, disinfecting and sterilizing each item.
- It is recommended that instruments be ultrasonically cleaned using Tuttnauer's Clean & Simple enzymatic cleaning tablets or other suitable solution.
- Follow the instrument manufacturer's instructions on the use of products for cleaning and lubricating instrument that have been ultrasonically cleaned.

Packaging- The target in packing medical items is to assure that the contained goods are sterile and maintaining them sterile till opening the package.

There are various methods and techniques used in preparation and packaging of surgical instruments.

- Be sure that instruments of dissimilar metal (stainless steel, carbon steel, etc.) are separated. Carbon steel instruments should be bagged or placed on autoclavable towels and not directly on stainless steel trays (mixing will result in damage to the instruments or trays from the oxidation of these materials).
- Load items within the boundaries of the tray so that they do not touch the chamber walls or fall off when the tray is moved. Items should not be allowed to touch the walls of the Chamber as the hot metal can damage the item.
- Don't overload the Sterilizer trays (see Specification). Overloading will cause inadequate sterilization & drying.
- Make sure that all instruments remain apart during the sterilization cycle. Surfaces that are hidden because items are covering other items will not be exposed to the steam and will not be sterilized.
- Disassemble or sufficiently loosen multiple-part instruments prior to packaging to permit the sterilizing agent to come into direct contact with all parts of the instrument.
- Verify that packaging methods are in accordance with the good practice approach and the packaging materials used are in agreement with applicable standards.

- Tilt on edge items prone to entrap air and moisture, e.g. hollowware, so that only minimal resistance to air removal exist, the passage of steam and condensate will be met.
- Wrapped instruments should be placed in material which will allow steam penetration and promote drying, such as autoclave bag, autoclave paper, or muslin towels.
- When loading pouches on the tray, put them with paper side up, nylon side towards the tray (see the figures below)

T-Top 10”

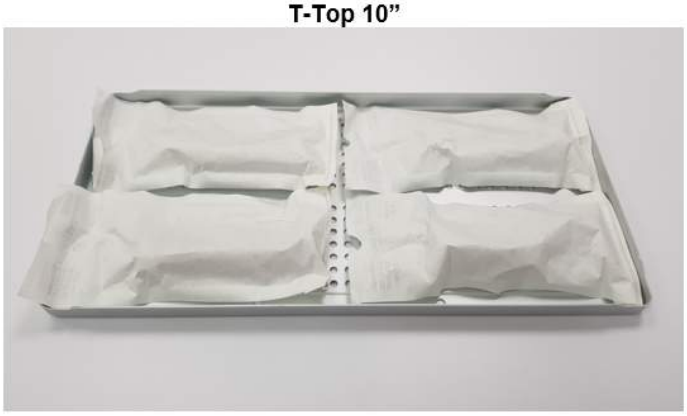

T-Top 11”

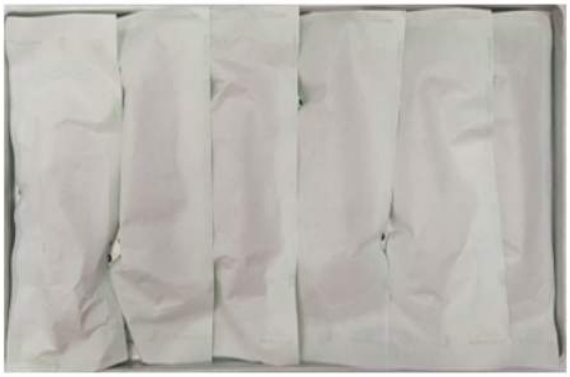

- Tubing should be rinsed after cleaning. When placed in the tray, make sure that both ends of the tubing are open and there are no sharp bends or twists.

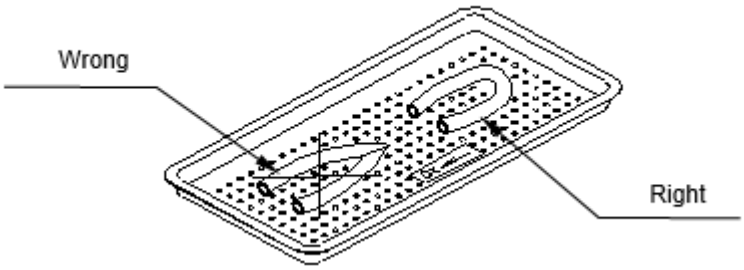

- Cassettes should be placed on the tray rack in place of the trays. They should not be touching each other or the Chamber walls.
- If spotting is detected on the instruments it is necessary to determine if the spot is dirt or rust. The first step would be to use an ordinary eraser to remove the spot. If there is no pitting under the spot, then the spot is only dirt. Dirt spots on an instrument may be an indication that the autoclave needs to be cleaned or that the instruments were not adequately cleaned or dried prior to sterilization. If removal of the spot reveals pitting, then the spot is most likely rust. Rust spots on an instrument are not uncommon on inexpensive instruments. It may also be an indication that the instruments were rinsed in tap water with a high mineral content. These minerals when exposed to high temperature and steam will accelerate the oxidation of the metal. One suggestion would be to final rinse the instruments in a distilled water bath and pat dry to absorb residual water and minerals.
- If the instruments exhibit a discoloration this can be due to the mixing of carbon steel and stainless steel. When these two metals come into contact with each other electrolysis occurs that breaks down the metal. The best solution is to separately wrap the carbon steel instrument to insulate it from other instruments on the tray and the tray itself.

6. Initial Operating Instructions

6.1 Turning on the Device

Plug the power cord into the socket on the rear panel of the autoclave (see the rear view) and into the wall outlet.

Turn on the ON/ OFF Switch mounted on the front panel, behind the control door.

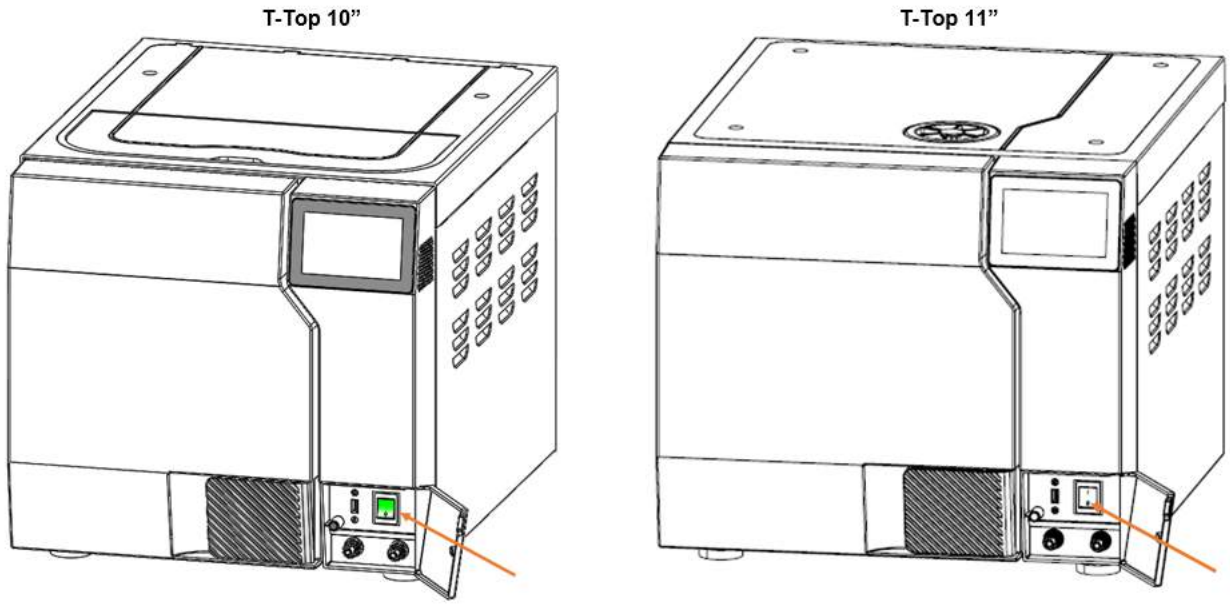

6.2 Filling Water

Cautions!

In the beginning of each day, check the water level in the reservoir.

Note: Improper Water level icon appears when the water reservoir needs to be filled.

A general alarm symbol will appear.

Proper Water level icon appears when the water reservoir is properly filled.

The following screen shows that the Waste water tank is full.

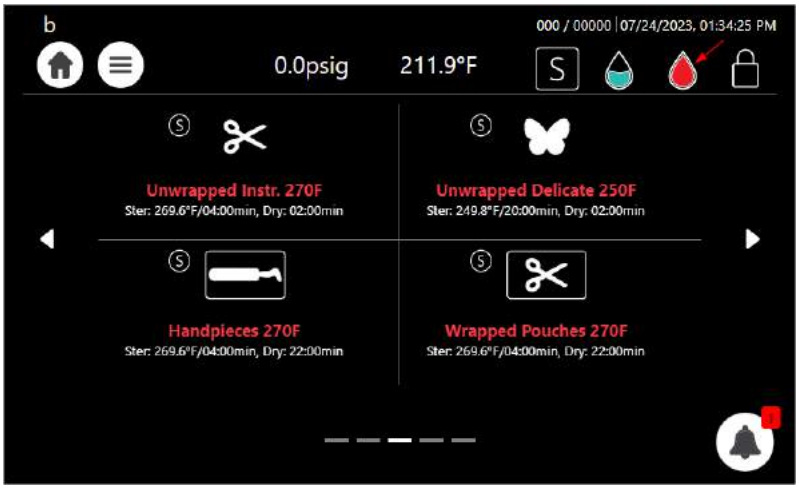

The following screen shows that the Waste water tank is empty.

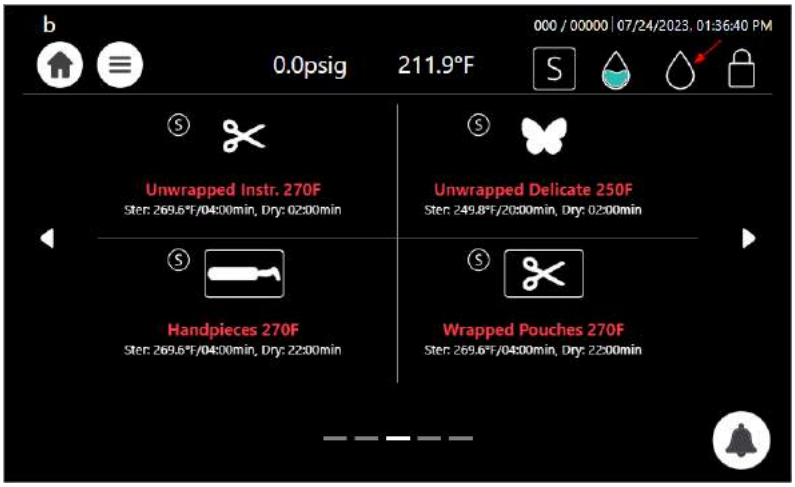

Caution! Before filling the reservoir, verify that the autoclave is idle and there is no pressure in the chamber.

6.3 Filling water in the reservoir

Note: Use only water having the characteristics stated in Water Quality. Using tap water will clog the system and invalidate the manufacturer's warranty.

To fill water in the reservoir:

Lift up the water reservoir cover (see below).

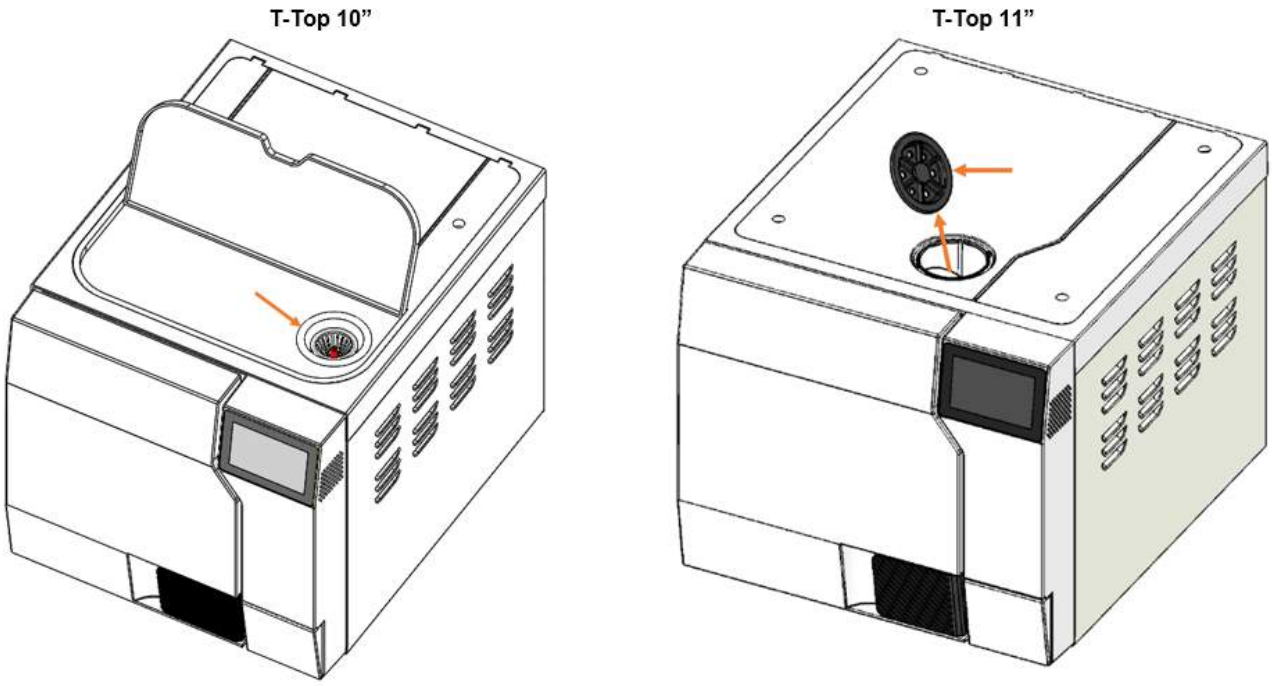

Pour water into the reservoir through the water filter on top of the autoclave unit. Stop filling water as soon as the water level reaches the red plastic handle. In case you fill too much water, it will spill on the counter.

The clean water level indicator will change from a red water droplet symbol to a blue water droplet, as shown below:

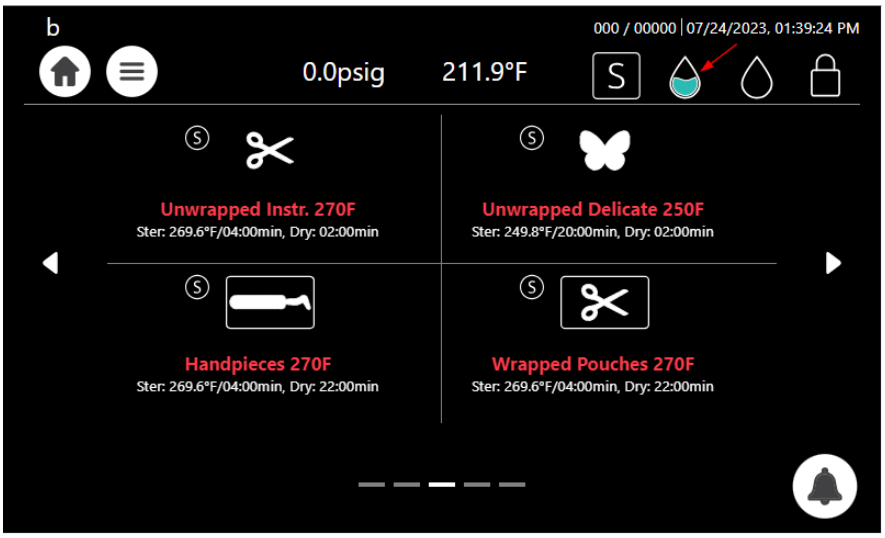

6.4 See the requirements concerning Water Quality, in Section 1.11

6.5 Setting Date and Time

Note: The Initial log-in including setting of drying time as well as other initial parameters will be performed only by a qualified technician upon installation.

On the main screen, press the menu symbol to open the **Quick Option** screen.

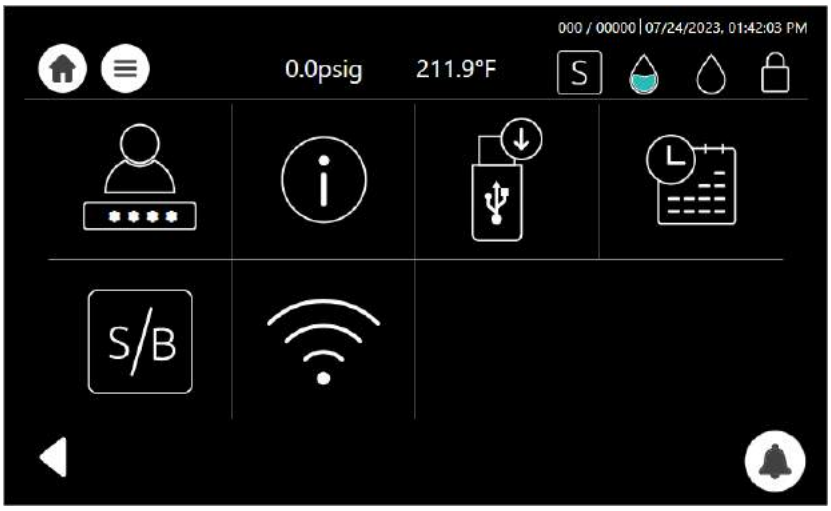

From the **Quick Option** screen, press the **Set Date and Time** icon .

Note: The only functionality to be performed by the user (on a regular basis) is setting the date and time.

Select day, month and year, as depicted:

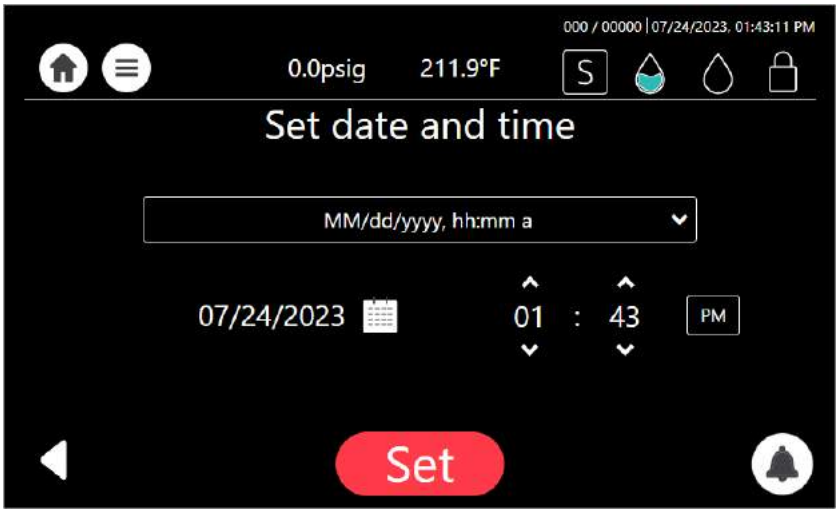

After adjusting the date and time, the system will automatically restart.

6.6 Class S and Class B

Class B: General description

Class B (that conform to the European standard) mainly provides deeper vacuum in the autoclave chamber than Class S, therefore, includes a more complete air removal from the most difficult load types. It allows the system to perform vacuum in difficult hollow or porous instruments and perform effective sterilization of these materials.

Class S: General description

Class S used in the USA obtain weaker vacuum level and is less effective than Class B in the sterilization of hollow instruments.

The following tables provide:

Table A provides the types of sterilization cycles.

Table B provides the T-Top, Class B sterilization programs.

Table C provides the T-Top, Class S sterilization programs.

Table A — Types of sterilization programs

Class B	Class S
The sterilization of products as represented by the test loads in the standard. For products that lie within the limits specified for the relevant test loads, this includes: solid products porous products wrapped (single and multiple-layer) or non-wrapped	The sterilization of products as specified by the manufacturer of the sterilizer including non-wrapped solid products and at least one of the following: porous products, small porous items bowls and receivers single-layer wrapped products multiple-layer wrapped products

Table B — Class B: sterilization programs

	Cycle Name	Sterilization Temp.
1	Unwrapped Instr. 273F	273.2°F
2	Wrapped Pouches 273F	273.2°F
3	Unwrapped Delicate 250F	249.8°F
4	Wrapped Delicate 250F	249.8°F
5	System Clean	N/A
6	Bowie & Dick / Helix test	273.2°F
7	Vacuum test	N/A

Table C — Class S: sterilization programs

	Cycle Name	Sterilization Temp.
1	Unwrapped Instr. 270F	269.6°F
2	Wrapped Pouches 270 F	269.6°F
3	Unwrapped Delicate 250F	249.8°F
4	Handpieces 270F	269.6°F
5	System Clean	N/A

6.7 Setting Class S and Class B

Your autoclave contains Class S as a standard. If you (the customer) would like to upgrade your system to a Class B, please contact Tuttnauer USA representatives or your dealer. Tuttnauer will ask you for the Class type factor (accessible from the S/B screen). In return Tuttnauer will provide you with a code/password.

After entering the new code password by the customer user, the autoclave will contain now the Class B features.

The following details the procedure to access Class B and how to switch from Class S to B, and from Class B to S.

1. From the **Quick Option** screen press

to select Class B.

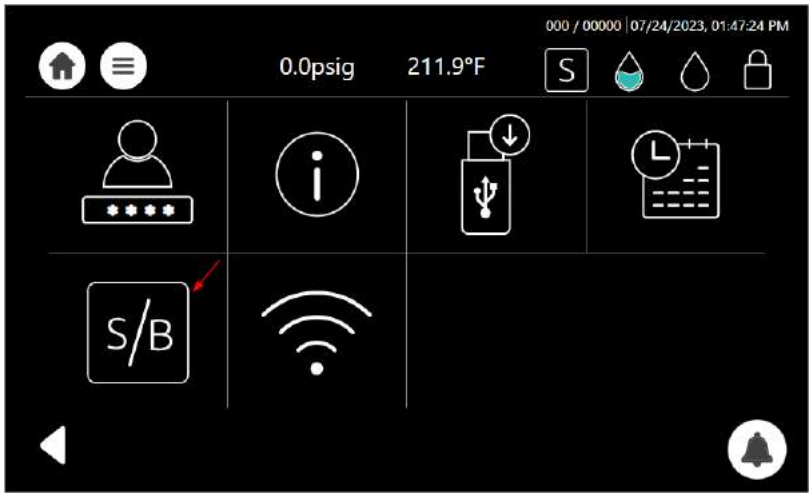

Note: The autoclave presently is in Class S.

2. Press on the required class

type, enter your **Password**, and press **Set**.
3. The **Class Settings** success screen is displayed.

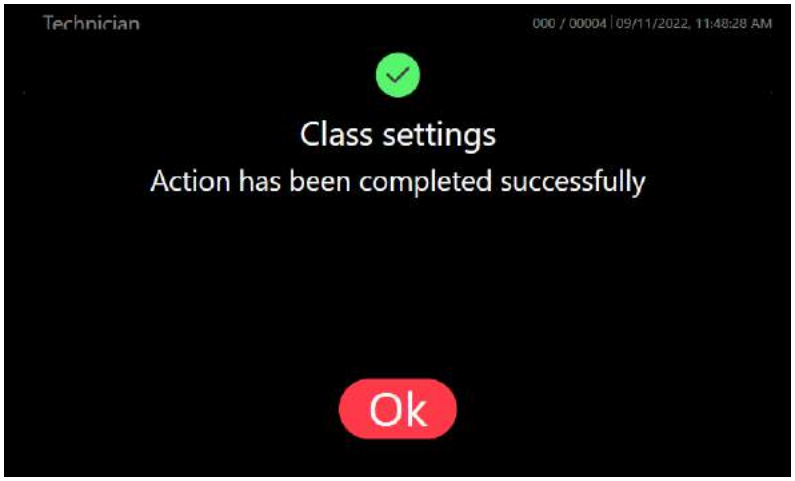

2. Press Ok to complete conversion.

The autoclave is now converted to Class B and the screens displayed will have a Class B identification.

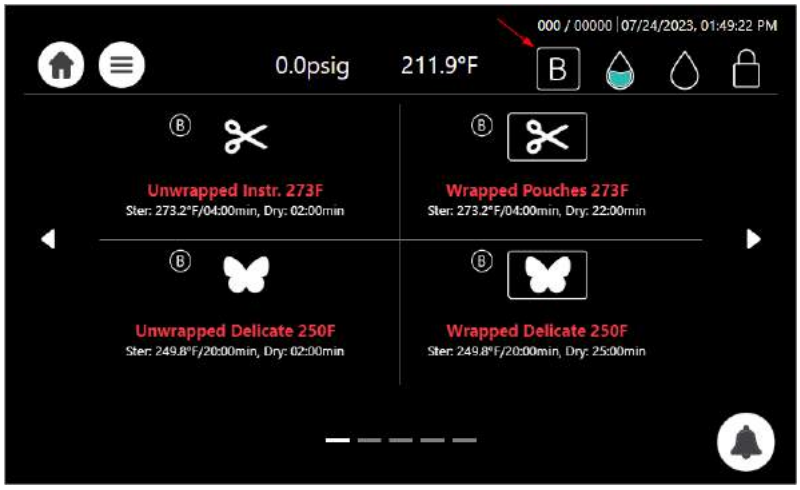

Note: The Class B sign is on the screen header.

The entire autoclave is now in Class B system, a sample of the screens after the conversion to Class B, are shown below:

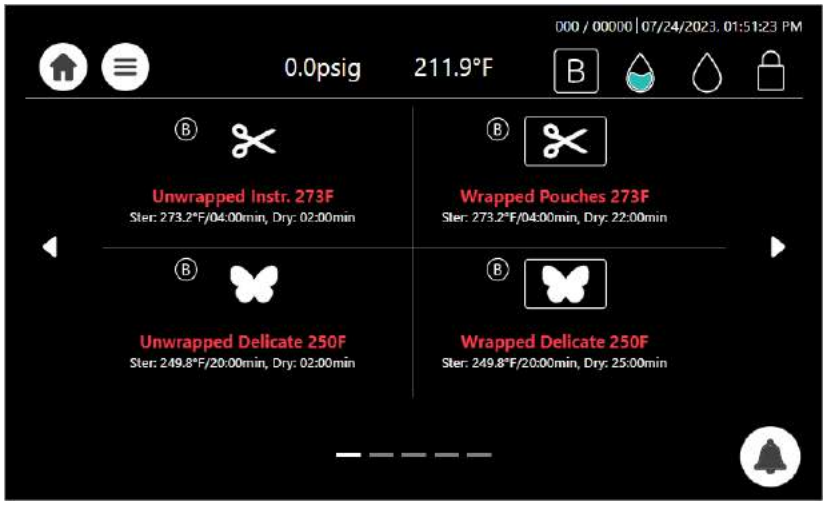

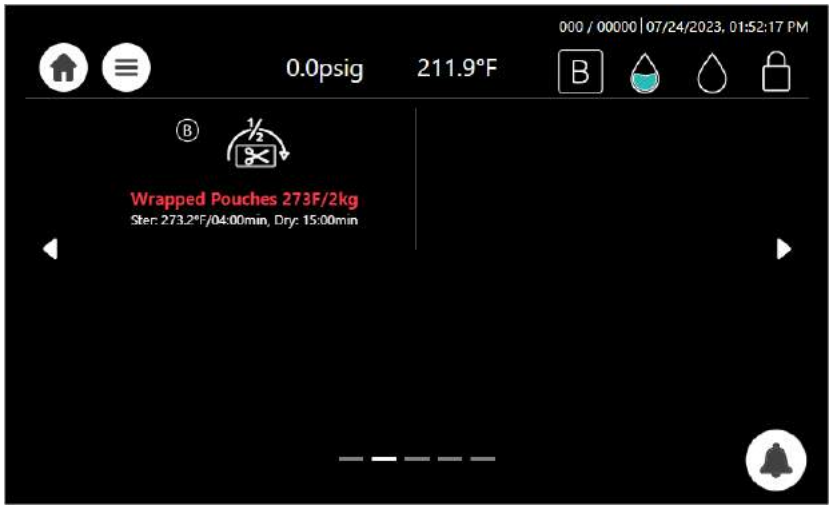

Note: It is possible to switch back from Class B to Class S if desired, following the steps above, by selecting S in step 3 above instead of S&B. Entering the code password is required.

7. Operating Instructions - Control Panel

The display is a graphic Touch screen LCD panel used to display the autoclave current status, any Operational or Error Messages and for operating the machine.

Home screen –Program Select Screen

This screen will be presented when the autoclave is switched on:

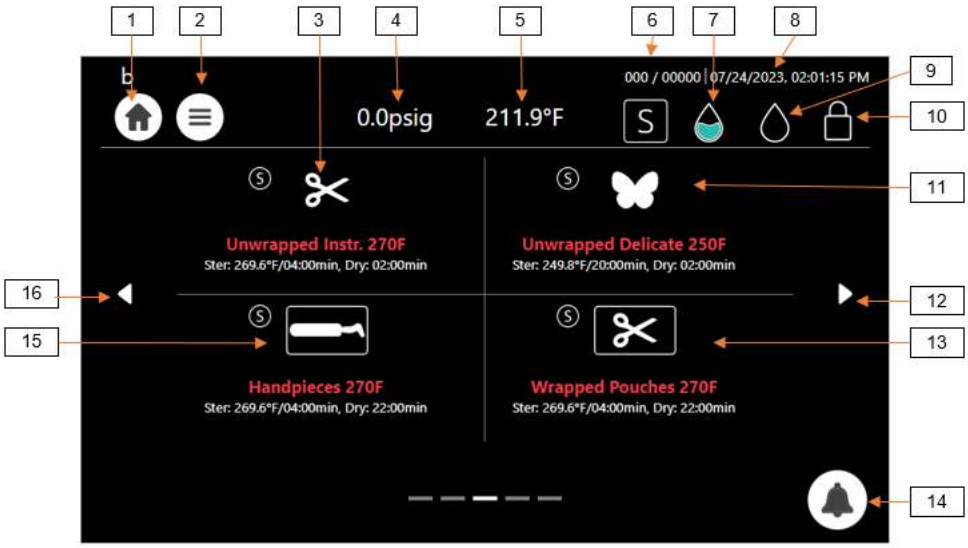

Additional programs are accessible by paging using the side arrows:

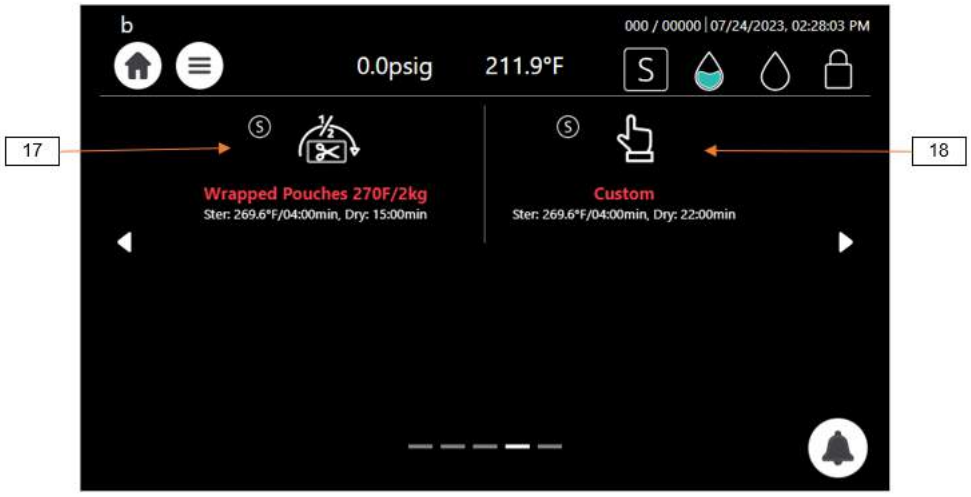

b
000 / 00000 | 07/24/2023, 02:51:15 PM
0.0psig
211.9°F
19
21
Bowie Dick Helix
Ster: 273.2°F/03:30min, Dry: 02:00min
System Clean
Dry: 02:00min
20
Vacuum Test

7.1 Home screen Description and Functions

#	Icon	Name	Description
1		Home icon	Main screen selection icon
2		Menu	Menu selection icon
3		Unwrapped Instr. 270F	Unwrapped Instruments 269.6°F load program
4	0.0psig	Pressure	Momentary Pressure in the chamber
5	211.5 °F	Temperature	Momentary temperature in the chamber
6	001 / 00004	Counter no. ID	Daily / General counters
7		Proper water level (clean water tank)	Sufficient Water in the clean reservoir
8	09/07/2022, 02:53:01 PM	Date and time	Momentary date and time
9		Empty water level (waste water tank)	The Water is empty in the waste reservoir
10		Door condition	Door is closed
11		Unwrapped Delicate 250F	Unwrapped Delicate 249.8°F load program
12		Side arrow right	Paging forward to the next programs
13		Wrapped Pouches 270F	Wrapped Pouches 269.6°F load program

#	Icon	Name	Description
14		Warnings	Indicates the Alerts
15		Handpieces 270F	Handpieces 269.6°F load program
16		Side arrow left	Paging backward to the previous programs
17		Wrapped Pouches 270F/2kg	Wrapped Pouches 270F partial load program
18		Custom	Duplicates a sterilization program and enables modifying the settings. **Note: This is not an FDA approved program!**
19		Bowie Dick Helix	Periodic testing as referred to in ISO 17665-1
20		Vacuum Test	Test program
21		System Clean	System Clean program cleans the autoclave chamber and the water and steam piping
24		Start Cycle By Clock	Gives an option of starting a cycle by clock
25		Add Extra Dry Time	Enables the option of adding extra dry time to a program

7.2 Opening the Device Door

Warnings!

- During loading and unloading use safety gloves and glasses in accordance with local safety regulations and good practice.
- If applicable: Do not remove the top cover during a running cycle. Hot water / steam may exit!

This machine is equipped with an electronic door lock. The door is locked when either the system is running a sterilization cycle, or there is pressure in the chamber, or the power is off.

If you need to open the door after cycle completes, press Confirm:

If the door is not locked, it can be opened as illustrated below.

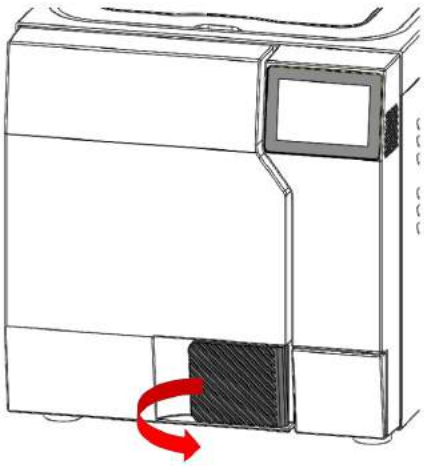

7.3 Starting a Cycle

It is recommended to perform B&D test cycle at the beginning of each working day.

Note: Run the cycle with the tray holder and trays in the chamber.

1. Before each cycle, check visually that the gasket is intact, not loose and clean.
2. Load the autoclave properly (see chapter 5).
3. Choose the appropriate sterilization program.
4. The selected programs are shown below:

Class B

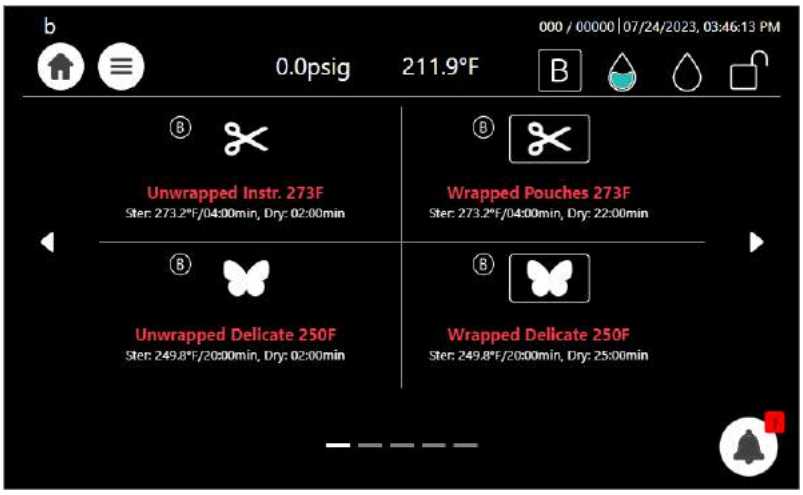

Class S

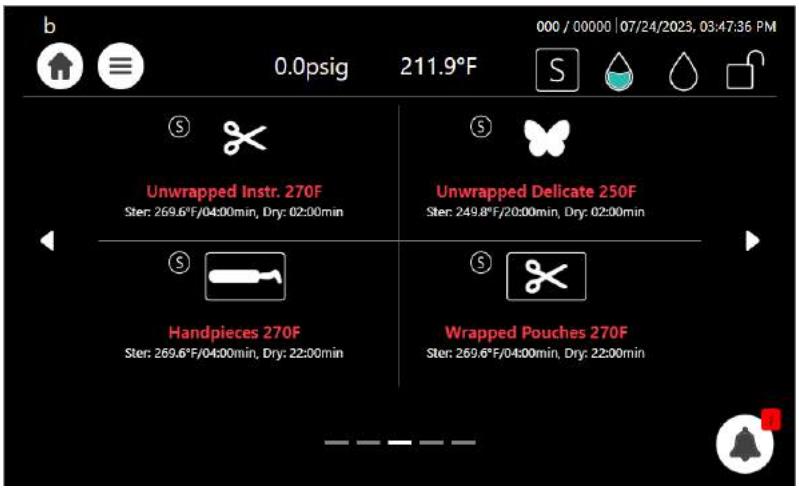

5. The next screen will prompt the selected program information.

6. Close the door by both:
   - Pushing the door gently;
   - Pulling the handle while pushing the door until it comes to the closed position. After the door is closed tightly, press the handle back inward, then release the handle.

When the door is closed, the open-door symbol is replaced with the closed-door symbol , and the door-lock symbol will not appear until initiating a cycle.

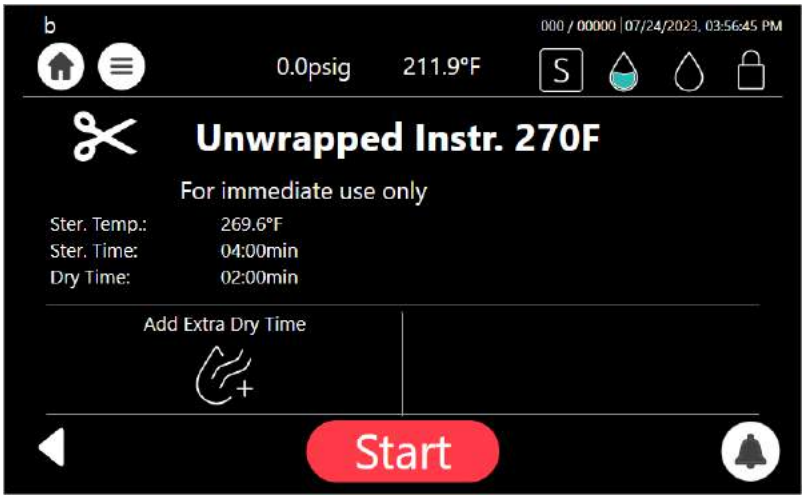

7. Press the Start button to start the cycle.

For cycle process description, see Sterilization Cycle Description.

Warning!

Do not remove the top cover during a running cycle. Hot water / steam may exit!

After pressing start, the sterilization process starts

Screen display while "Unwrapped Instr. 270F" sterilization program is in progress.

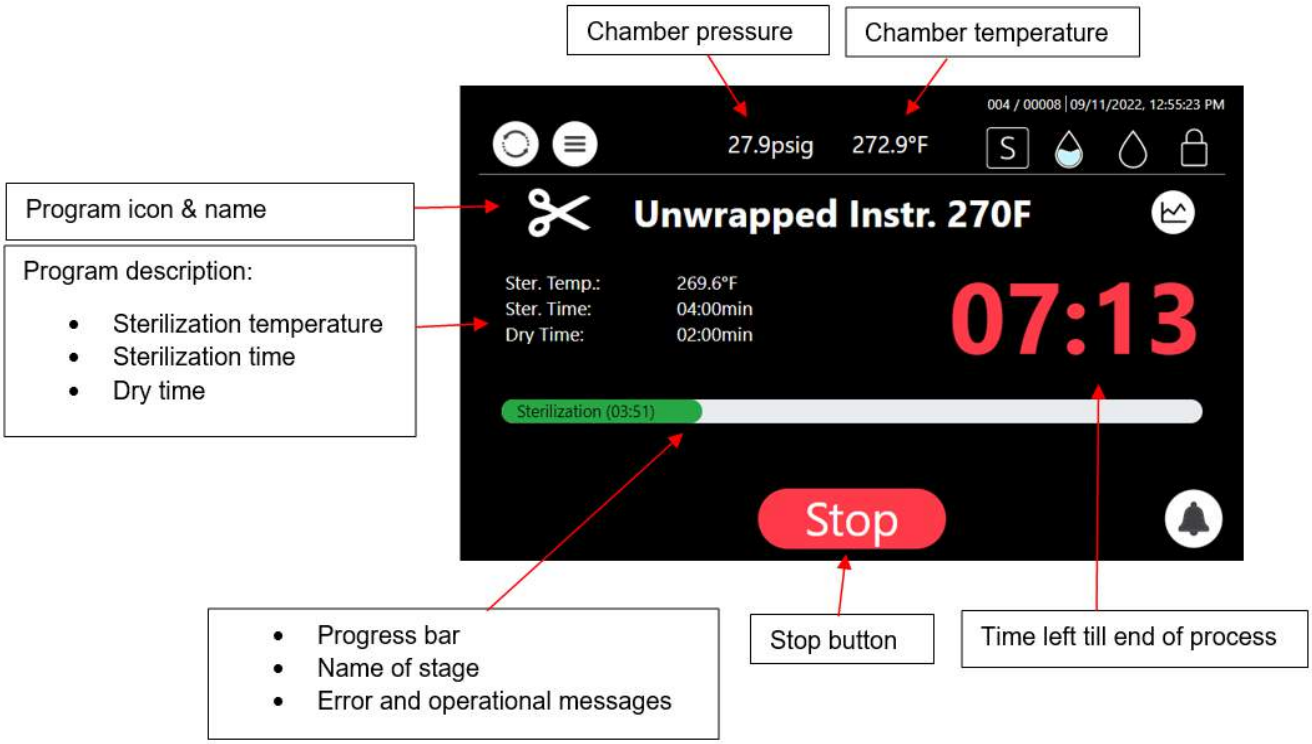

Note: For the results of the cycle, see description in section 7.4

7.4 Available Sterilization Programs and Test Programs

Class B

#	Icon	Name	Temp	Sterilization time (minutes)	Dry time (minutes)		Load type	Type of use
					T-Top 10	T-Top 11		
1		Unwrapped Instr. 273F	273.2°F	4	2 (default) Range: 0-99	2 (default) Range: 0-99	Unwrapped Instruments (Unwrapped Solid)	Immediate use only
2		Wrapped Pouches 273F	273.2°F	4	22 (default) Range: 0-99	26 (default) Range: 0-99	Handpieces, Wrapped Instruments (wrapped solid), Textile (fabric packs), porous	For storage
3		Unwrapped Delicate 250F	249.8°F	20	2 (default) Range: 0-99	2 (default) Range: 0-99	Unwrapped Instruments (Unwrapped Solid)	Immediate use only
4		Wrapped Delicate 250F	249.8°F	20	25 (default) Range: 0-99	30 (default) Range: 0-99	Wrapped Instruments (wrapped solid), Textile (fabric packs), porous	For storage
5		Wrapped Pouches 273F/2kg	273.2°F	4	15 (default) Range: 0-99	15 (default) Range: 0-99	Handpieces, Wrapped Instruments (wrapped solid), Textile (fabric packs), porous	For storage
6		Bowie Dick Helix	273.2°F	3.5	2 (default) Range: 0-99		Chemical Indicator in a product challenge device	Periodic testing as referred to in ISO 17665-1
7		Vacuum Test	N/A	N/A	Vac. Stable Time 1 = 5min Vac. Stable Time 2 = 10min		Empty	Not applicable
8		System Clean	N/A	N/A	N/A		Empty	Periodic cleaning

Class S

#	Icon	Name	Temp	Sterilization time (minutes)	Dry time (minutes)		Load type	Type of use
					T-Top 10	T-Top 11		
1		Unwrapped Instr. 270F	269.6°F	4	2 (default) Range: 0-99	2 (default) Range: 0-99	Unwrapped Instruments (Unwrapped Solid)	Immediate use only
2		Unwrapped Delicate 250F	249.8°F	20	2 (default) Range: 0-99	2 (default) Range: 0-99	Unwrapped Delicate Instruments (Unwrapped Solid)	Immediate use only
3		Handpieces 270F	269.6°F	4	22 (default) Range: 0-99	26 (default) Range: 0-99	Handpieces	For storage
4		Wrapped Pouches 270F	269.6°F	4	25 (default) Range: 0-99	26 (default) Range: 0-99	Handpieces, Wrapped Instruments (wrapped solid)	For storage
5		Wrapped Pouches 270F/2kg	269.6°F	4	15 (default) Range: 0-99	15 (default) Range: 0-99	Handpieces, Wrapped Instruments (wrapped solid)	For storage

Note:

At the end of the cycle, visually inspect and verify that the instruments are dry.

If moisture is detected on the instruments, increase the dry time by clicking , before restarting the cycle.

7.4.1 Maximum Load Weight per Load Type

Warning!

Do not overload! Exceeding the maximum load weight (see Class B and Class S tables below), may result in moist instruments, consequently leading the user to increase the dry time.

Class B

Load type	Maximum load weight T-Top 10	T-Top 11	Suitable for programs
Textile, porous	~3 lbs (1.5kg)	~4.4 lbs (2.0kg)	Wrapped Pouches
Handpieces	5 units		Handpieces
Solid Unwrapped	~13 lbs (6.0kg)	~20 lbs (9.0kg)	Unwrapped
Solid Wrapped	~8 lbs (3.6kg)	~12 lbs (5.4kg)	Wrapped

Class S

Load type	Maximum load weight T-Top 10	T-Top 11	Suitable for programs
Handpieces	5 units		Handpieces
Solid Unwrapped	~13 lbs (6.0kg)	~19.8 lbs (9.0kg)	Unwrapped
Solid Wrapped	~8 lbs (3.6kg)	~12 lbs (5.4kg)	Wrapped

7.4.2 Description of the Sterilization Cycle Stages

Air-removal stage: Pre vacuum pulses are performed. For wrapped cycles, there are 2-3 pulses and the vacuum are deeper.

Heating stage: steam is inserted into the chamber until the sterilization temperature is reached.

Sterilization: sterilization temperature is maintained constant during the sterilization time.

Exhaust: steam is exhausted out of the chamber at a fast rate until pressure decreases to ambient pressure.

Drying: performed with the door closed by pulling vacuum and using the accumulated heat in the chamber and the load to remove leftover moisture from the instruments and wraps.

7.4.3 Description of the Vacuum Test Stages

Vacuum is produced in the chamber, down to P1=2.17 psi (15 kPa.) At this stage all the valves close. The autoclave remains in this stage for 5 minutes. This period enables the condition in the chamber to reach equilibrium. After the 5 minutes have elapsed, the cycle ‘history record’ records the pressure that is referred to as P2. At this point the test begins and lasts 10 minutes. At the end of the test, the cycle ‘history record’ records the results. The pressure at the end of the test is referred to as P3.

Notes:

- During the test period the autoclave is not heated. Even if the vacuum test is completed, the operator shall check the test results and consider whether the test results are acceptable or not.
- Perform the Vacuum Test on a completely dry chamber. Preferably following a cycle with a Drying procedure i.e., a Wrapped cycle, and after the Chamber was cooled i.e., Sleep mode/Turned off.

7.4.4 Description of Bowie-Dick Test Stages

Air-removal stage: vacuum pulses are performed.

Heating stage: steam is inserted into the chamber until the sterilization temperature and pressure are reached.

Sterilization stage: temperature and pressure are maintained constant at the pre-set level for sterilization time.

Fast exhaust stage: steam is exhausted out of the chamber at a fast rate until pressure decreases to ambient pressure.

Drying stage: heating of chamber followed by a vacuum break (air inlet) to remove leftover moisture from the instruments and wraps. Air inlet to reach atmospheric pressure.

7.5 Cycle Succeeded / Cycle Failed Notifications and Follow-on

7.5.1 Cycle Succeeded

When the cycle has ended successfully, the following "Successful" message is displayed:

Push the confirm button Confirm to confirm the "Successful" message. Proceed to chapter "Opening the door and Unloading".

7.5.2 Cycle Failed

In the event of a failure at any stage, the exhaust valve will be opened to release pressure from the chamber, the message "Fail" and a relevant failure message will be displayed on the screen:

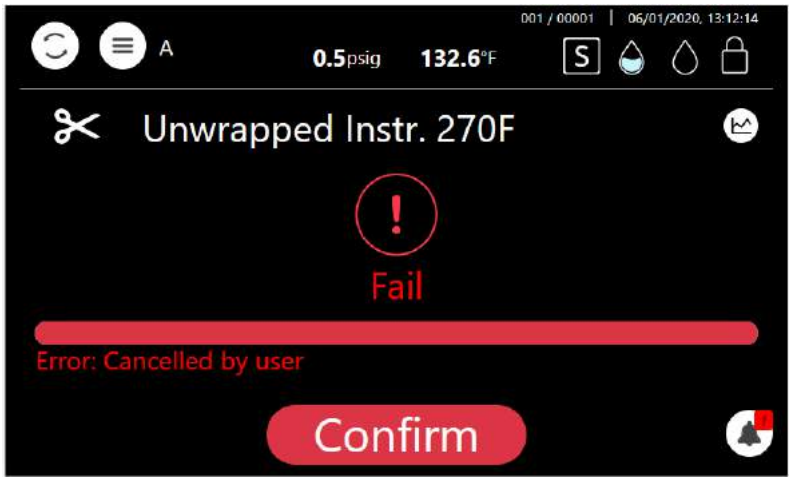

Warning!

The load has not completed a sterilization cycle; therefore, it is not sterile. Handle it as a contaminated load.

Any failure means that the load is not sterile.

7.6 Aborting a cycle

It is possible to stop the cycle while the autoclave is operating. Press Stop at any stage (except exhaust) of the process to stop the operation.

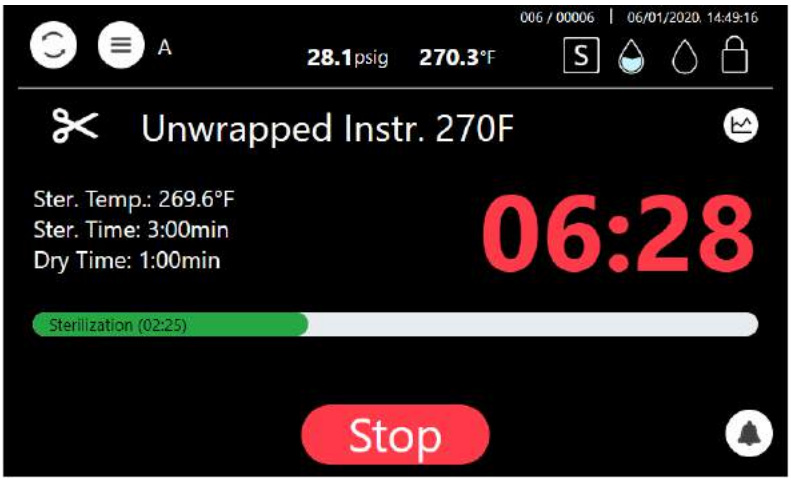

If the cycle is aborted, the load is not sterile. A “fail” message will be displayed with an error message explaining the reason for the failure. An alternating buzzer signal will sound to notify the user.

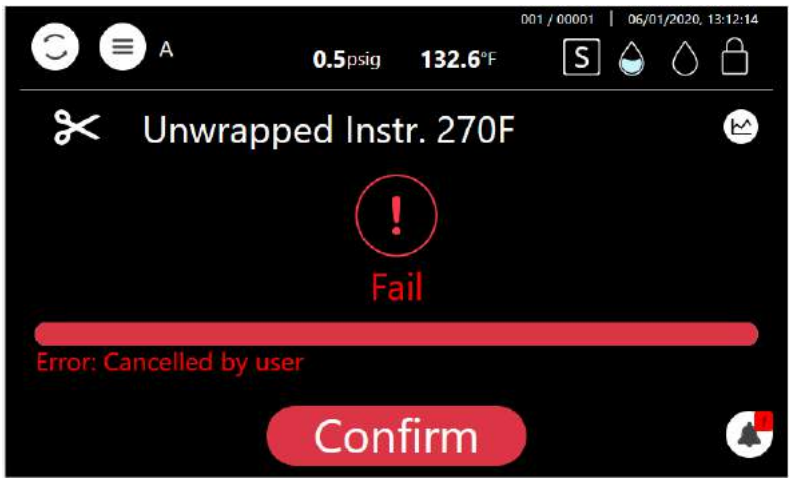

Press the Confirm button to confirm the displayed message.

Warning!

The load has not completed the cycle; therefore, it is not sterile. Handle it as a contaminated load.

7.7 Custom Programs

Custom programs are not FDA approved!

Validation of the sterilized cycle is the user's responsibility.

T-Top offers the user a customized program, adjusted in order to sterilize items that cannot be sterilized in any of the preceding default programs.

To utilize a customized program:

Have your dealer or service technician create a customized program. This can be done by duplicating one of the preinstalled programs.
The new program becomes a customized program with a new name (per customer's request), a unique icon , and specific settings are available for modification.

1. Select from the Home screen, the Custom program.

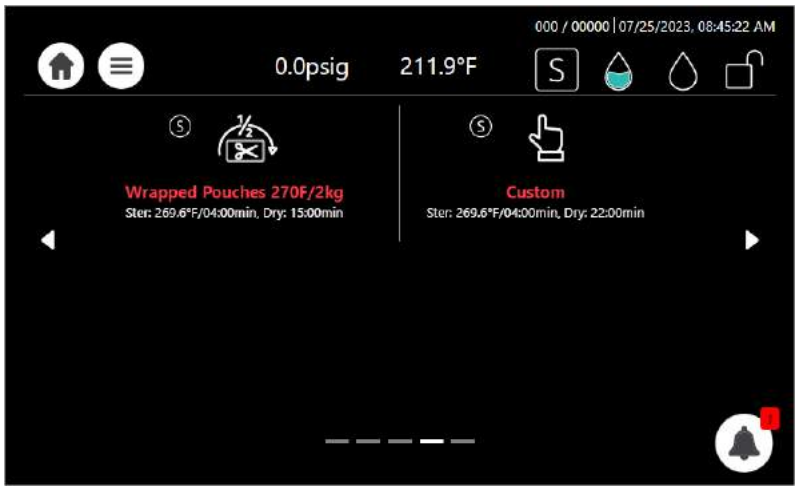

2. The Custom program is displayed below with the modified settings.

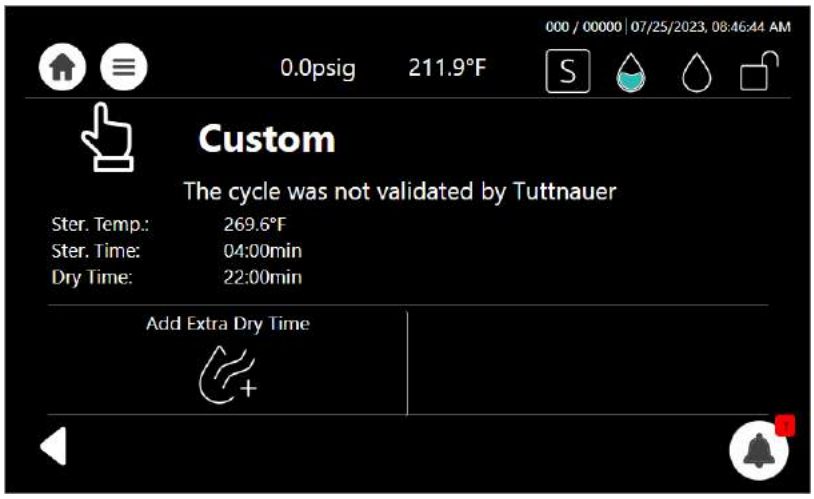

3. Press Start to begin the customized cycle.

7.8 Cycles history

The Cycles history menu enables printing a specific cycle.

- On the Quick Option screen, press the Settings icon , then browse to Advanced options / Handle cycles / Cycles history

The following screen is displayed with the status of the cycle.

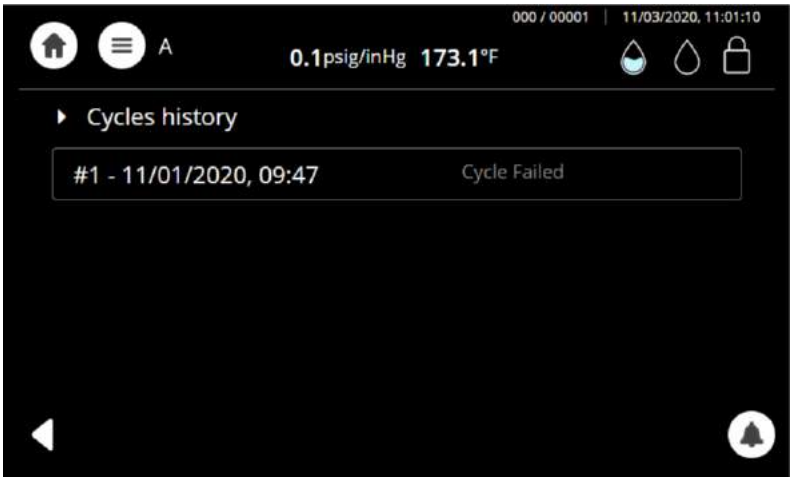

If you select a cycle history from the screen above, a Cycle content screen appears

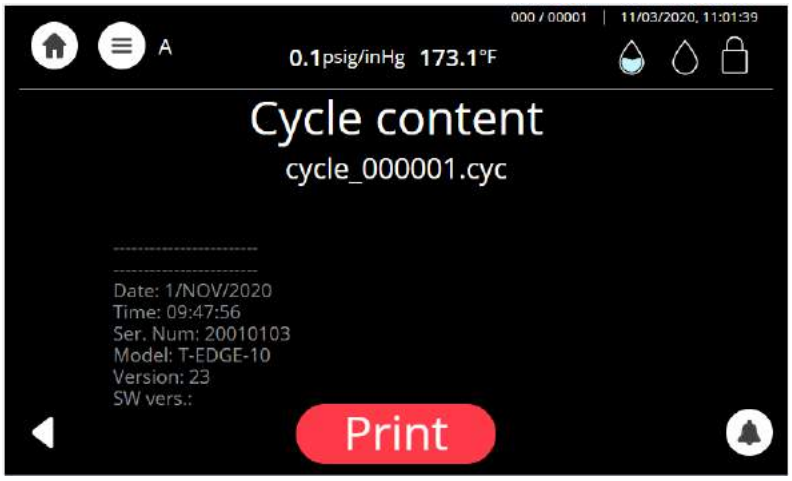

Press Print to receive the entire printout of the selected cycle history.

7.9 Opening the door and Unloading

1. Press Confirm to confirm the "Successful" or the "error" message to unlock the door.
2. Open the door.
3. Use the tray handle or wear heat-resistant gloves to remove the load from the autoclave.
4. After unloading, visually inspect the load to ascertain that it is dry, and that sterilization indicators have made the required color change.

7.10 Checking Waste Water Level

When the waste water level is high, the general alarm symbol will appear. A relevant text alarm will appear in the alarms list. This situation is normal, but the operator cannot run a new cycle before draining the waste water reservoir (see Draining the Reservoirs in section 7.11).

7.11 Draining the Reservoirs

Warnings!

- **Never reuse waste water.**
- Waste water should be brought into the public net in accordance with the local rules or requirements i.e ONLY NON-HAZARDOUS LIQUIDS SHALL BE DISPOSED IN PUBLIC SEWAGE!

This procedure applies to the mineral-free water reservoir (left) and to the waste-water reservoir (on the right).

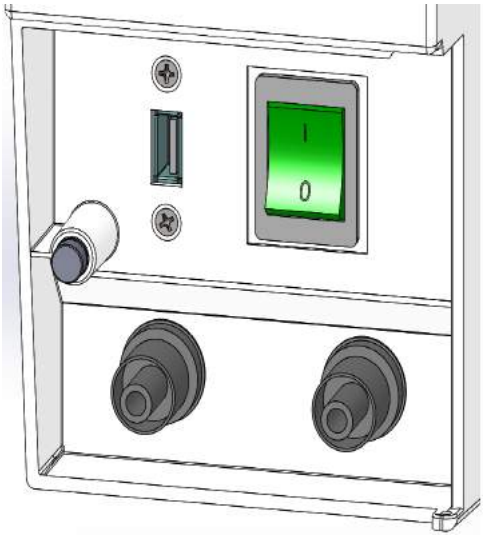

Note: Improper Water level icon appears when the water reservoir needs to be filled or drained.

The drain valves are located on the front right side of the autoclave behind the control door .

To drain the reservoir:

1. Remove the blue socket cap.

2. Attach one end of the plastic hose (supplied with the autoclave), to the clean water outlet.

3. Put the other end of the hose into a drain bucket.
4. Open the valve by turning it counterclockwise.
5. When the water reservoir is empty, close the valve by turning it clockwise and remove the hose. Return the socket cap.

   Caution! Never reuse waste water.
6. If the drained reservoir is the clean-water reservoir, fill the reservoir with distilled water until it reaches the full level. (Approximately 3.6 liters).

The autoclave is now ready for use.

7.11.1 Waste water draining

Caution! Waste water should be brought into the public net in accordance with the local rules or requirements i.e ONLY NON-HAZARDOUS LIQUIDS SHALL BE DISPOSED IN PUBLIC SEWAGE!

Connect the autoclave's drain to the building’s drainage pipe. The drainage shall be of an open type, withstanding temperature of, at least, 140ºF.

8. Preventive and Scheduled Maintenance to be performed by the Operator

The maintenance operations described in this chapter need to be followed as indicated to keep the device in good working condition and to keep any breakdown time to a minimum.

Should the need arise, technical assistance or a service technician can be requested by either calling your dealer or Tuttnauer U.S.A.

8.1 Daily Maintenance

Caution!

Make sure the autoclave is not hot before cleaning it.

- Turn the unit on momentarily to allow the door to be opened. Open the door, unplug the autoclave again, and proceed with cleaning.
- Clean door gasket with a mild detergent, water and a soft cloth or sponge. Check visually that the gasket is intact, not loose and clean.

8.2 Weekly Maintenance

Caution!

Make sure the autoclave is not hot before cleaning it.

- Turn the unit on momentarily to allow the door to be opened. Open the door, unplug the autoclave again, and proceed with cleaning.
- If the autoclave is only used occasionally, drain the water from the mineral free water reservoir once a week, and refill with fresh mineral-free water or distilled water.
- Once a week or if a text alarm of ‘full waste water reservoir’ appears (whichever comes first) drain the water from the waste water reservoir.
- Clean the outer parts of the autoclave with a soft cloth.

8.2.1 System Clean

Once every 2 weeks perform system clean process per section 11 .

8.3 Monthly Maintenance

Caution!

Make sure the autoclave is not hot before cleaning it.

- Turn the unit on momentarily to allow the door to be opened. Open the door, unplug the autoclave again, and proceed with cleaning.
- Clean and descale the chamber.
- Clean the outer parts of the autoclave with a soft cloth.
- Clean the Drain filter of the autoclave.

8.4 Periodic Maintenance

Caution! Make sure the autoclave is not hot before cleaning it

1. Replace the air filter, every 6 months or after 1000 cycles (whichever comes first).
2. Every 3 months check the door gasket for any signs of physical damage and ask the technician to replace it if there is tear or leakage.

8.4.1 Replacing the Air Filter

Cautions!

Before proceeding, make sure that the electric cord is disconnected and there is no pressure in the chamber.
Use scissors to open the filter bag and not sharp blades or pointed instrument.
Check that the new filter has not exceeded the maximum shelf life.
Carefully un-pack the new filter and examine it for any signs of damage.
Remove any protective packaging before inserting the filter into place.

The AIR filter is located, when opening the door, in the upper left corner .

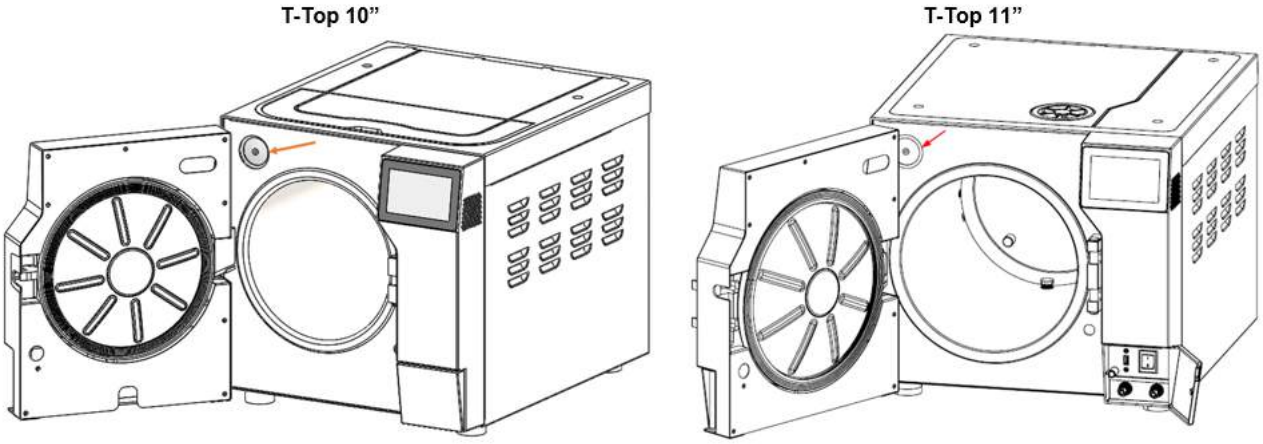

1. Pull out the filter.
2. Connect the new filter.
3. Ensure the new filter is all the way in and seated properly.

Note: Make sure that the arrow on the filter body points inwards, toward the chamber. Make sure that you don’t bend the filter pipe when reattaching it.

8.4.2 Cleaning the Drain Filter

Cautions!

Make sure the autoclave is not hot before cleaning it

Before proceeding, make sure that the electric cord is disconnected and there is no pressure in the chamber.

1. Clean the drain filter every month.
   The drain filter is located inside the autoclave chamber at the bottom far end. To reach the filter, open the chamber door and remove the tray holder.

2. Open the autoclave chamber door and remove the tray .

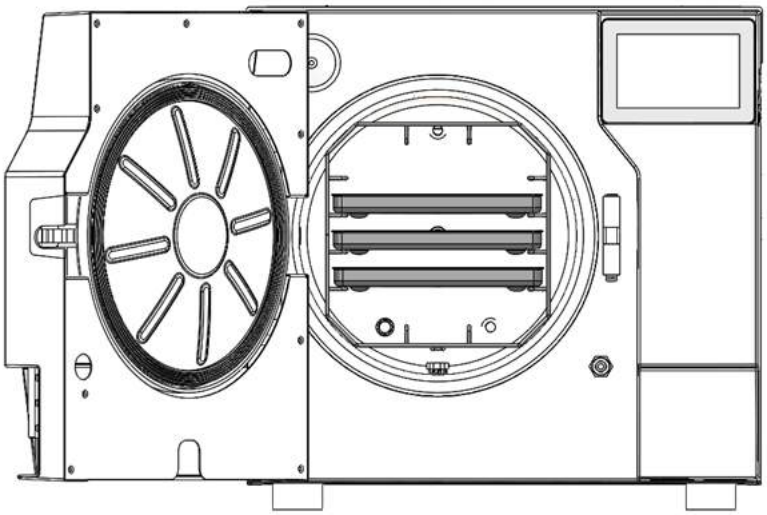

3. Clean with a soft cloth the filter and the area around the filter.

4. Check that the autoclave functions normally after the drain filter cleaning.

Note: If by cleaning the filter the result is not satisfactory, proceed to the replacement of the drain filter. (paragraph 8.4.3).

8.4.3 Replacing the Drain Filter

Note: If after successive cleaning of the filter the result is not satisfactory proceed to the replacement of the drain filter.

Cautions!

Before proceeding, make sure that the electric cord is disconnected and there is no pressure in the chamber.
Use scissors to open the filter bag and not sharp blades or pointed instrument.
Carefully un-pack the new filter and examine it for any signs of damage.
Remove any protective packaging before inserting the filter into place.

Caution! Make sure the autoclave is not hot before cleaning it.

The drain filter is located inside the autoclave chamber at the bottom far end. To reach the filter, open the chamber door and remove the tray holder.

1. Open the autoclave chamber door and remove the tray.

2. Unscrew the old Drain filter assembly (screw + net).

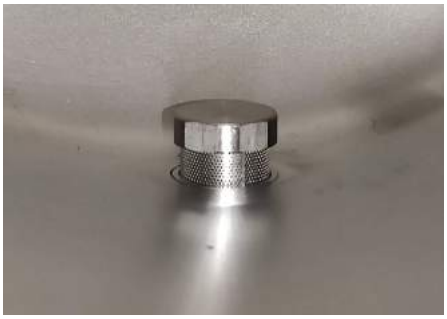

3. Screw the new Drain filter assembly, (screw + net) to its place in the chamber bottom, tighten it **manually**.

4. Place the tray back.

9. Full List of Informative Screen Display Symbols, Operating Messages, Error Messages and Troubleshooting

The troubleshooting section is provided in order to enable the user to solve minor malfunctions, prior to contracting our service department.

However, only technical personnel having proper qualifications and holding technical documentation (including a technician manual) and adequate information are authorized to serve the apparatus.

9.1 Symbols

Symbol / Message	Symbol / Message Description	Required Action (if applicable)
	This symbol is displayed when the door is open. **Note:** The inherent safety feature of the machine enables the user to choose a cycle only when the door is open.	Informative symbol
	This symbol is displayed when the door is closed. **Note:** The machine has an inherent safety feature that prevents the cycle from starting if the door is not closed.	Informative symbol
	Low water level (Clean water tank)	Fill the mineral free water reservoir until this symbol changes to the proper level symbol
	Proper water level (Clean water tank)	Informative symbol
	Full water level (Waste water tank)	Empty the waste water reservoir
	Good water level (Waste water tank)	Informative symbol
	Alert	Press to watch the alert description

Symbol / Message	Symbol / Message Description	Required Action (if applicable)
	The "Successful" message and symbol are displayed when the cycle ends successfully.	—
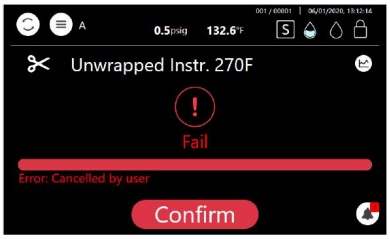	The "Fail" message and symbol are displayed when the cycle failed either due to intended cycle abort action by the user, or due to a run-time error.	Try performing a new cycle in order to sterilize the load.

9.2 Error Messages & Troubleshooting

Message	Description
"Analog Input Error"	This message is displayed when any analog input (such as a Temperature sensor or Pressure sensor) is disconnected or out of range during the cycle. (digital value < MIN DIGITAL READING or digital value > MAX DIGITAL READING). *MIN and MAX DIGITAL READING are preconfigured in the Input-Output file per IO
"Chamber temperature out of range"	This message is displayed if, Chamber Temperature > StandbyChamberTempMaxLimitValue (System Parameter) -OR- Chamber Temperature < StandbyChamberTemp_ MinLimitValue (System Parameter)
"Chamber pressure out of range"	This message is displayed if, Chamber pressure > Ambient pressure + 5% -OR - Chamber pressure < Ambient pressure - 5%
"I/O card is not connected"	This message is displayed if I/O card is disconnected (while

Message	Description
	a cycle is running or not)
"Chamber low temperature error"	This message is displayed if the temperature drops below the sterilization temperature - Chamber Low Temperature Gap parameter during the sterilization cycle (stabilize stage)
"Chamber high temperature error"	This message is displayed if the temperature rises above sterilization temperature + Chamber High Temperature Gap parameter during the sterilization (stabilize stage)
"Chamber Low Pressure"	This message is displayed if Chamber Pressure drops below the sterilization pressure - Chamber Low Pressure Gap during the sterilization (stabilize stage)
"Chamber High Pressure"	This message is displayed if Chamber Pressure raises above Chamber High Pressure Gap + sterilization pressure during the sterilization stage
"Time Error"	This message is displayed if the real-time clock is faulty. Check the HW time and System time during sterilization and raise an error if the difference is above 10 seconds
"Door is open"	This message is displayed when the door is open
"Canceled By User"	This message is displayed after the STOP button is pressed and the cycle aborted
"Air Inlet Error"	This message is displayed on the standby stage if the autoclave does not reach the atmospheric pressure after 5 minutes
"Mineral free water reservoir empty"	This message is displayed if the water level is low in the clean water reservoir and is not sufficient for at least one cycle. The message will appear in the error messages.
"Routine cycle service is recommended Please call your service provider."	This message is displayed if, The number of cycles since the last periodical maintenance, exceeded the "cycle service counter" parameter, -OR- Time elapsed exceeded the "time service counter" parameter

Message	Description
"Power Down"	This message is displayed if power down has occurred during the cycle. The message will appear in the next power up. (this message will be printed after the autoclave is turned on)
"Pressure time error"	This message is displayed if Vacuum pressure fails to reach the required value (parameter Target Pressure) within the required time (parameter Pressure Time Error) in Vacuum pulse stage (Remove Air)
"Water fill Error"	This message is displayed if the water filling valve is On for timer > Parameter Auto Fill Water Valve Time out and Max. the float switch is not On
"Water tank filling, Please wait"	This message is displayed if Water Level is above parameter (Water Detection Value) value and parameter Auto Fill Water Valve Time > 0 (Auto fill)
"Please fill water tank to full for start"	This message is displayed if High consumption water cycle (like Prion) is selected and manual water filling is set (parameter Auto Fill Water Value Time) and the water tank is not full.
"Unrecognized printer" (Optional with Printer)	This message is displayed in the UI, if the printer is not recognized
"Poor water quality"	1. Read the water level from analog sensor. 3. Compare the value system parameter (Water Quality Level). 4. If value is less than parameter
"Set Atmosphere Pressure is Active"	Present when Reset Atmospheric pressure is requested from Technician screen.
"Utility issue #2 – Please switch OFF and ON machine's power switch"	This message is displayed if the main application is not uploaded
"CfrPart11 - None cycle can be started since no user is currently logged on"	This message is displayed if CFR-11 is on and no user is logged in
"Settings don't match current application, Please try to load application first and only afterwards load the settings"	This message is displayed if settings don't match the SW version

Message	Description
"Virus Protect Fail – Press to Confirm"	This message is displayed if Virus Protect program was selected, but failed before Stabilize0 stage completed
"Exhaust Rate Error"	This message is displayed in pulse exhaust if exhaust valve = ON and pressure delta every 60sec > Parameter Exhaust rate (System parameter)
"Jacket heater temperature not in range"	This message is displayed if, JHT > MAX DIGITAL READING (digital value) -OR- JHT< MIN DIGITAL READING (digital value) *MIN and MAX DIGITAL READING are preconfigured in the Input-Output file per IO
"Pipe water heater temperature time error"	This message is displayed if PWH = ON and PWHT < parameter Pipe Water Heater Off Temperature after PWH operation timeout parameter [minutes], disconnect the PWH digital output
"Pipe water heater temperature rate error"	When PWH is on, check every 60sec PWHT delta. If delta is below 2C, the message is displayed
"Jacket heater temperature time error"	This message is displayed if JH = ON and JHT < parameter Jacket Off Temperature after Jacket Operation timeout parameter [minutes]. Applicable for all stages
"Jacket heater temperature rate error"	When JH is on, check every 60sec delta in JHT delta. If delta is below 2C, the message is displayed
"Pipe water heater temperature not in range"	This message is displayed if, PWHT > MAX DIGITAL READING (digital value) -OR- PWHT < MIN DIGITAL READING (digital value). *MIN and MAX DIGITAL READING are preconfigured in the Input-Output file per IO
"Waste reservoir is full please empty the reservoir " (Waste Water Tank is full)	When float digital input of wastewater tank is true, display the message - "Drain waste reservoir" (Waste Water Tank is full)

Message	Description
"Leak"	This message is displayed when performing vacuum test, if after 5 and 10 minutes the pressure is above the Max Pressure Gap parameter
"Start cycle by clock is active"	This message is displayed if the user decides to start cycle by clock. User shall select the time that cycle should be started
"Door opened during the cycle"	This message is displayed if the door is open during the cycle
"High pressure time error"	This message is displayed if the Target Pressure parameter is not reached within Pressure Timeout in steam pulse stage
"Since no user is currently logged on - ' Guest ' user name will appear on result label"	This message is displayed if label printer is configured and no user is logged in
"Internal Error"	This message is displayed if software exception occurred
"Utility Issue #3"	This message is displayed if I/O card was disconnected during upload
"Water Tank State Error"	This message is displayed when the Max Clean Water Float is ON and the Water Level is below the electrodes (< Mineral Free Water Level system parameter)
"System Control Ventilation Alert – please contact service"	This message is displayed when the CPU temp is above the system parameter
Front filter replacement notifications- "It is highly recommended to replace the front filter" "Front filter effectiveness will expire in N days" "Please replace your front filter to preserve sterility in the chamber"	Expiration date is defined by adding System parameter ("Front filter days counter") to last filter replacement date, that can be found in - "Maintenance" > "Reset front filter days counter" **Notification 1:** "Front filter effectiveness will expire in N days" - •Will appear 3 weeks before expiration date (for one day) N = 21 •Will appear 2 weeks before expiration date (for one day) N = 14 •Will appear 1 week before expiration date (for one day) N = 7

Message	Description
	POP UP: "Please replace your front filter to preserve sterility in the chamber" Will appear when date expired and appears every month after the expiration date, until reset is performed **Notification 2:** "It is highly recommended to replace the front filter"- •Will appear when date expired and appears every week until reset is performed. After the user replaces the front filter, he can reset the replacement date in "Maintenance" > "Reset front filter days counter"
"Exhaust error"	This message is displayed on the standby stage if the autoclave does not reach the atmospheric pressure after 5 minutes, and the chamber pressure is more than the atmospheric pressure
"I/O card A2D Error"	There are registers(flags) that indicate issues in A2D conversion on the I/O card. The application should recognize and notify the user about such issues. If flag is true for more than 3 sec (System parameter, default 3 sec, Permission Factory), The error is displayed in the active alarms : IO internal Error (No. “NUMBER OF FLAG IN REGISTER”) Write error to log. Send event to cloud. Stop the cycle as needed.
"Analog input freezed"	Add system parameter “AI monitor time frame” (Default: 10Sec, Permission: Factory). If parameter = 0, feature is disabled If parameter >0, Monitor Temperature AI (digital) is within the time frame of “AI monitor time frame” If AI reading is not changed during the time frame, block all outputs If the issue occurs during standby, prevent the cycle from starting and show the error “Analog Input Freezed - [AI_ NAME]” If the issue occurs during the cycle, stop the cycle and show the error “Analog Input Freezed - [AI_NAME]” Block all heater's outputs.

Message	Description
"Low disk space error"	Disk space utilization should be monitored every 12 hours or on start up (writing logs). If the disk space is used up by more than 75%: Send telemetry Show notification to user in Active alarms
"Door is not open"	This message is displayed when the door is not open when selecting a cycle from the main menu
"Settings will be updated after restart"	This message is displayed when the upgrade setting version is imported from the network.The settings will be upgraded after restarting the device.
"Please connect the device to Wi-Fi"	This message is displayed upon powering up, but only if the Wi-Fi has not been configured and it is not the first time powering up. Pressing "Confirm" will bring up the Wi-Fi connection screen, while pressing "Cancel" will make the message disappear.

10. TSC Printer Installation (optional)

The sections below describe:

- General printer information.
- Safety instructions.
- Setting printer definitions.

10.1 General printer information

The printer(s) are optional and can be purchased/ordered from Tuttnauer by the customer.

The printer can easily be installed and connected to the autoclave following the instructions below.

The options includes:

- One printer connected to the autoclave, loaded either with thermal paper roll, or with label roll. The user can direct the printer to switch between printing on thermal paper roll or label roll.
- Two printers connected to the autoclave - one printer loaded with thermal paper roll, and the second printer loaded with label roll.

10.1.1 Printer Output:

The autoclave is equipped with a character printer, which prints a detailed history of each cycle performed. (This can be used for the record or for subsequent consideration.)

The printing is on thermal paper with a defined set of characters per line and contains important information such as some of the main following details:

- Date:, Time: , Ser. Num:, Model:, Version:,
- Cycle Num:, Cycle Name:, Ster Temp:, Ster Time:, Dry Time:,End Temperature

When the sterilization cycle begins the printer starts printing the above data.

After the preliminary printing, the autoclave starts performing the sequence of operations of the cycle. The measured values of temperature and pressure are printed at time intervals, according to the phase of the process, as shown in the table on the next page.

The data is printed from the bottom up, beginning with the date and ending with "Cycle Ended". For an aborted cycle, "Cycle Failed" and the Error message are printed (refer to "Displayed Error Messages/Symbols").

The printer can also print labels when loaded with label roll and printer1 is selected.

For an example of a typical printout, see below.

Note: The software version number varies according to the released version,

---
Operator: _____

Status: Successful

Time: 15:54

```
  00:24:23 092.7 090.6
  00:24:00 045.8 091.1
  00:23:53 030.9 092.1
D 00:21:53 107.2 123.3
E 00:21:53 107.5 123.3
E 00:21:00 314.5 135.1
E 00:20:59 314.7 135.1
CLK2: 15:51:12
CLK1: 15:51:12
S 00:20:59 314.9 135.1
S 00:20:00 314.1 135.1
S 00:19:00 313.1 134.8
S 00:18:00 315.1 135.0
A 00:09:00 061.7 081.8
A 00:06:00 150.6 103.8
A 00:03:00 045.2 049.8
A 00:00:00 097.4 046.3
  Time     kPa    °C
End Temperature: 120.0°C
Dry Time: 02:00min
Ster. Time: 04:00min
Ster. Temp.: 134.0°C
```

Unwrapped 134

```
Cycle Num: 10
15.0:6015.2211.28.4
SW vers.:
Model: TTA-ECO-10
User: b
Ser. Num: 216103263
Time: 15:30
Date: 11/30/2022
```

10.2 Safety instructions

Warnings!

Hazardous moving parts, keep fingers and body parts away.

For an external printer:

- The print head may be hot and could cause severe burns. Allow the print head to cool.
- Due to the high temperature exuding from the autoclave's upper water tank, please refrain from locating the printer or other equipment on the top cover of the device.

1. Read all the instructions and keep them for future use.
2. Follow all warnings and instructions on the product.
3. Disconnect the power plug from the AC outlet before cleaning or if fault happened. Do not use liquids or aerosol cleaners. Using a damp cloth is suitable for cleaning.
4. The mains socket shall be installed near the equipment and easily accessible.
5. The unit must be protected against moisture.
6. Handle the equipment with care. Ensure the stability when installing the device, tipping or dropping could cause damage.
7. Make sure to follow the correct power rating and power type indicated on the marking label provided by the manufacturer.
8. Please refer to the user manual for maximum operation ambient temperature.

10.3 Setting printer definitions

To enable setting the printer, the user is required to log-in.

1. Press to display the **Quick options** screen.

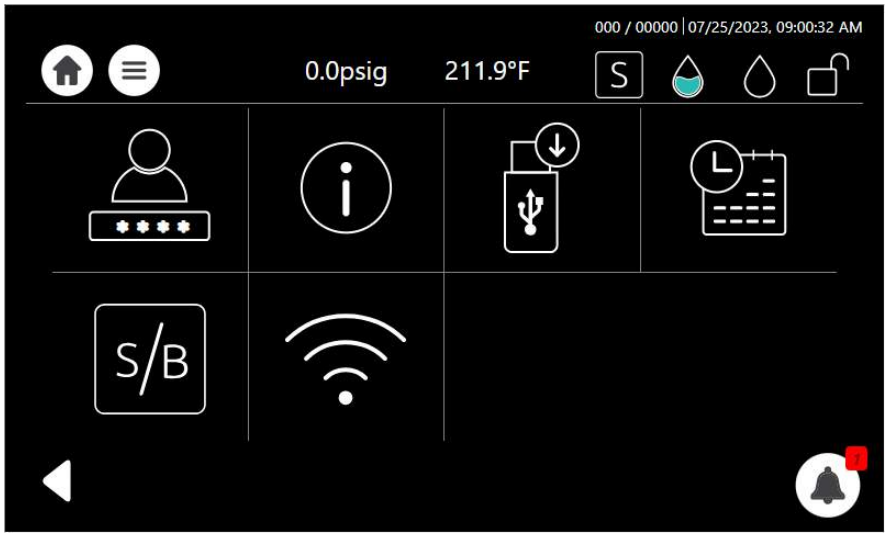

2. Press to display the **Login** screen.

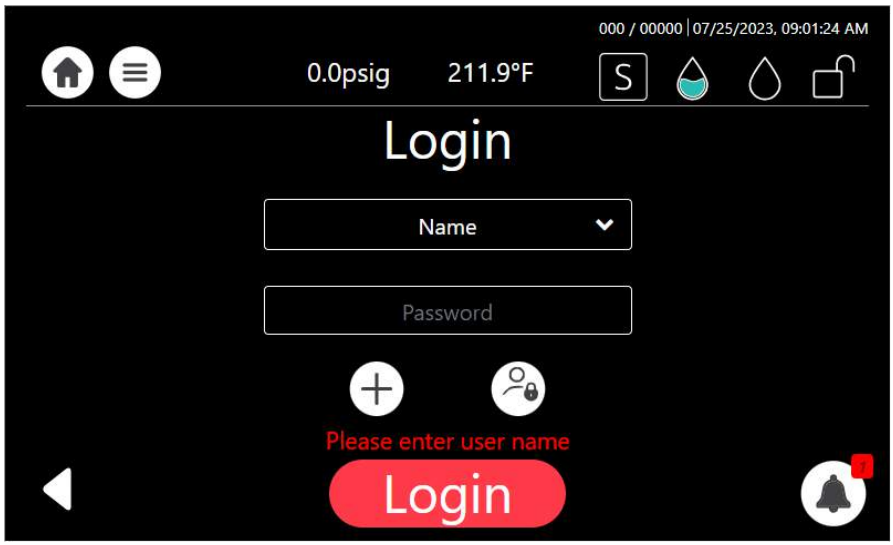

3. Enter the following information:

- **Name** - Admin
- **Password** - 0001
- **FactoryCode** - IUE0ITADS2

4. Press Login .

5. Press to display the **Settings** screen.

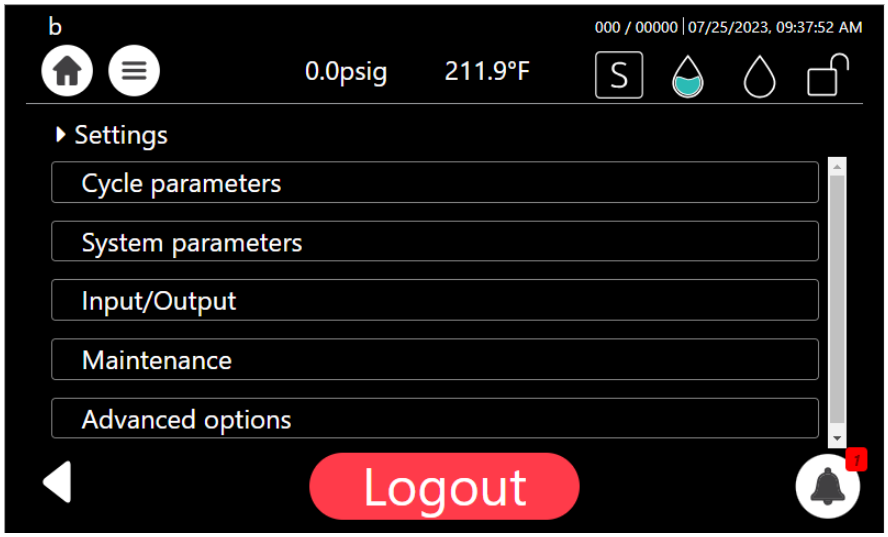

6. Browse to **System parameters**/ **Label printer type** or **Printer Type**.
7. Select for paper roll - Printer Type 6.
8. Select for label roll - Label printer type 1.
9. If only one printer is connected to the autoclave, local = 0 or printer = 1.

The table below, displays the various printer possibilities:

Printer Type	Local
Only paper roll 6	0
Only label roll 1	1
Both paper and label rolls are connected 6	1

11. System Clean Program

11.1 General

The System Clean program is a cleaning and descaling process for Tuttnauer's T-Top Autoclaves.

It uses one tablet from the package - Cat#: CLE096-0075 - T-System Clean Box with 12 tablets.

The T-System Clean tablet is composed from chemicals that are specifically designed for cleansing and removal of water deposit oxides and other sediments that exist in the piping and Chamber of steam sterilizers.

It is recommended to perform the System Clean procedure once every 2 weeks.

Note: If your device is connected to an automatic water fill, close the inlet valve before initiating the cleaning procedure.

11.2 System Clean Cleaning Procedure

The System Clean cleaning program for the family of Tuttnauer's T-Top Autoclaves is described below:

Important :

To avoid burns when removing the trays and holders, the chamber must be cold.

Use gloves to protect your hands from the chemicals.

1. All steps in this procedure must be completed without interruption.
2. Ensure there is water in the clean water reservoir and the screen indicates the proper water level (see sec. 6.3).
3. Lift the water tank cover and place one tablet from the tablet packing in the clean water reservoir.

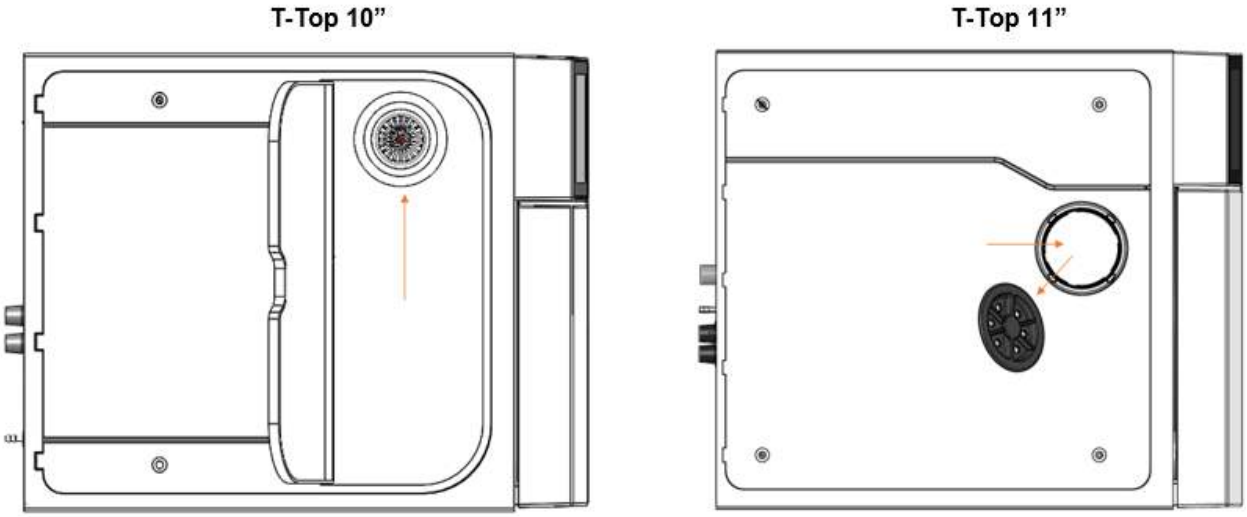

4. Open the autoclave door.
5. Select the relevant program.

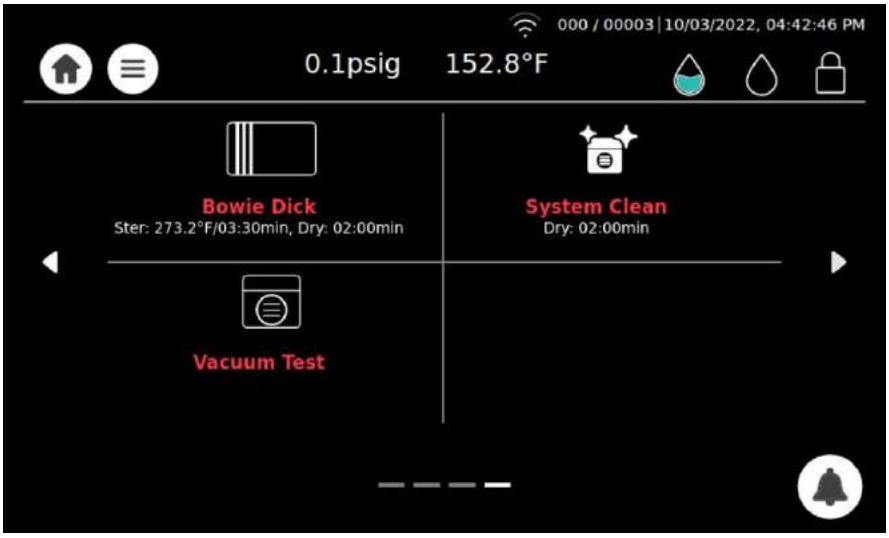

6. Remove all instruments, loads, trays and tray holder from the autoclave chamber.
7. Place the trays and shelf holder in the sink to be cleaned with a stainless steel Safe cleaner.
8. Close the autoclave door.
9. System Clean - Start cycle.

   Press Start .

10. The cycle cleans the piping and the chamber. The System Clean process lasts approx. 25 minutes.

11. After approx. 25 minutes, the System Clean process is complete and the following screen is displayed.

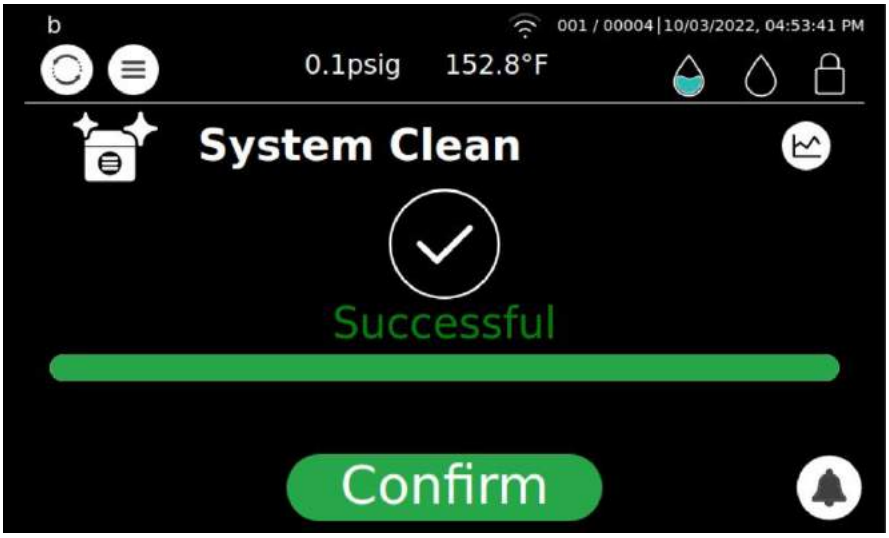

12. Upon cycle completion, follow the instructions below:

- Open the autoclave door to enable the chamber to cool
- Remove the water tank top cover
- Empty both clean water and waste water reservoirs
- Wipe the walls, bottom and the electrode of the clean water reservoir
- Wipe the walls and bottom of the waste water reservoir
- When the chamber cools completely, wipe the walls of the chamber

13. The screen below is displayed.

Note: The electrode in the clean water reservoir detects water; therefore, if the reservoir is not emptied, a notification will reappear on the screen.

14. Press **Confirm**.
15. Return the tray holder and trays to the chamber, being cautious as the inner chamber wall may be hot!
16. Fill the clean water reservoir with distilled water and run an Unwrapped Instrument cycle with the tray holder and trays in the chamber.

Cat. No. MAN205-0502040EN Rev. B
COPYRIGHT ©