KAYSERBURG AUDIO 恺撒堡音响

使用产品前请仔细阅读使用说明书，并请妥善保管

Please read the instruction manual carefully before using the product and keep it properly

广州珠江钢琴集团股份有限公司

Guangzhou Pearl River Piano Group

广州珠江恺撒堡钢琴有限公司

Guangzhou Pearl River Kayserburg Piano Co., Ltd.

地址：广州市增城永宁街香山大道38号

Address: 38, Xiang Shan Avenue, Yong Ning Road, Zengcheng, Guangzhou, China

销售热线：020-81518192

Sales hotline:020-81518192

官网：http://www.pearlriverpiano.com

Website: http://www.pearlriverpiano.com

KAYSERBURG AUDIO 恺撒堡音响

LOVE-520

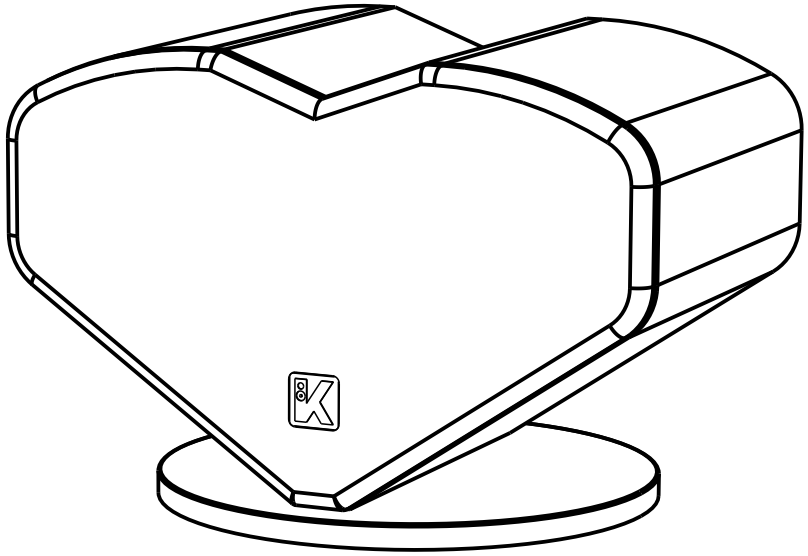

使用说明书

INSTRUCTION MANUAL

内容 Contents

特点 Features 2

注意事项 For your Attention 3

产品概述 Product overview. 4

面板功能 Panel Function 5/6

遥控器功能 Remote Control Functions. 7

技术规格 Specifications 8

TWS两台音箱互连 TWS Pairing of Two Speakers 9

故障排除 Trouble shooting 9

有限保固 Limited Warranty 10

KAYSERBURG AUDIO 恺撒堡音响

特点 Features

谢谢您购买我们的产品。在进行连接和操作本产品之前，请仔细阅读本手册。请保留本手册，以备将来参考。

Thanks for your purchase of our product. Please read through this manual before making connections and operating this product. Retain this manual for future reference

- 蓝牙播放 • Bluetooth playback
- AUX 输入 • AUX Input
- ARC 输入 • ARC Input
- 光纤输入 • ODIO
- U盘播放器 • USB Player
- 卡拉OK • WIRELESS MICS

包装物件 Package

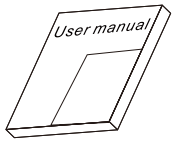

用户手册
User Manual

遥控器
Remote Control

电源适配器
AC power cord

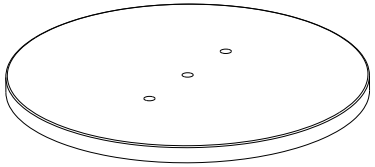

底座
Pedestal

螺丝
screw

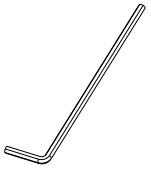

扳手
spanner

注意事项 For your Attention

- 请在使用本产品之前先阅读本手册。保留本手册备查。
- 不要拆解音箱。如需维修，请在专业人员的指导下进行维修。
- 不使用时，请关闭音箱开关，并断开适配器交流电源。
- 仅使用制造商指定的附件、配件。

放置事项

- 不要将音箱置于热源或阳光直射的地方。
- 不要将设备安装在潮湿或下雨的地方。
- 不要将装有液体的饮料，水杯，花瓶置于音箱之上。
- 将音箱放在平坦、稳固的台面上，请勿堵塞音箱的出风口，以免造成音箱故障。

搬运及移动事项

- 本产品为精密电子设备，内部含有易损元件（如扬声器单元、功放单元）。
- 搬运时请务必轻拿轻放，避免摔落、碰撞或剧烈震动。
- 搬运时，请用双手稳固托住音箱箱体的底部和侧面。切勿仅提拉网罩、接线柱或倒相孔，以免造成损坏或变形。
- 在搬运和放置过程中，请注意保护音箱表面（如网罩、漆面），避免与尖锐或粗糙物体刮蹭。

运输保护装置的拆除

- 音箱在出厂时为保护运输安全，安装了特定的保护装置。在使用音箱前，必须完全拆除所有运输保护部件！
- 拆除的保护装置（珍珠棉）建议暂时保留，以备日后需要再次运输音箱时使用。

- Please read through this manual before making connections and operating this product. Retain the manual for future reference.
- Don't open the cabinet of this unit. No user-serviceable parts inside. Refer servicing to qualified personnel only.
- Switch off the unit and disconnect it from the AC power supply when not in use.
- Only use attachments/accessories specified by the manufacturer.

Installation

- Don't install the unit in a place exposed to heating sources or direct sunshine.
- Don't install the unit in a place exposed to moisture or rain.
- The apparatus shall not be exposed to dripping or splashing and no objects filled with liquids, such as vases or glasses, shall be placed on the unit.
- Install the unit on a horizontal, flat and firm surface with good ventilation. Never block the vents, which may cause malfunction resulting from overheating.

Handling and Moving

- This product is a precision electronic device containing fragile components (e.g., speaker units, amplifier modules).
- Always handle with care during transportation. Avoid dropping, impacting, or subjecting it to severe vibration.
- When moving the unit, use both hands to firmly support the bottom and sides of the cabinet. Never lift the unit solely by the grille, terminals, or bass reflex port, as this may cause damageor deformation.
- During handling and placement, please protect the surface of the unit (e.g., grille, finish) from contact with sharp or abrasive objects.

Removal of Transit Protection

- Specific protective devices are installed on the unit at the factory to ensure transport safety. Before using the unit, all transit protection components must be completely removed!
- It is recommended to temporarily keep the removed protective devices (protective foam inserts) for future use if the unit needs to be transported again.

产品概述 Product overview

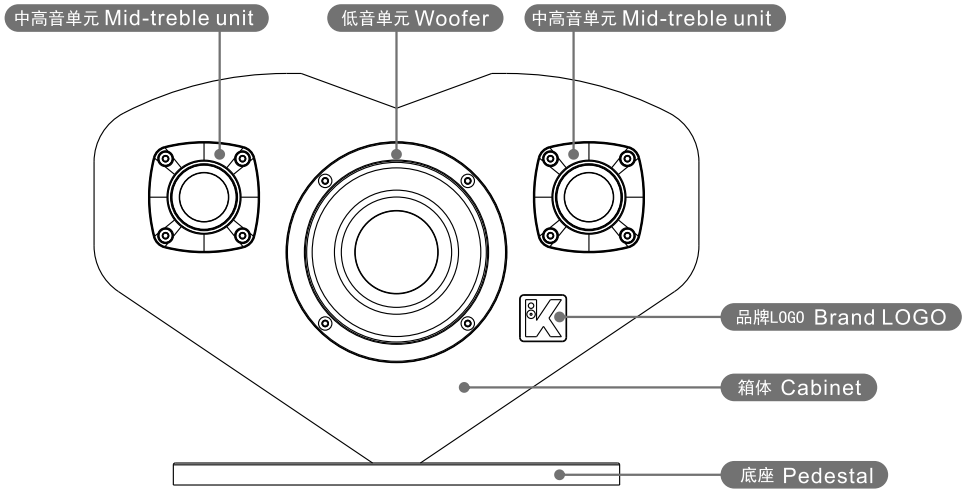

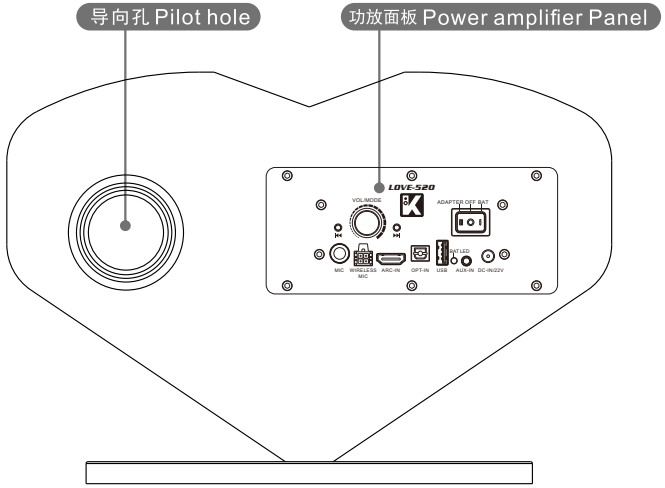

面板功能

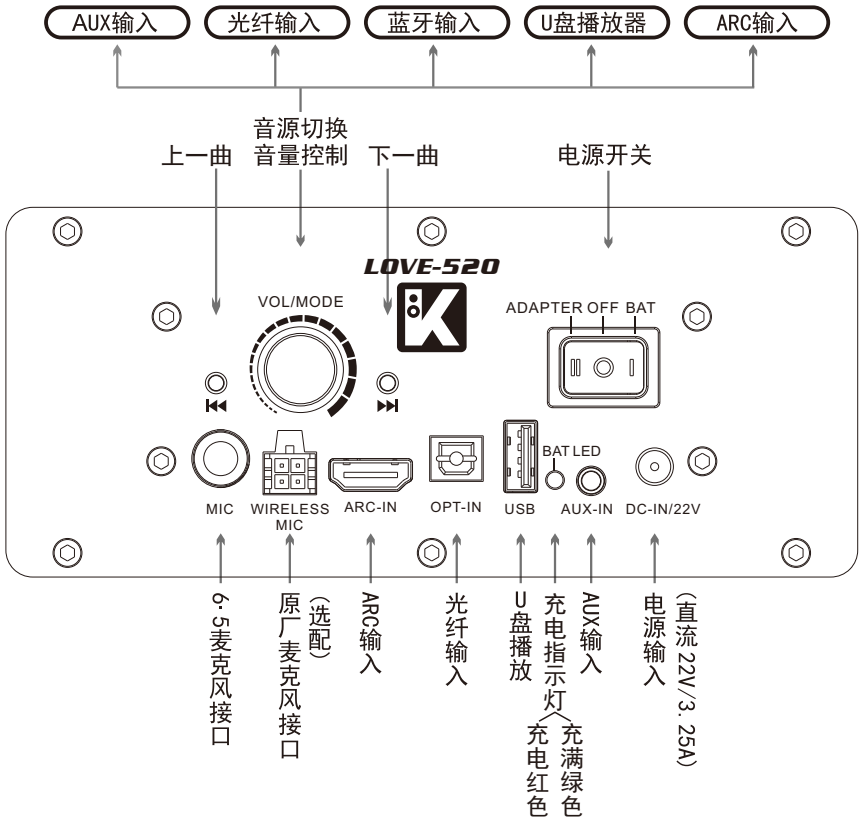

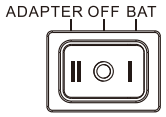

适配器输入DC 22V:
开关打在“ADAPTER”适配器DC 22V直接给功放供电，
同时给电池充电；
开关打在“OFF”关机，同时给电池充电
开关打在“BAT”适配器给电池充电，电池给功放供电

不插适配器DC 22V，电池有足够电量时
开关打在“BAT”电池给功放供电，
开关打在“OFF”或“ADAPTER”时处于关机状态

KAYSERBURG AUDIO 恺撒堡音响

Panel Function

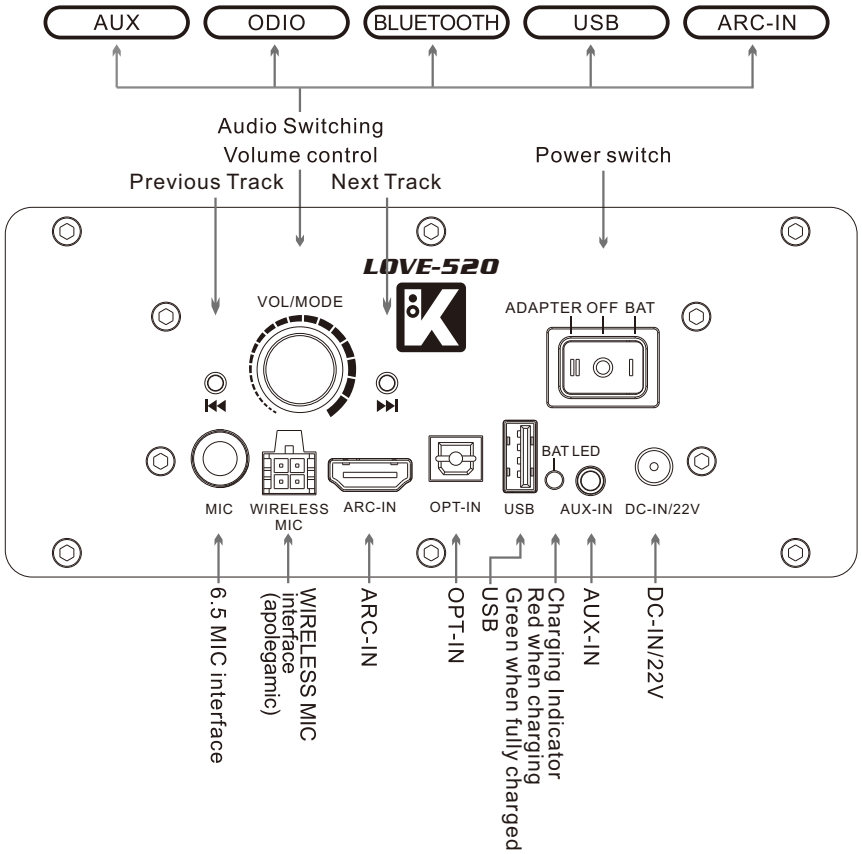

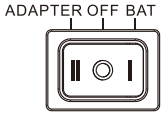

DC22V（Adapter input DC22V）:
The switch on “Adapter”DC22V directly supplies power to the amplifier ,while simultaneously charging the battery.
The switch on “OFF” to power off ,while simultaneously charging the battery.
The switch on “BAT” adapter to charge the battery, and the battery supplies power to the amplifier.

Without adapter DC22V, when the battery has enough power
The switch is on "BAT" and the battery supplies power to the amplifier,
The switch is powered off when “OFF” or “ADAPTER”is switched on

控制器功能 Remote Control Functions

技术规格 Specifications

声音规格：采用主动分频立体声音箱D类功放
中高音单元：2寸 4Ω 25Wx2
低音单元：4寸 4Ω 45W
低音频响范围：30Hz - 3KHz (-3dB)
中高音频响范围：350Hz - 22KHz (-3dB)
功放最大功率：55W+25Wx2
蓝牙连接方式：蓝牙5.0
电源适配器输入：AC100-240V 50-60Hz
电源适配器输出：23V/3A
工作电压范围：20V~24V
内置电池：2000mAh
音源输入：AUX,光纤，U盘，蓝牙，ARC输入
尺寸：330x202x225mm

Sound specification: Adopt active frequency division stereo speaker
D class power amplifier
Mid-treble unit: 2 inches 4Ω 25Wx2
Woofer: 4 inches 4Ω 45W
Woofer Frequency Response: 30Hz-3KHz(-3dB)
Mid-treble Frequency Response: 350Hz-22KHz(-3dB)
Power amplifier power: 55W+25Wx2
Bluetooth : Bluetooth 5.0
Power adapter input: AC100-240V 50-60Hz
Power adapter output: 23V/3A
Operating Voltage Range: 20V~24V
Internal battery: 2000mAh
Audio Inputs: AUX,ODIO,USB,BLUETOOTH,ARC-IN
Size: 330x202x225mm

TWS两台音箱互连 TWS Pairing of Two Speakers

左声道
Left Channel

右声道
Right Channel

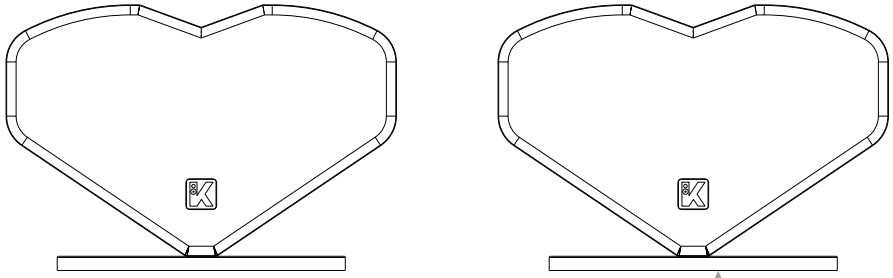

两个音箱的电源同时打开，快速双击右边音箱面板的VOL/MODE旋钮，语音播报TWS，TWS模式设置成功，双击设置音箱为右声道，在TWS模式两个音箱只有一个蓝牙名称LOVE-520

Power on both speakers. Quickly doublepress the VOL/MODE knob on the right speaker. A voice prompt “TWS” will confirm that TWS mode is enabled. To set this speaker as the right channel, doublepress the knob again. In TWS mode, the system uses one Bluetooth name: LOVE-520

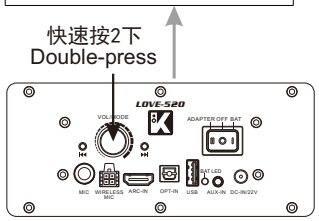

故障排除 Troubleshooting

在使用维护服务之前，请自己查看下面的图表。

症状	起因	处理方法
无电源	●AC电源线未连接到电源或未安全连接到电源	●正确将电源线连接到电源插座上
声音没有声音	●音量调节处于最小挡位	●打开音量
面板上的按钮失灵	●音箱受到静电等干扰	●开关关闭并拔下单元。然后将插头连接到电源上，并再次接通电源

Before resorting to maintenance service,please kindly check by yourself with the following chart.

Symptom	Cause(s)	Remedy
No Power	●The AC power cord is not connected to the poweisupply oris not connected to a power supplysecurely.	●Please check that the AC power cordis connected securely.
Sound There is no sound orthe sound is distorted.	●The volume is set to the minimum level.	●Turn up the volume.
The buttons on theunit doesn't work.	●The unit is being interfered with static electricity etc.	●Switch off and unplug the unit. Then connect the plug to the power supply and switch it on again.

有限保固 Limited Warranty

自收到原始收据与购买凭证(只适用于中国)之日起，所购买恺撒堡产品的质保期为12个月。原始收据与包装应该保留12个月，如果产品在质保期任何阶段出现问题，使用完整的原始包装将产品返回购买地点，不得丢失任何项目。

质保不包括以下方面:

- 不正确的安装对产品造成的损坏;
- 对其它部件造成的后续损坏;
- 将产品置于潮湿、过热、化学清洗剂或UV辐射中造成的损坏;
- 由于疏忽、误用、事故或滥用造成的损坏，同一故障反复维修属于误用本产品;
- 放大器或变形造成的损坏;
- 任何非授权机构对产品部分进行修理或更改;
- 非缺陷件的返回运输;
- 由于使用密封剂对产品造成损坏。

The warranty period for the purchased KAYSERBURG product is 12 months, commencing from the date of the original receipt and proof of purchase (Applicable in China only). The original receipt and packaging should be retained for 12 months. If a problem occurs at any stage during the warranty period, return the product to the place of purchase in its complete original packaging, ensuring no items are missing.

This warranty does not cover the following:

- Damage to the product resulting from incorrect installation.
- Consequential damage to other components.
- Damage caused by placing the product in humid, overheated environments, or exposure to chemical cleaners or UV radiation.
- Damage due to negligence, misuse, accident, or abuse. Repeated repairs for the same fault constitute misuse of the product.
- Damage to amplifiers or deformation.
- Any repairs or alterations made to the product by any organization not authorized by the manufacturer.
- Return transportation costs for non-defective parts.
- Damage to the product resulting from the use of sealants.

FCC Statement

This device complies with part 15 of the FCC Rules. Operation is subject to the following two conditions: (1) This device may not cause harmful interference, and (2) this device must accept any interference received, including interference that may cause undesired operation.

This equipment has been tested and found to comply with the limits for a Class B digital device, pursuant to Part 15 of the FCC Rules. These limits are designed to provide reasonable protection against harmful interference in a residential installation. This equipment generates uses and can radiate radio frequency energy and, if not installed and used in accordance with the instructions, may cause harmful interference to radio communications. However, there is no guarantee that interference will not occur in a particular installation. If this equipment does cause harmful interference to radio or television reception, which can be determined by turning the equipment off and on, the user is encouraged to try to correct the interference by one or more of the following measures:
-- Reorient or relocate the receiving antenna.
-- Increase the separation between the equipment and receiver.
-- Connect the equipment into an outlet on a circuit different from that to which the receiver is connected.
-- Consult the dealer or an experienced radio/TV technician for help.

Any Changes or modifications not expressly approved by the party responsible for compliance could void the user's authority to operate the equipment.

This equipment should be installed and operated with a minimum distance of 20cm between the radiator and your body.

This equipment complies with the FCC radiation exposure limits set forth for an uncontrolled environment, This transmitter must not be co-located or operating in conjunction with any other antenna or transmitter.