Electric Lift Anti-Light Screen

NEOTUNT

CATALOGS

1.Products . . . 2
Appearance . . . 2
Accessory List . . . 3
2.Precautions for use . . . 4
Important Tips . . . 4
Precautions for use . . . 5
3.Installation . . . 6
Product wiring diagram . . . 7
Product Fixing Diagram . . . 8
4.Screen operation . . . 9
Manual switch . . . 9
WeChat small program switch . . . 10
Linkage control . . . 11
5.After-sales service . . . 12
6.Warranty Policy . . . 12
7.Warranty Card . . . 13

Products

Appearance

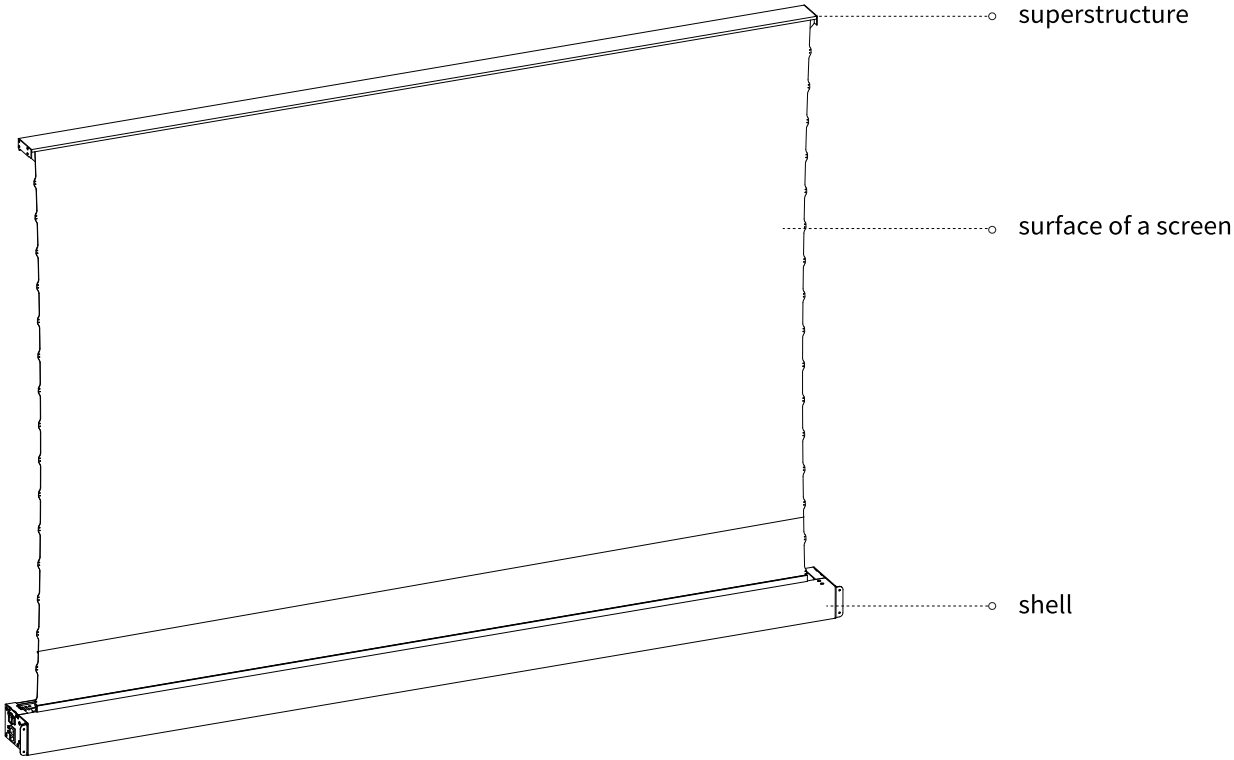

Accessory List

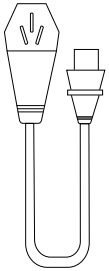

power line

Debugging Stick

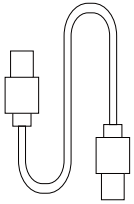

USB Transmis-
sion Cable

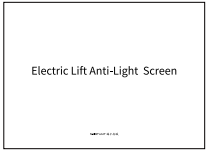

Instruction manual

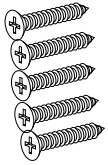

Cross counter-
sunk head
tapping screws
M4*16 (5 pcs)

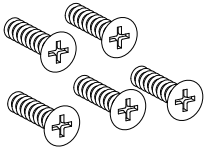

Phillips counter-
sunk head screws
M4*10(5pcs)

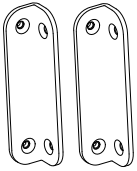

Fixed tripod*2

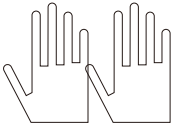

Installation
Cleaning Gloves

Precautions for use

Important Tips

1.The product is equipped with a strong tension V-spring holder system. Please do not disassemble it by yourself, disassembling the screen privately will bring certain risks, if the machine malfunctions due to improper operation, the The seller and the manufacturer have the right not to be responsible for the replacement of the product. The seller and the manufacturer have the right not to be responsible for the replacement of the product if it causes personal injury.

2. Except for authorized technicians, no one can open the inside of the device and repair it.

3. Do not place any debris inside the housing to avoid damage to the equipment. The seller and the manufacturer are not responsible for any damage to the equipment caused by this. Before the screen is turned off, please make sure that there is no debris inside the housing.

Do not touch the screen directly

Do not place any debris inside the housing

Precautions for use

1. To ensure personal safety and reliable operation of the equipment, please use the power cord that comes with the equipment to connect the power supply.

2. Make sure that the power supply connected to the device has a stable current.

3. Do not operate the power plug when hands and feet are in contact with water.

4. Do not place heavy objects on the power cord and screen, which need to be properly placed to avoid danger and obstacles to operation.

5. The screen should be protected from direct sunlight, rain and moisture.

6. Please use the power cord correctly to avoid loose plugs which may cause electric shock, short circuit or fire.

7. When the equipment is not in use for a long time, like any other household appliances, please completely disconnect the power supply to ensure safety.

8. The equipment should be kept away from sources of ignition and high temperature items to prevent it from overheating. The equipment should be disconnected from the power supply before transportation or maintenance.

9. The motorized screen is equipped with a tubular motor that has a temperature control sensor with an overheating protection mechanism. If the screen runs up and down continuously for 1 minute and a half, the motor needs to be rested for 30min,This prevents the motor from being damaged due to overheating. If the motor thermal protection mechanism stops working, turn off the power and wait for the motor to cool down for 1 hour before continuing operation.

Installation

Note: The product needs to be used with the cabinet, the cabinet needs to be reserved for the appropriate movement space according to the top cover size, and the recommended gap is reserved greater than or equal to 2mm.

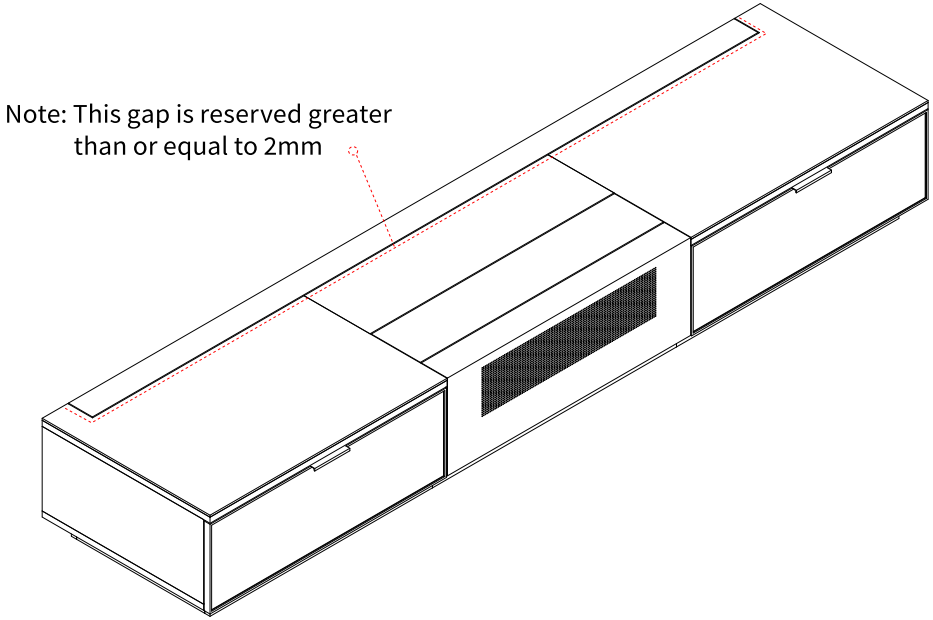

Product wiring diagram

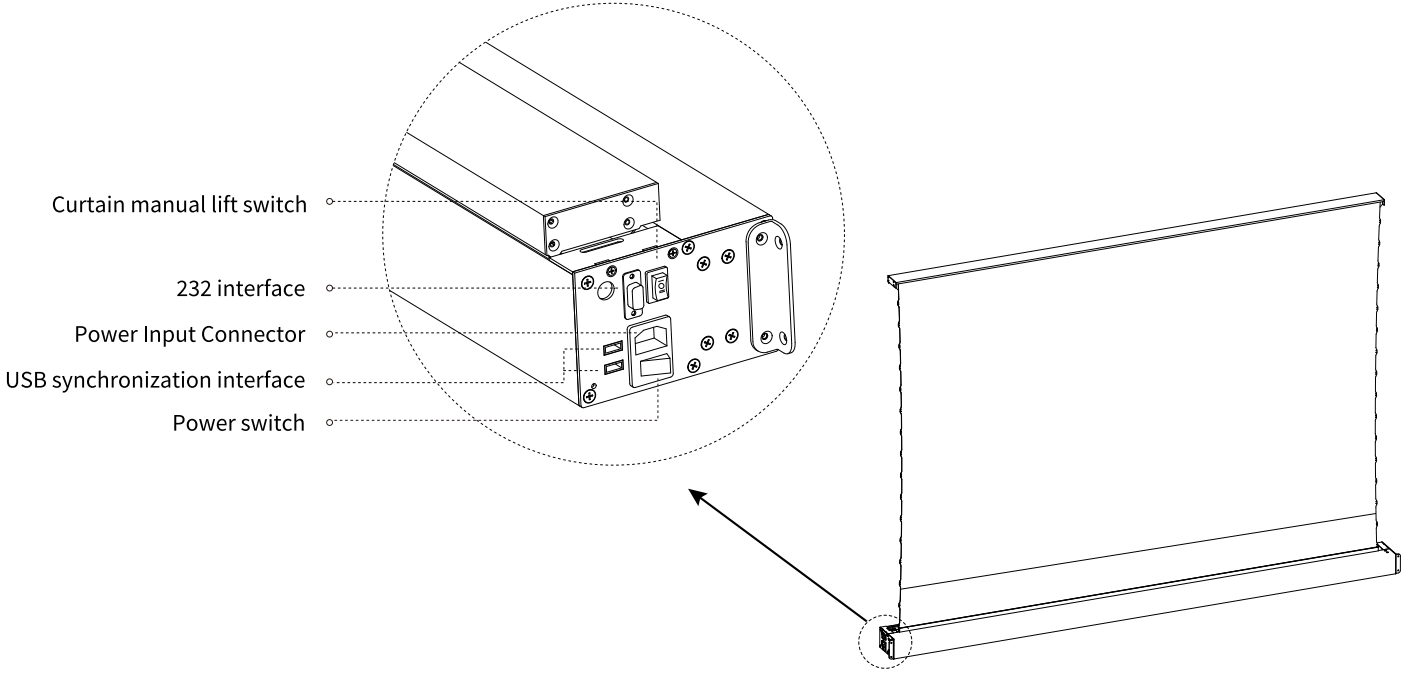

Product Fixing Diagram

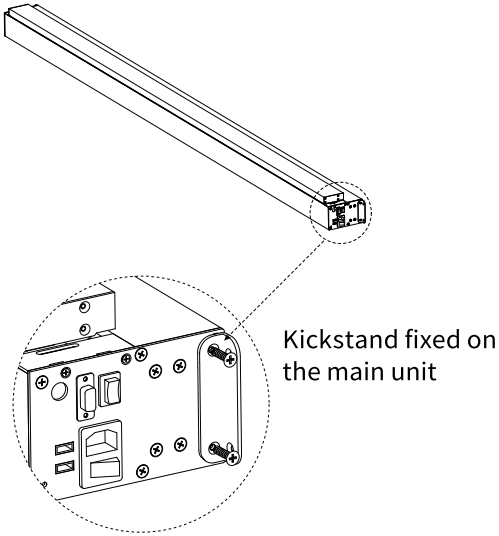

Phillips countersunk
head screws
M4*10

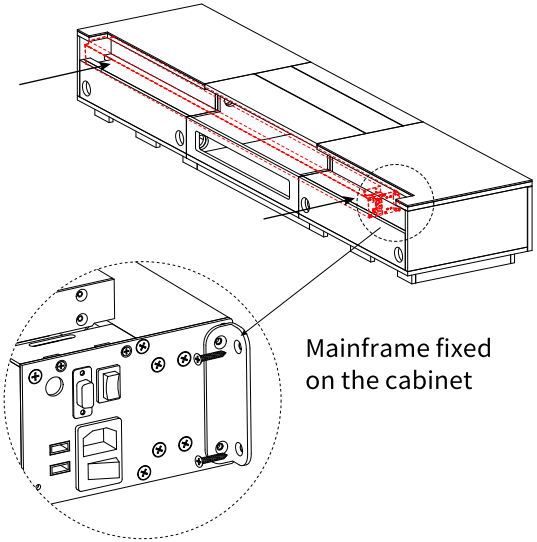

Cross countersunk
head tapping screw
M4*16

Screen operation

Manual switch

The left side of the screen housing is equipped with a manual switch that controls the screen "up/stop/down".

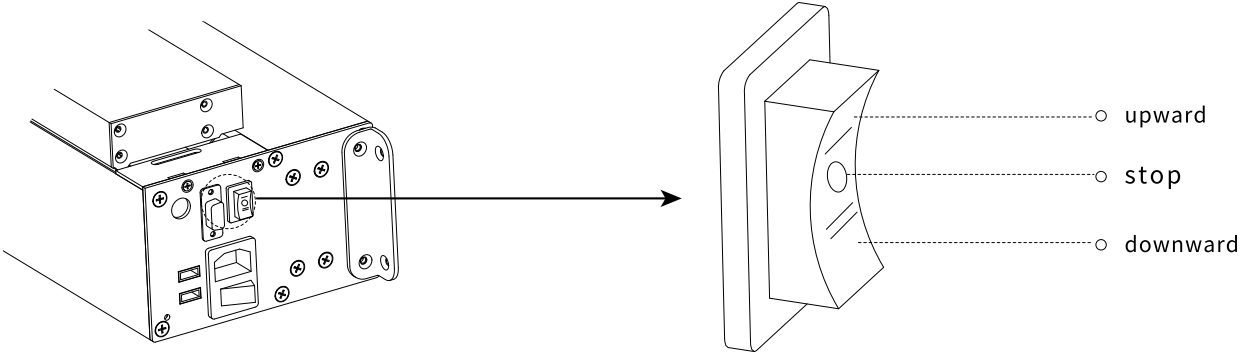

Note: Long press the "up" button, the curtain rises, long press the "down" button, the curtain falls, let go that stops, the button does not have the position memory function.

small program switch

1. Scan the code on WeChat to open the "Xiao Shun Quick Adjustment" app.

2.Open the cell phone positioning and Bluetooth, select the NECTUNT device, click to connect and enter the main page.

3.Click open and the curtain opens, click close and the curtain closes.

4. If you need to adjust the height of the curtain, click the debug button, adjust the curtain upward, click forward, adjust the curtain downward, click backward, click save after adjustment.

Xiao shun
kuai tiao

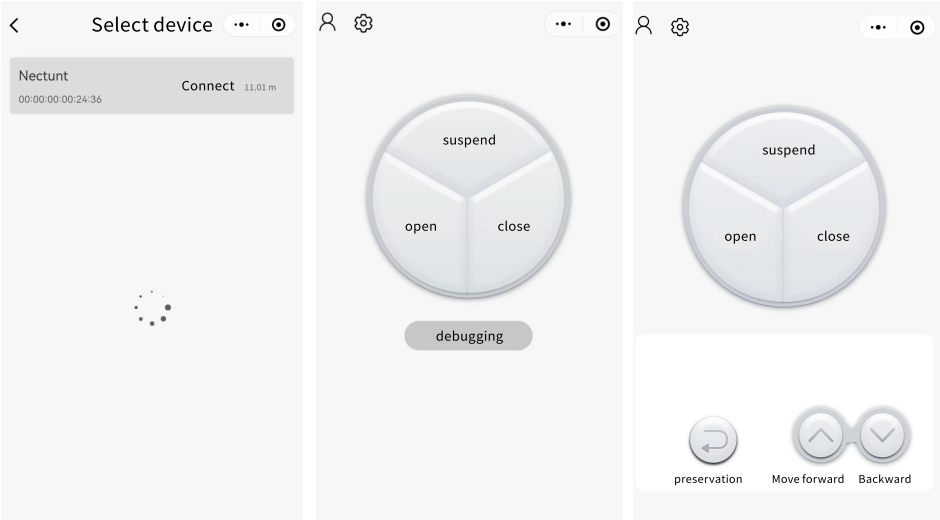

Linkage control

1. Simply plug the USB end of the sync cable into any USB port of the curtain, and connect the other end to the USB port of the laser TV.

2. Use the laser TV remote control to turn on the laser TV, the curtain will be synchronized to open. Laser TV off, curtain synchronization off.

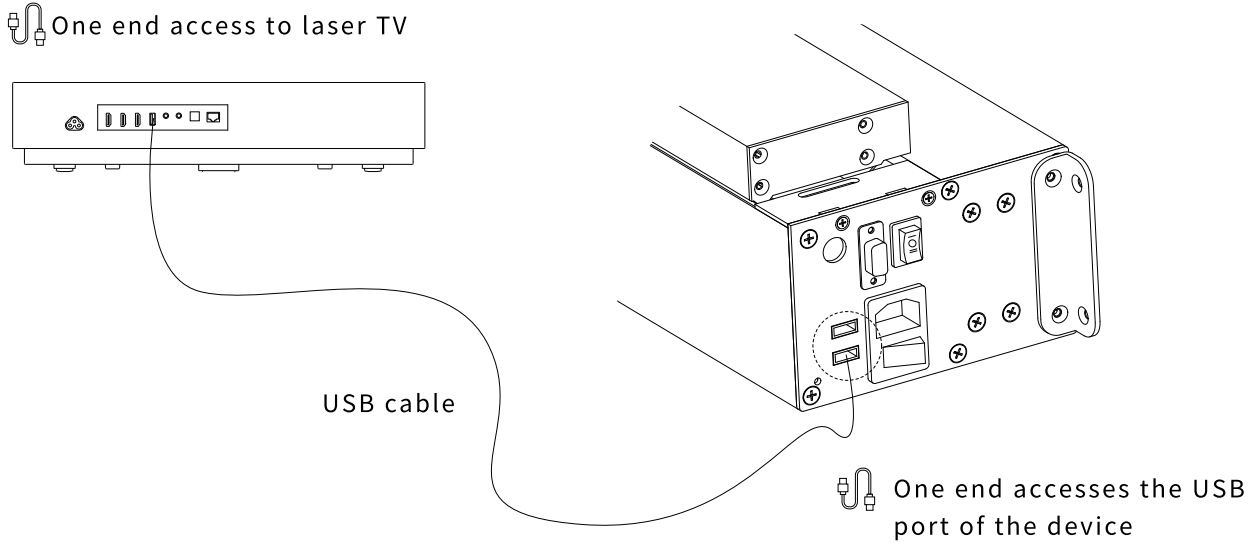

After-sales service

Sunhe after-sales service in accordance with the "Law of the People's Republic of China on Protection of Consumers' Rights and Interests" and "Law of the People's Republic of China on Product Quality" to implement the after-sales three packages, the service content is as follows:

1. within the validity period of the three packages, you can enjoy free replacement, maintenance services in accordance with the provisions of this regulation, maintenance, replacement should be handled with the invoice.
2. 7 days no reason to return (e-commerce purchase channel), the user to bear the logistics costs. 3.
3. This product has a quality problem arising from performance failures, after testing to determine the following services.

Warranty Policy

Type of service	service policy
Returns	Returns for product quality problems within 7 days from the day after signing for the goods
Exchange	Exchange within 15 days from the next day after signing for the product quality problem.
Repair	Repair within 1 year from the day after signing for the product quality problems

The following damages to the product that are not caused by our products, or other man-made causes, natural disasters, etc. are not covered by our warranty:

①Installation is not correct, resulting in damage to the product.

② has exceeded the validity period of the three packages.

③ The installation, maintenance, alteration, disassembly without the authorization of the Company, as well as the user's own misuse, collision, scratches into the liquid and other operations, resulting in product quality problems.

④ Damage caused by force majeure.

⑤ Torn or altered labels, machine serial number, anti-counterfeiting mark, three packages of vouchers of the model and serial number does not match the product or altered product changes.

⑥Damage caused by the use of the environment and the way does not comply with the expression of the product manual.

⑦ Product damage caused by the user's secondary transportation.

Warranty Card

user information

Customer name: _____

Customer Phone: _____

Zip Code: _____

Full address: _____

Product Information

Product Name: _____

Product Model: _____

Date of purchase: _____

Invoice Number: _____

Purchase Channel: _____

Company official website:http://www.isunhe.com

National unified service telephone: 400-1366-780

Production Address: No.20, Zhenze Road, Xinzhuang Street, Yixing City, Wuxi City, Jiangsu Province, China

FCC Statement

This equipment has been tested and found to comply with the limits for a Class B digital device, pursuant to Part 15 of the FCC Rules. These limits are designed to provide reasonable protection against harmful interference in a residential installation. This equipment generates uses and can radiate radio frequency energy and, if not installed and used in accordance with the instructions, may cause harmful interference to radio communications. However, there is no guarantee that interference will not occur in a particular installation. If this equipment does cause harmful interference to radio or television reception, which can be determined by turning the equipment off and on, the user is encouraged to try to correct the interference by one or more of the following measures:

-- Reorient or relocate the receiving antenna.

-- Increase the separation between the equipment and receiver.

-- Connect the equipment into an outlet on a circuit different from that to which the receiver is connected.

-- Consult the dealer or an experienced radio/TV technician for help.

This device complies with part 15 of the FCC Rules. Operation is subject to the following two conditions: (1) This device may not cause harmful interference, and (2) this device must accept any interference received, including interference that may cause undesired operation.

Changes or modifications not expressly approved by the party responsible for compliance could void the user's authority to operate the equipment.

This equipment complies with FCC radiation exposure limits set forth for an uncontrolled environment.

This equipment should be installed and operated with minimum distance 20cm between the radiator & your body.