Manual

CONTENTS

GENERAL SAFETY	4
GENERAL WARNINGS	5
IMPORTANT NOTES	6
PACKAGE CONTENTS	8
PRODUCT OVERVIEW	9
BATTERY CHARGE	11
OPERATING INSTRUCTIONS	12
TROUBLESHOOTING	14
CARE AND MAINTENANCE	15
TECHNICAL SPECIFICATIONS	16

GENERAL SAFETY

IMPORTANT INFORMATION

Read this manual thoroughly before you start using the product.
The safety precautions instructions reduces the risk of fire,and injury when correctly complied to.

Please follow all instructions and take notice of all warnings.

This appliance is not intended for use by persons (including children) with reduced physical, sensory or mental capabilities, or lack of experience and knowledge, unless they have been given supervision or instruction concerning use of the appliance by a person responsible for their safety. Children should be supervised to ensure that they do not play with the appliance.

GENERAL WARNINGS

For safe use and maximum performance please read this manual carefully before use.

CAUTION: TO REDUCE THE RISK OF ELECTRIC SHOCK, DO NOT DISASSEMBLE THE APPLIANCE. THERE ARE NO USER SERVICEABLE PARTS. FOR REPAIRS CONTACT QUALIFIED TECHNICAL STAFF.

To avoid the danger of electric shock or fire, do not expose to rain or moisture.

IMPORTANT NOTES

- The use must be allowed only to adults and responsible persons, adequately educated on the damages deriving from incorrect use.

- Do not use the appliance outdoors, as rain could create short circuits. Do not touch the appliance with wet hands.

- The max. operation temperature is 45°C.

- **Avoid installing the unit in the locations listed below:**
  - Places exposed to direct sunlight or close to equipment that generate heat, such as radiators;
  - Above other appliances that can radiate excessive heat;
  - Places that block ventilation or are humid or dusty;
  - Environments subject to constant vibration.

IMPORTANT NOTES

- Do not place accessories with naked fames, such as light ed candles, on the appliance.

- Do not try to repair or intervene on the appliance yourself. Incorrect interventions or tampering can void the guarantee. In the event of any damaged parts or suspected malfunction, discontinue use immediately and consult qualifed personnel. Never dip the appliance in wat er or other liquids. Do not place bowls containing liquids (such as vases) on top of the appliance.

- Do not touch the appliance with wet hands and do not place it near sinks, tubs or bowls of liquids. Use the product only if in perfect condition. If the appliance has been lipped in water or is damaged, contact qualifed personnel.

- The product should not be used if it has been dropped or if there are any visible signs of damage.

- Exposure to high volume levels can cause hearing problems, including permanent damage. The tendency to hearing loss varies from person to person, however constant exposure to high volume levels is harmful to anyone. Moderate the volume level.

- Do not turn on or use the device while charging.

PACKAGE CONTENTS

1	Bluetooth Karaoke Machine	1 piece
2	Microphone	2 pieces
3	USB-C charging cable	1 piece
4	3.5mm AUX cable	1 piece
5	Instruction manual	1 piece
6	Warranty Card	1 piece

PRODUCT OVERVIEW

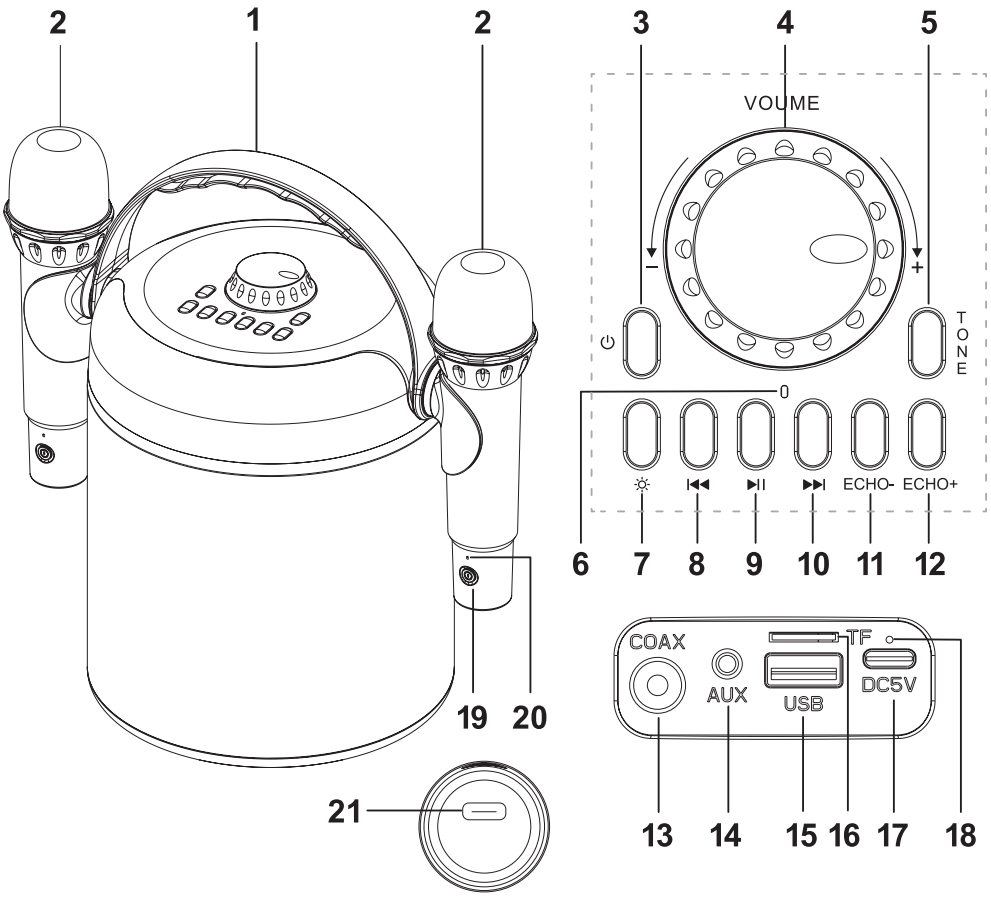

1.	Handle	11.	ECHO- a.Short press:microphone volume down b.Long press :Echo volume down
2.	Wireless Microphone		
3.	Power button a.Long press:turn on/off the speaker b.Short press:change input mode (BT/TF/USB/Aux in)	12.	ECHO+ a.Short press:microphone volume up b.Long press :Echo volume up
4.	Volume knob	13.	Coaxial input
5.	Magic voice(4 diferent efects) a.Double press: enter/exit the magic tone b:Short press: change the tone	14.	AUX input
		15.	USB connection
6.	Pairing LED indicator	16.	Micro SD input
7.	RGB LED Lights control button a.Long press: turn on/of LED lights b.Short press : change LED lights efect	17.	USB-C input for charging
		18.	Charging indicator
8.	Previous track	19.	Power button of microphone a.Long press:turn on/off microphon b.Short press : mute microphone
9.	Play/Pause a.Short press :play pause b.Long press :disconnect Bluetooth	20.	Indicator
10.	Next track		

BATTERY CHARGE

BRK15B has a built-in rechargeable battery which can be recharged using the supplied cable and a DC 5V 1A power adapter (not supplied). Before use, it is recommended to fully charge the battery.
During the charging phase, the red LED will be on (the speaker will be fully charged in about 4.5 hours).
The indicator will turn off when the appliance is fully charged.

Note:

- Low battery warning: when the speaker is low it will periodically start emitting a warning sound, recharge the unit to resume playback.

- The battery life (it lasts about 3 hours with listening at 70% volume) may vary depending on the listening volume, the type of song being played, the paired external device and whether or not the LED lights ON.

- Charging times may vary depending on the charge status of the unit and on features of the used power charger.

OPERATING INSTRUCTIONS

POWER ON/OFF/CHANGING SOURCE

- Press and hold the Power key to turn on the unit, then you can hear the short prompt voice and pairing LED is blinking in blue color.
- Press and hold the Power key of the microphones to turn on microphone.
- The wireless microphones will connect with speaker automatically.
- When you press and hold the Power key again,the unit will be power off.
- Short press the powerkey on the speaker to change Bluetooth/USB microSD/Aux/Coaxial mode.

CHOICE OF LED LIGHTS EFFECT

After turning on the unit press and hold the LED Lights key to turn on/off the LED lights.By briefy pressing the LED light key,you can change the light effect.

PLAY/PAUSE

During music playback, press button ►II to pause the playback. To resume playback, press the button ►II again.

BLUETOOTH FUNCTION

The device supports music playback via Bluetooth connection to a smartphone or other compatible Bluetooth device.

NOTE : : It can not be guaranteed the compatibility with all Bluetooth devices on the market.

BLUETOOTH CONNECTION:

- Turn on the speaker and activate the Bluetooth function on the external device.

- Search for the name " BRK15B " from your external device and select it to pair with Bluetooth (enter "0000" if required).

- An audio signal will confirm the pairing.

- Note: Once the devices have been successfully paired, the Bluetooth pairing will no longer be required and the devices will connect automatically.

MICRO SD FUNCTION

- Insert a micro SD card (containing tracks in MP3 format) into the appropriate input after turning on the speaker. Playback will start automatically.

- Short press the " ▶▶| " or " |◀◀ " button to go to the next / previous track.

USB INPUT FUNCTION

- Insert a USB stick (containing tracks in MP3 format) into the appropriate input after turning on the speaker. Playback will start automatically.

- Short press the " ▶▶| " or " |◀◀ " button to go to the next / previous track.

AUX FUNCTION

To play audio via AUX input, connect one end of the 3.5mm AUX cable to the AUX input on the speaker and the other to the external device. Select the right source by short pressing the Power key then start playback directly from the external device.

NOTE: In AUX mode,it is not possible to go to the previous / next track with the " ▶▶| " and " |◀◀ " keys, but it is necessary to carry out the operation directly from the connected external device.

COAXIAL AUDIO INPUT FUNCTION

To play audio via coaxial input, connect one end of RCA cable(not included) to the coaxial audio input on the speaker and the other to the external device. Select the right source by short pressing the Power key then start playback directly from the external device.

TROUBLESHOOTING

PROBLEM	REMEDY
Power light is not ON	Long press the Power key to turn on the appliance.
	The battery is low, leave the device to charge for a few hours.
Cannot pair	Check that the speaker is turned on and is not already paired with another device.
	If there are too many Bluetooth devices turned on nearby, turn them off to avoid any interference and try to perform Bluetooth pairing again.
Sound is weak or distorted	Check the volume of the speaker and that of the external device and adjust it to a suitable level.
	Make sure the speaker is charged.
Cannot play properly. The music is discontinuous	Check whether the distance between the speaker and the Bluetooth device is not out of the operating distance (10 meters max).
	Remove any obstacles between the speaker and the Bluetooth device.
	Move the speaker or Bluetooth device to get the best reception.
	Check battery charge status.

CARE AND MAINTENANCE

- Keep the unit away from magnetic objects, water and heat sources.
- Use a clean soft damp cloth to clean the device. Never use chemical cleaners that could damage the fnish of the unit.

CAUTION: NEVER ALLOW ANY WATER OR OTHER LIQUIDS TO GET INSIDE THE UNIT WHILE CLEANING.

TECHNICAL SPECIFICATIONS

Bluetooth version	V 5.1
Bluetooth distance	About 10m
Built-in battery	Rechargeable Lithium,3600mAh for speaker; 1200mAh for microphone
Power supply	DC 5V - 1A (USB-C input)
MAX output power (RMS)	15W
Playing time	About 3 hours at 70% volume
microSD	Supported fle systems: FAT32 Max capacity: 64GB.
Supported formats microSD	mp3
Karaoke machine size	16.8(W)x16.8(D)x21.5(H)cm
Microphone size	5.0(W)x5.0(D)x17.5(H)cm
Machine Weight	2.0kg

FCC Statement

This equipment has been tested and found to comply with the limits for a Class B digital device, pursuant to part 15 of the FCC Rules. These limits are designed to provide reasonable protection against harmful interference in a residential installation. This equipment generates, uses and can radiate radio frequency energy and, if not installed and used in accordance with the instructions, may cause harmful interference to radio communications. However, there is no guarantee that interference will not occur in a particular installation. If this equipment does cause harm full interference to radio or television reception, which can be determined by turning the equipment off and on, the user is encouraged to try to correct the interference by one or more of the following measures:

- Reorient or relocate the receiving antenna.
- Increase the separation between the equipment and receiver.
- Connect the equipment into an outlet on a circuit different from that to which the receiver is connected.
- Consult the dealer or an experienced radio/TV technician for help.

Caution: Any changes or modifications to this device not explicitly approved by manufacturer could void your authority to operate this equipment.

This device complies with part 15 of the FCC Rules. Operation is subject to the following two conditions:

(1)This device may not cause harmful interference, and (2) this device must accept any interference received, including interference that may cause undesired operation.

The device has been evaluated to meet general RF exposure requirement.
The device can be used in portable exposure condition without restriction.