Outdoor Generator

User Manual

PORTABLE POWER STATION

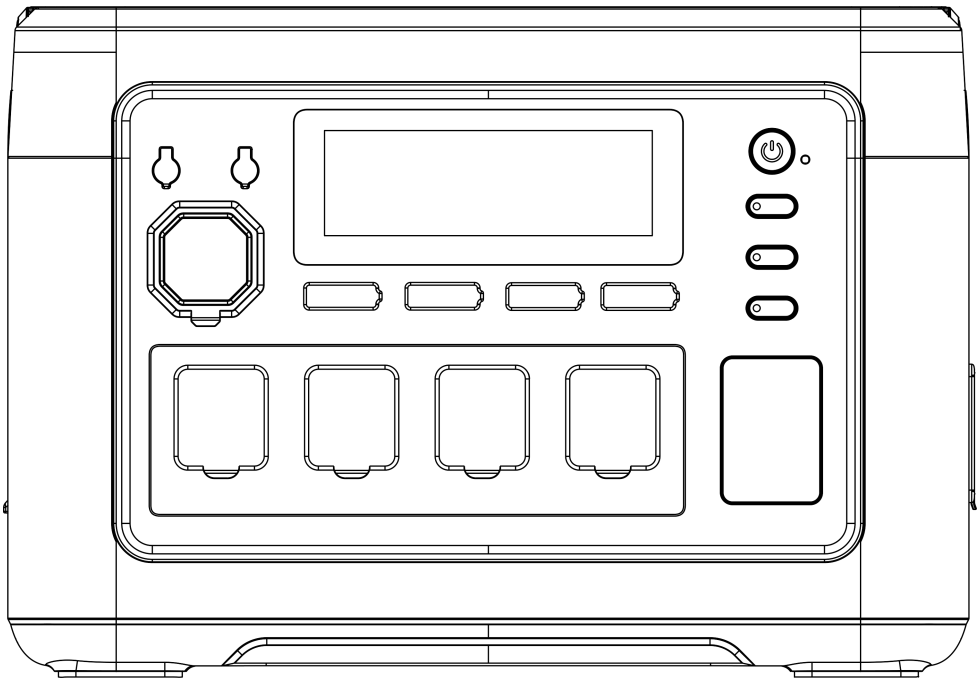

We deeply appreciate you for purchasing the P1500 Portable Energy Storage Power Supply.
Be sure to read this book carefully before using the product to ensure you use it correctly.
The book is required for product reimbursement. Consequently,it is advisable to keep it.
alongside the invoice and other purchase certificates.
To guarantee the safety of this product during transportation, it is only about 30% charged when it is packed. As such, you are required to charge it immediately after opening and before use.
Please avoid the use of extension cords or cable taps, as this product can be charged directly from wall sockets etc. When using two or more sockets for charging, please avoid using any other products on the same socket.

Content

Disclaimers ---------- 1

Packing List ---------- 2

Precautions for use ---------- 2

Specifications ---------- 3

Product Description ---------- 3

Introduction to Display Interface ---------- 7

UPS mode ---------- 8

UPS connection diagram ---------- 8

Solar panel connection solution ---------- 9

Onboard charging ---------- 10

Product Parameters ---------- 11

FAQ ---------- 12

Maintenance ---------- 13

Disclaimers

Before using the product, please read the user manual carefully to ensure that you fully understand it before use. After reading, please keep the user's manual in a safe place for future reference. If you use this product incorrectly, you may cause serious injury to yourself or others, as well as product damage and property damage.

Once you use this product, you can be deemed to have understood, recognized and accepted all the terms of this manual. Users undertake responsibility for their own actions and all the consequences that may arise therefrom.

Our company does not assume any responsibility for any loss caused by users' failure to use the product in accordance with the User Guide. In order to comply with laws and regulations, the company has the final interpretation of this document and all related documents of this product.

Packing List

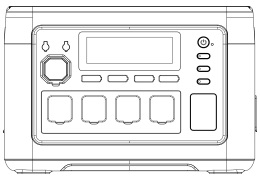

Portable Energy Storage Power Supply

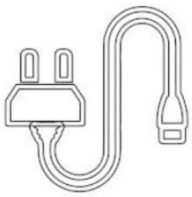

AC power cord

User Guide

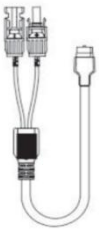

XT60-MC4 Cable

XT60-Car Charger Cable

Precautions for use

1. Please avoid high temperature and humidity. Please avoid using the product in direct sunlight and or near a fire.
2. Please be sure not to disassemble or modify the product, as it may cause malfunction or even a fire.
3. Please dispose off or recycle the product in accordance with the methods stipulated by local laws.
4. Be careful not to drop the product from a high place or expose it to any form of strong impact.
5. Please store or use the product out of the reach of children.
6. Please use the company's genuine products for the accessories. Customers who use non-genuine products and suffer adverse consequences as a result, cannot enjoy free maintenance.
7. When using this product, please do not interfere with the cooling of the product, please empty the ventilation space of more than 30CM from the side suction and exhaust port.
8. When the product is not in use, please put the body power off and unplug the power cord. Please avoid storing the product in a place with high temperature, high humidity and direct sunlight.
9. If you need to store the product for a long period of time, please make sure to deplete the charge once every 3 months, and then recharge it to about 50%.
10. If there is any doubt that the product body, the auxiliary line and the connecting equipment are defective, please do not continue to use the product. Instead, contact the after-sales personnel to solve the problem in time.
11. Please do not store the product for a long time in the car or field warehouse or other places that may experience extreme high and low temperature, to prevent the battery life from shortening amongst other failures.

Specifications

Capacity	Cycle life	Weight	Size	Cigar Lighter*1
LiFePo4 51.2V	≥3500	15.2KG	L346*W228*H251mm	12V/10A
USB-A*2	USB-C*1	USB-C*1	DC5521Output*2	LED Light
QC3.0 18W	PD-20W	PD-100W	12V/3A	5W
AC			AC Input	PV/DC Input
1800W AC120V 50/60HZ			AC Input 120V/1200W	PV/DC Input 12V-50V/11A 500W(MAX）

Product Description

This product is a portable energy storage power supply, suitable for home emergency power backup, outdoor travel, and emergency disasters that require power. In addition, it can also be used for outdoor work, amongst other applications.

This product has built-in lithium iron phosphate battery, which supports AC fast charging, vehicle charging, and solar photovoltaic panel charging. (This product has UPS function, and when the utility power fails, it can be switched on within 10ms for this product to supply power to electric equipment.)

The AC output of this product is pure sine wave waveform, and can manually be converted from 50HZ to 60HZ to provide better protection for electrical appliances.

This product comes with a telescopic dragging trolley bar, convenient for you to carry this product easily in.

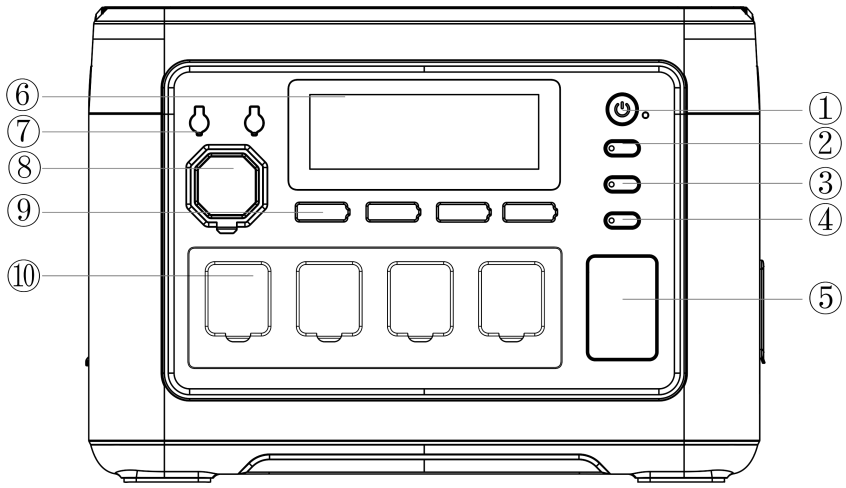

① Power switch

② DC switch

③ AC switch

④ LED light switch

⑤ LED light

⑥ LCD screen

⑦ DC5521

⑧ Cigar Lighter

⑨ USB-A/Type-C

⑩AC Output port

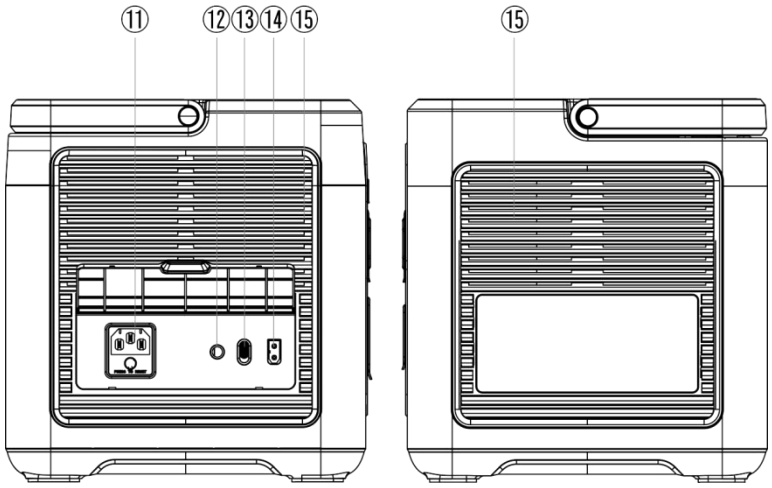

⑪AC charging port /Overload protection button

⑫ External grounding port

⑬ AC fast/slow charging toggle switch

⑭ PV/Car input port

⑮Cooling air inlet/ outlet

① Power switch

Use: Press and hold the power button for 3S to revive the system, turn on the LCD display, and press and hold it again for 3S to turn off the power system.

② DC switch

Use: Short press the DC button to open the DC output port in the power-on state, and short press it again to close it.

Cigar Lighter*1	DC5521Output*2	USB-A*2	USB-C*1	USB-C*1
12V/10A	12V/3A	QC3.0 18W	PD-20W	PD-100W

③ AC switch

AC switch(AC output port*4, the total electrical power load should be less than 1800W).

Use: Short press the AC button to open the AC output port in the power-on state, and short press it again to close it.

1. AC output voltage and frequency standards vary in different countries. Please check the AC voltage and frequency of the equipment before use.

2. Long press the AC button+ USB button for 3 seconds to achieve frequency switching.

3. By pressing the AC button 10 times in a row, the AC output voltage can be switched in 100V/110V/120V.

④LED switch ⑤LED light

Usage: Short press the LED button to turn on the constant light mode when turned on, short press the LED button again to turn on the SOS mode, and short press the LED button again to turn on the flashing mode.

1. Long press the LED switch to turn on the mute mode, and then long press the LED switch again to turn off the mute mode

⑥LCD screen

Display the power and usage status of the product.

⑦DC5521

Output：12V/3A

⑧Cigar Lighter

Output：12V/10A

⑨USB-A/Type-C

USBQC3 . 0	(5 -12V18W)*2
Type-C	(5-12V20W)*1
Type-C	(5 -15V/3.0A;20V/5A 100W)*1

⑩AC Output port

Output：120V/1800W，50/60Hz， pure sine wave

⑪AC charging port/Overload protection button

After connecting the utility power to the AC charging port using the standard AC charging cable, you can charge this product.
Please ensure that the AC voltage and frequency of the device are consistent with the utility power before using the AC port for charging.

In case of unstable power voltage supply due to lightning or other reasons, or if there is a large voltage input at the AC terminal, the overload protection function (safety circuit breaker) will be activated to protect this product and disconnect the AC input port from external devices.
Please restore the AC input function of this product in the following order.
1. Turn off the power button and unplug all ports.
2. After confirming that there is no abnormality in each part, turn on the power button.
3. Press the overload protection button and turn on the AC cable to resume AC input.

⑫External grounding port

If needed, users can choose their own grounding wire to connect the product to the ground. The product is not grounded by default in non special scenarios

⑬AC fast/slow charging fluctuation switch

When the fluctuation switch is set to AC fast charging mode, it is necessary to ensure that the output voltage of the power supply equipment meets 100-120V. When the output voltage of the charging device is 100-120V, the maximum charging power is 1000W.

When the fluctuation switch is set to AC slow charging mode, it is necessary to ensure that the output voltage of the power supply equipment meets 100-120V. When the output voltage of the charging device is 100-120V, the maximum charging power is 500W

⑭PV/Car Input Port

The product can be charged by connecting the solar panel with the standard PV/DC port charging cable.
1. The input of the solar panel can be up to 500W, woth the maximum vlotage being 50V.
2. If the PV/DC input port is charged with a voltage higher than 50V, the product will be damaged.A failure that is not covered by the warranty.

⑮Cooling air inlet/ outlet

The cooling fan will run automatically when the product reaches a certain temperature during use. Please avoid blocking the cooling air inlet/ outlet and do not place objects within 30cm of the cooling air inlet/ outlet during the use of the product.

Introduction to Display Interface

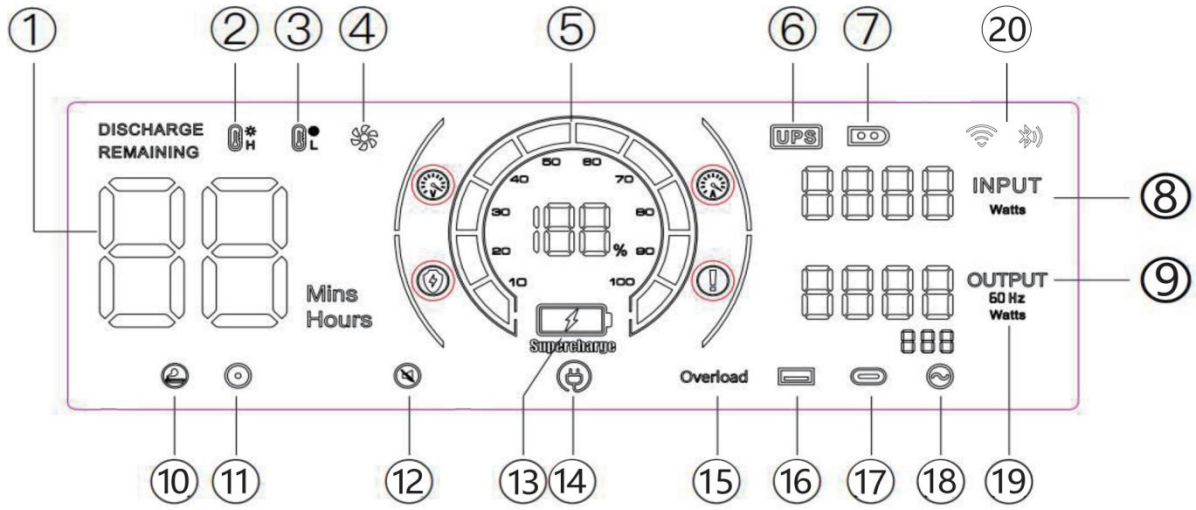

①Using time/ charging time
②High temperature protection
③Low temperature protection
④Fan status
⑤Power status
⑥UPS mode
⑦PV charging mode
⑧Total input power
⑨Total output power
⑩Cigarette lighter(12V) output
⑪DC(12V) output
⑫Silent mode
⑬Fast charging mode
⑭Slow charging mode
⑮Overload protection
⑯USB output
⑰PD output
⑱AC output
⑲Frequency Switching
⑳WIFI/ Bluetooth

Note on screen display

When this icon is on, please ensure that the air inlet on both sides of the product is not blocked.

When the indicator icon flashes, it means that the internal temperature of the machine is too high or too low, at which time the device opens the intelligent protection program, forcing the machine to stop working normally. (Wait for the machine to return to normal temperature, then you can start working again).

When the indicator icon is flashing, it means the utility input is abnormal, please check the charging end connection.

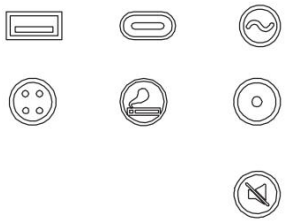

UPS mode

The product has a bypass mode that can complete the output directly from AC power without the need to pass through the battery.

In UPS mode, when the city's AC input is suddenly interrupted, the product can automatically switch to battery power within 10ms, guaranteeing the normal operation of AC equipment..

UPS connection diagram

As shown in the figure below, the product is connected between the socket and the electrical appliances, and the product's power is ON.

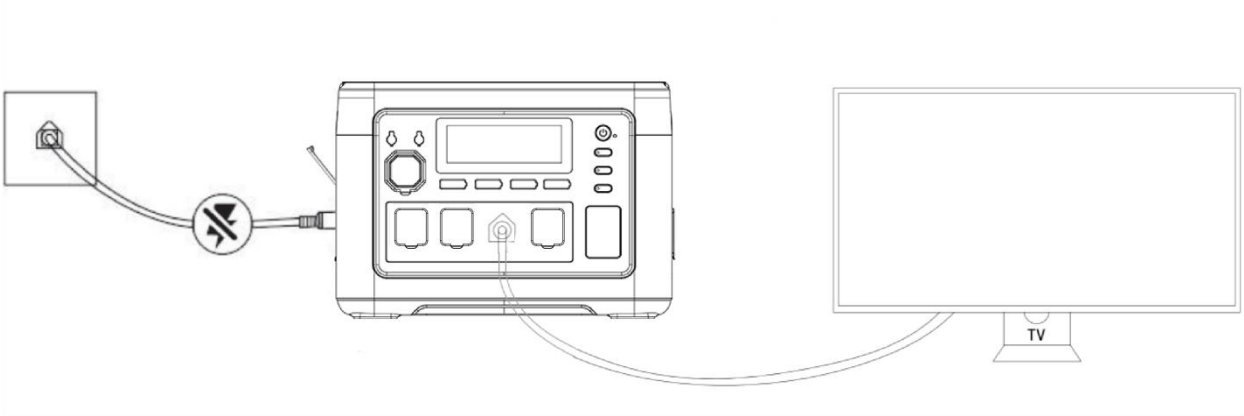

Once you turn on the electrical device, it makes use of grid AC power directly. When the utility power is cut off while in this state, it will automatically switch to the product's internal battery power.

※Japanese standard and American standard， the maximum current of AC output is 10A； With the Chinese standard, British standard, European Standard, Korean standard In UPS mode, the maximum current of AC output is 10A, and when the AC output exceeds 10A, the UPS icon flashesIndicates overload while the AC icon turns off output interrupt.

Solar panel connection solution

This porduct can both be connected to, and charged by the solar panel.

With a solar panel power of 500W, and at least 2 hours, full charge can be achieved.(Solar panel charging maximum 500W, maximum input voltage 50V)

※ Solar panel charging power, with factors like the weather, climate and other conditions affecting the decision.

※ Solar panel voltage over 50V will damage the device and may be out of warranty.

Solar panel connection scheme

* Solar charging

Option 1

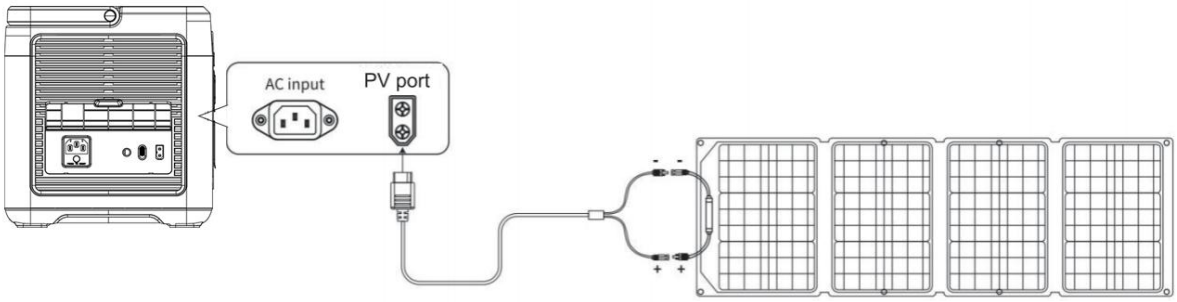

Solar panel(Not include accessory)

Option 2

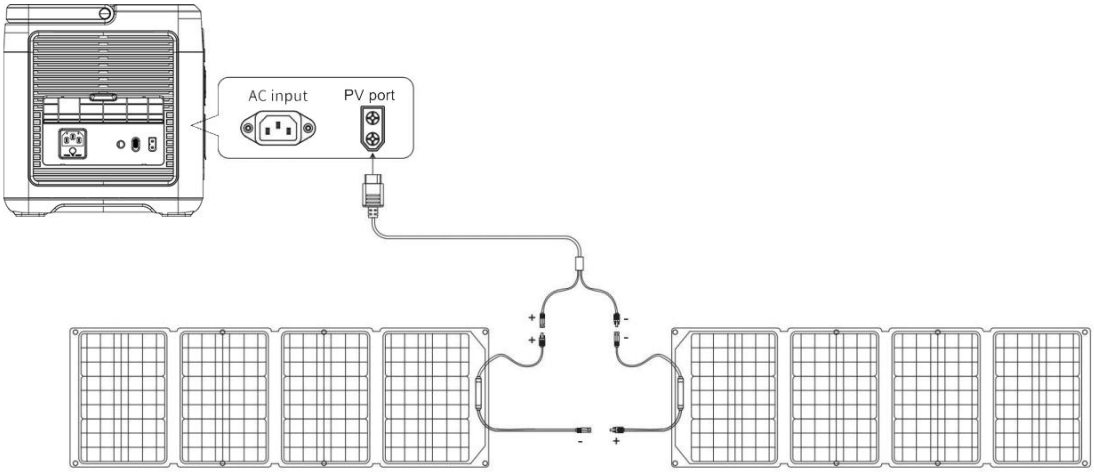

Solar panel Solar panel

Solar panel(Not include accessory)

Onboard charging

This product can be charged by the cigarette lighter (accessory: hereinafter referred to as ACC) in the car by using the ACC charging cable for mobile charging.

Turn the power of the product ON, connect the ACC charging cable to the cigarette lighter in the car and the Anderson connector on the side of the product, turn on the car engine, and the LED of the product will show the input power. The LED of this product will show the input power.

※ Onboard charging ought to be done when the car engine is started. Failure to start the engine may cause the car's battery to run out of power.

※ Onboard charging is usually low power of 90-240W and the charging time is long (12V/8A or 24V/10A). If fast charging is required`, utility power is advised.

.

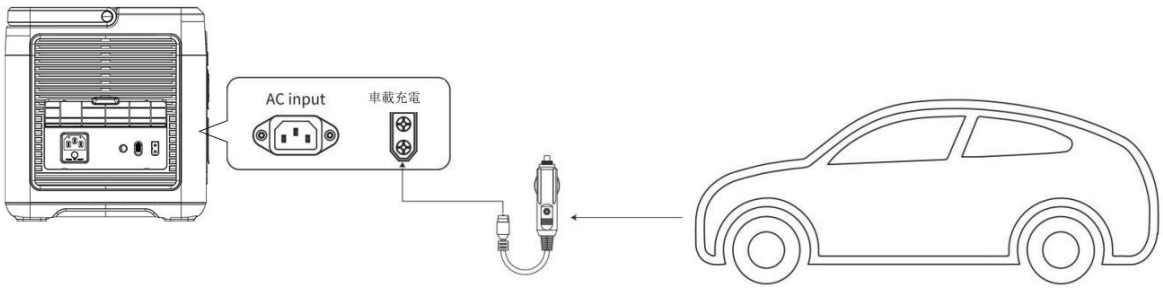

(Not include accessory)

Product Parameters

Product Name	P1500 PLUS
Product size	L346*W228*H251mm
Product weight	15.2kg
Battery Capacity	1536WH
AC charge	AC120Vac （USA)Max1200W
PV input	12V-50V , 500W
AC output	120V/1800W， 50/60Hz, pure sine wave
USBQC3.0	(5 - 12V18W)*2
Type-C	(5-12V20W)*1
Type-C	(5 -15V/3.0A;20V/5A 100W)*1
DC5521	(12V/3A) *2
Car charger output	(12V/10A)*1
UPS	120V/MAX14A
Charging temperature	0-40℃
Operating temperature	- 10 ~ 40℃
Ambient humidity	<90%RH
Cycle charge	>3500

FAQ

1. The appliances power is within the rated output power range of the product but it cannot be used?

The power of the product is low and needs to be recharged.

When some electrical appliances are started, the peak power is higher than the product power, or the nominal power of the electrical appliance is greater than the product power;

2. Why is there a sound when using it?

The sound comes from the fan or the relay when you start or using the product.

3. Is it normal the charging cable heat up during use?

Yes, it is. The cable complies with national safety standards and has applied the certificates.

4. What kind of battery we use in this product?

The battery type is lithium iron phosphate.

5. How can we know the remain using time?

Please check the data on the screen, it will show the remain using time when you turn on.

6. How can we confirm the product is recharging?

When the product is under charging, the product screen will show the input wattage, and the power percentage indicator will blink.

7. How should we clean the product?

Please use a dry, soft, clean cloth or tissue to wipe the product.

8.How to storage?

Please turn off the product and place it in a dry environment. Do not place this product near water.

For long-term storage, we recommend to use the product every three months(Run out the remain power first and recharge it to the percentage you want, such as 50%).

9. Can we take this product on airplane?

NO, you can't.

10.Is the actual output capacity of the product the same as the target capacity in the user manual?

The capacity of the user manual is the rated capacity of the battery pack of this product. Because this product has a certain efficiency loss during the charging and discharging process, the actual output capacity of the product is lower than the capacity specified in the user manual.

Maintenance

1. It is recommended to use or store this product in an environment of 20℃ to 30° C, away from water, heat, and other metal objects.

2. For safety reasons, please do not store this product in an environment higher than 40℃ or lower than - 10℃ for a long time.

3. If it is not used for a long time, please charge it to 50% before storing. If the battery is left unused for a long time when the battery is seriously insufficient, it will cause irreversible damage to the battery and shorten the cycle life of the product.

FCC Caution:

This device complies with part 15 of the FCC Rules. Operation is subject to the following two conditions: (1) this device may not cause harmful interference, and (2) this device must accept any interference received, including interference that may cause undesired operation.

Any changes or modifications not expressly approved by the party responsible for compliance could void the user's authority to operate the equipment.

NOTE: This equipment has been tested and found to comply with the limits for a Class B digital device, pursuant to Part 15 of the FCC Rules. These limits are designed to provide reasonable protection against harmful interference in a residential installation. This equipment generates, uses and can radiate radio frequency energy and, if not installed and used in accordance with the instructions, may cause harmful interference to radio communications. However, there is no guarantee that interference will not occur in a particular installation.

If this equipment does cause harmful interference to radio or television reception,which can be determined by turning the equipment off and on, the user is encouraged to try to correct the interference by one or more of the following measures:

-- Reorient or relocate the receiving antenna.

-- Increase the separation between the equipment and receiver.

-- Connect the equipment into an outlet on a circuit different from that to which the receiver is connected.

-- Consult the dealer or an experienced radio/TV technician for help.

To maintain compliance with FCC’s RF Exposure guidelines, This equipment should be installed and operated with minimum distance between 20cm the radiator your body: Use only the supplied antenna.