Antenna test report V1.0

Aoedi Technology Huizhou) Co., Ltd
Model/Part No.: PCB_AD-890_V1.0

测试环境

- The antenna characteristics use the microwave anechoic chamber of the ETS test system, the size of the microwave anechoic chamber is 7m x 4m x 3m, and
- the test frequency is 700MHz---6GHz.
- S11 testing using Agilent E5071B network analyzer

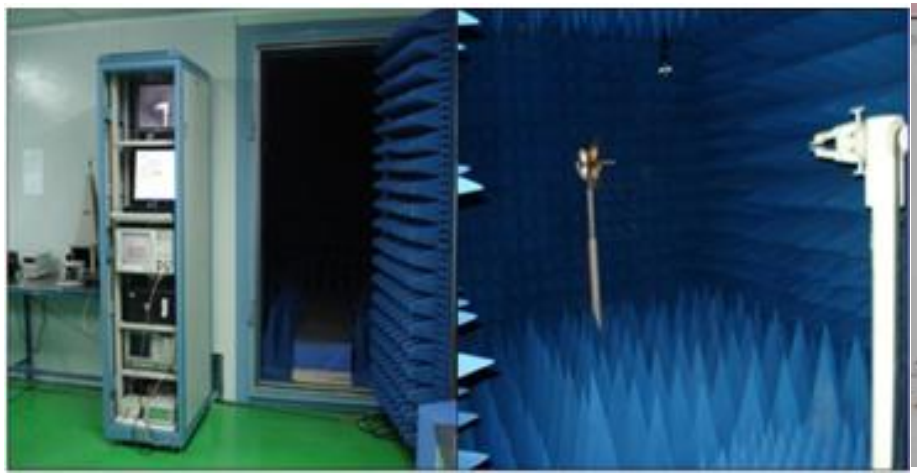

1.A N T P L A C E M E N T

2.matching circuit:

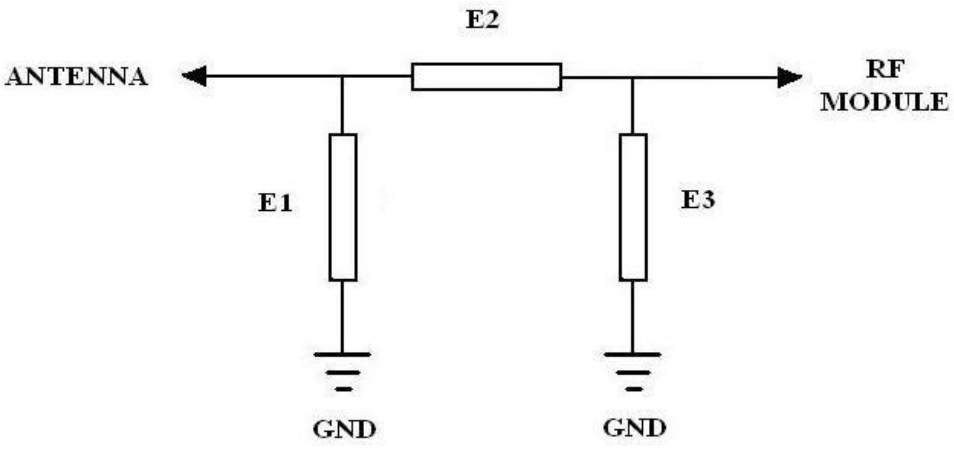

ANT	
Element	Value
E1	**无**
E2	**无**
E3	**无**

3. QX2400-44

Return Loss

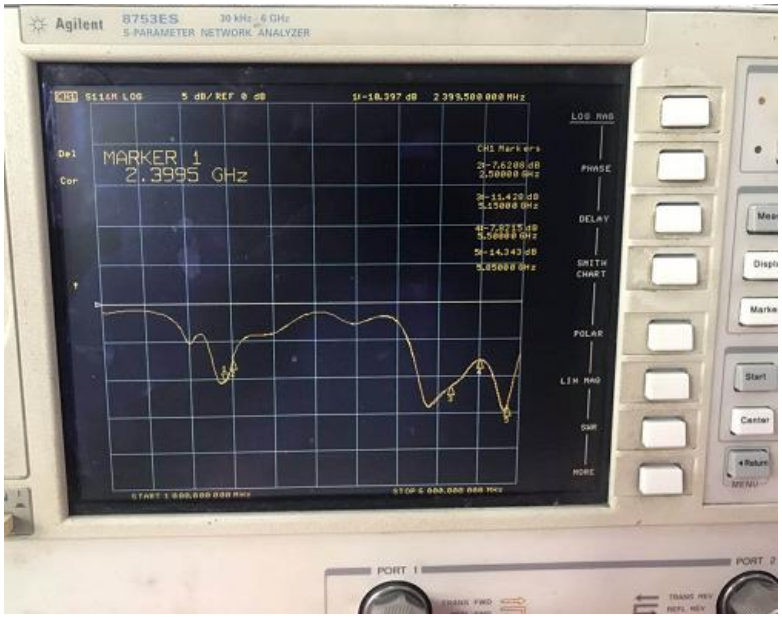

Smith

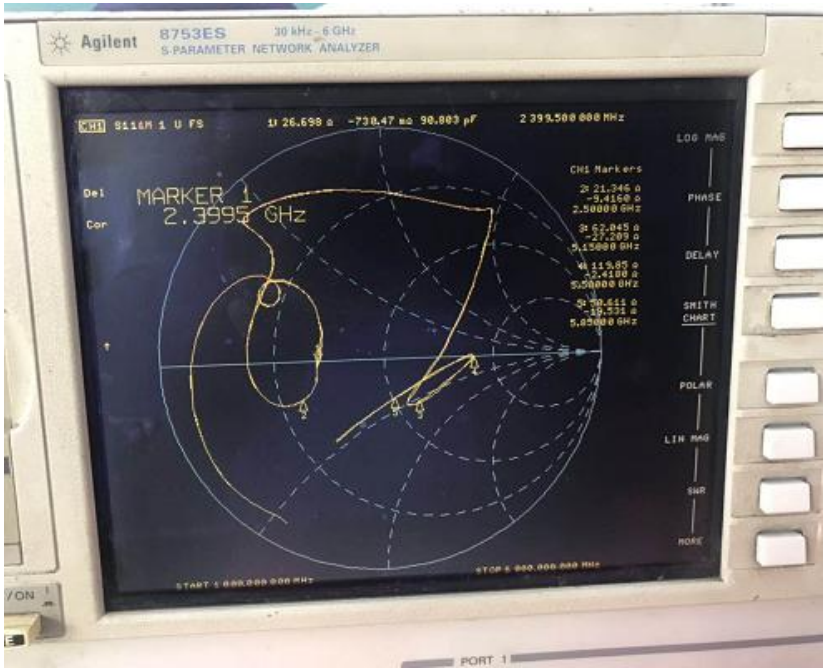

3. QX2400-45

Return Loss

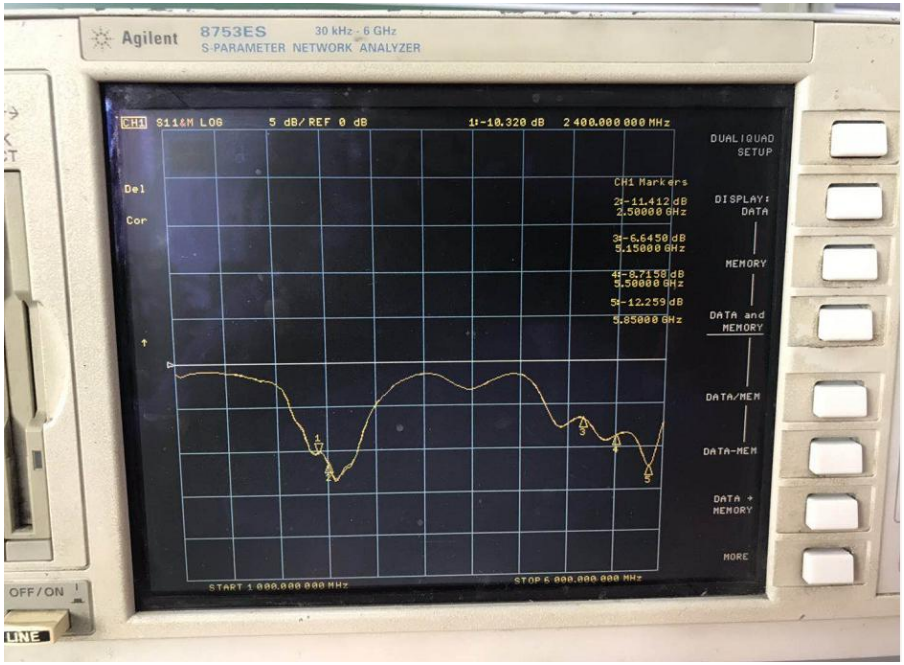

Smith

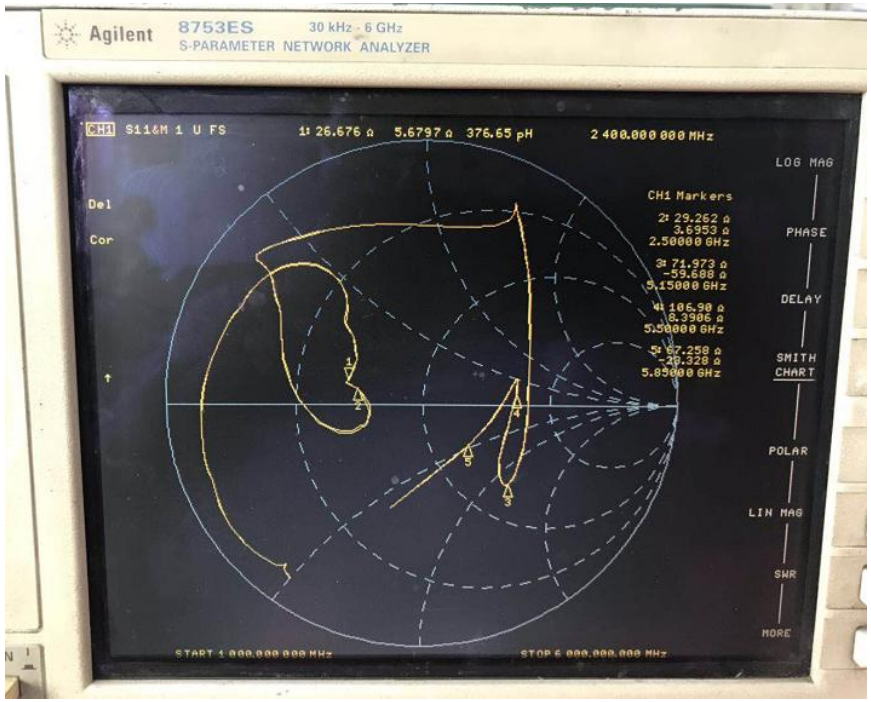

4. QX2400-44 2.4G

Freq (MHz)	Effi (%)	Effi (dB)	Gain (dBi)
2400	41.65	-4.04	0.96
2410	39.78	-4.26	0.71
2420	39.33	-4.22	0.54
2430	43.89	-3.79	0.89
2440	46.85	-3.48	1.00
2450	44.61	-3.71	0.85
2460	42.19	-3.98	0.49
2470	39.27	-4.33	0.22
2480	36.36	-3.85	0.46
2490	37.91	-3.18	0.04
2500	35.45	-3.02	0.66

4. QX2400-45 5G

Freq (MHz)	Effi (%)	Effi (dB)	Gain (dBi)
5150	26.09	-6.26	-1.84
5160	26.26	-6.22	-2.03
5170	27.02	-6.07	-1.99
5180	26.24	-6.23	-2.2
5190	25.22	-6.44	-2.3
5200	26.03	-6.27	-2.2
5210	26.94	-6.09	-2.14
5220	27.65	-6.05	-2.08
5230	30.02	-5.79	-2.13
5240	27.74	-6.13	-2.44
5250	26.74	-6.33	-2.36
5260	27.17	-6.04	-2.29
5270	28.54	-5.78	-1.82
5280	28.58	-5.77	-1.91
5290	30.25	-5.65	-1.86
5300	26.96	-6.08	-2.45
5310	27.14	-6.05	-2.37
5320	29.57	-5.6	-2.04
5330	30.25	-5.48	-1.68
5340	30.71	-5.4	-1.52
5350	30.03	-5.52	-1.4
5360	28.61	-6.02	-1.99
5370	29.68	-5.58	-1.71

Freq (MHz)	Effi (%)	Effi (dB)	Gain (dBi)
5380	29.88	-5.54	-1.41
5390	31.02	-5.35	-1.17
5400	35.1	-4.81	-0.56
5410	30.77	-5.39	-1.04
5420	29.99	-5.22	-1.02
5430	29.91	-5.54	-1.23
5440	33.06	-5.18	-0.83
5450	34.83	-4.85	-0.39
5460	31.85	-5.21	-0.7
5470	29.53	-5.6	-0.96
5480	27.3	-6.02	-1.63
5490	30.08	-5.78	-0.83
5500	32.15	-5.16	-0.2
5510	32.73	-5.07	-0.1
5520	32.68	-5.08	-0.38
5530	26.4	-6.2	-1.31
5540	26.51	-6.17	-1.38
5550	31.09	-5.34	-0.73
5560	33.62	-5.03	0.11
5570	36.95	-4.56	0.59
5580	29.86	-5.54	-0.41
5590	27.27	-6.02	-1.3
5600	27.24	-6.03	-0.95
5610	28.38	-5.81	-0.65

Freq (MHz)	Effi (%)	Effi (dB)	Gain (dBi)
5620	36.16	-4.66	0.48
5630	31.87	-5.21	-0.02
5640	27.24	-6.03	-0.78
5650	27.08	-6.26	-1.14
5660	26.56	-6.27	-0.99
5670	33.43	-5.06	0.47
5680	33.43	-5.06	0.28
5690	28.21	-5.84	-0.19
5700	26.72	-6.55	-1.42
5710	24.46	-7.08	-1.59
5720	29.48	-6.08	-0.59
5730	31.91	-5.2	0.23
5740	31.64	-5.24	0.29
5750	26.93	-6.09	-0.7
5760	23.02	-7.04	-1.45
5770	27.44	-6.91	-1.08
5780	28.63	-5.87	-0.26
5790	34.24	-5.04	0.59
5800	31.02	-5.35	0.11
5810	26.06	-6.27	-1.04
5820	25.48	-6.19	-0.91
5830	27.66	-6.05	-0.3
5840	32.76	-5.01	0.57
5850	35.73	-4.82	0.68