DENFEiC

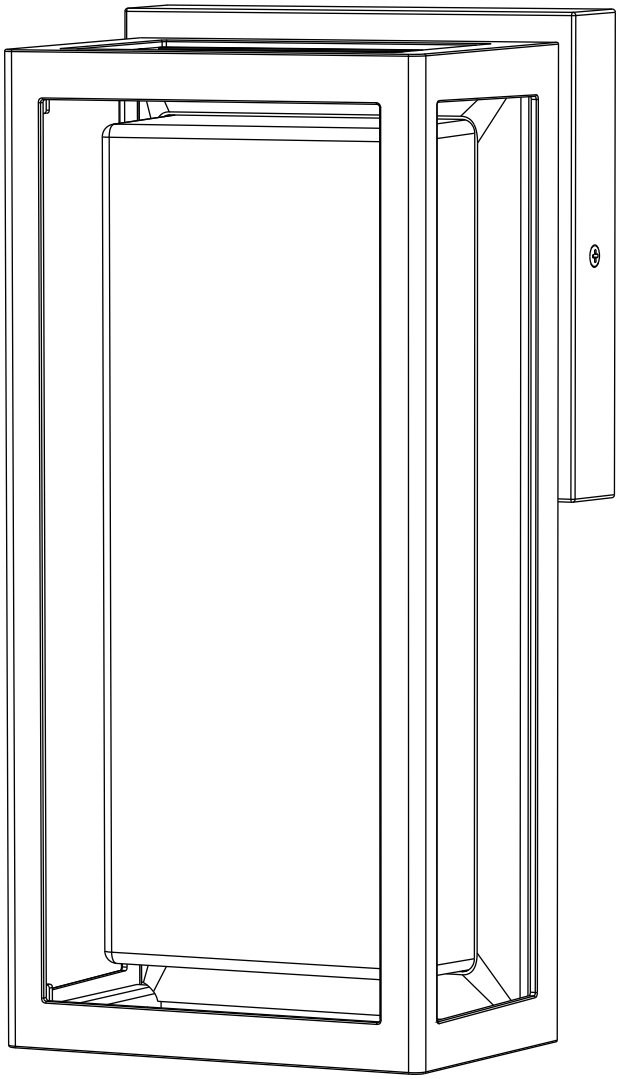

Model:DSWW-001

Smart Wall Lamp

User Manual

Safety Instructions

WARNING: TO AVOID ELECTRICAL SHOCK, BE SURE TO SHUT OFF POWER BEFORE INSTALLING THIS FIXTURE.

Read and follow all the safety instructions:

- If you are not familiar with the local electrical codes, it is recommended that you consult with a qualified electrician.
- Before installation, shut off power at the main fuse or circuit breaker box. Be aware that turning off the wall switch is not sufficient to prevent electrical shock.
- To avoid sensor damage by lightning or electrical surge, make sure the grounding wire is securely connected.
- Do not attempt to take the fixture apart.

Note: The fixture only associates with the on/off switch. The brightness-control switch might not be feasible.

Introduction

Thank you for choosing Denfeic smart wall light. The product is suitable for wet locations, ideal for your entrance, patio, garden, garage, porch, backyard etc. On the Denfeic app, you can switch the light on and off, adjust the brightness, customize the lighting effects, and set the music mode that syncs lighting to the music.

Specifications

Product Name	Model Number	Voltage	Working Temperature
Denfeic Smart LED Wall Sconce	DSWW-001	100-240V AC 50/60Hz	-4°F~140°F

What You Get

PICTURE	DESCRIPTION	QUANTITY
A	Fixture	1
B	Mounting Plate	1
C	Junction Box Mounting Screws	2
D	Fixture Mounting Screws	2
E	Wire Connectors	3

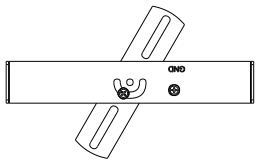

(B) Mounting Plate X 1

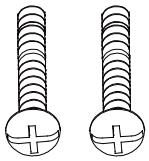

(C) Junction Box Mounting Screws X 2

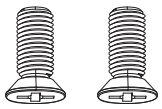

(D) Fixture Mounting Screws X 2

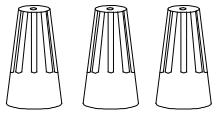

(E) Wire Connector X 3

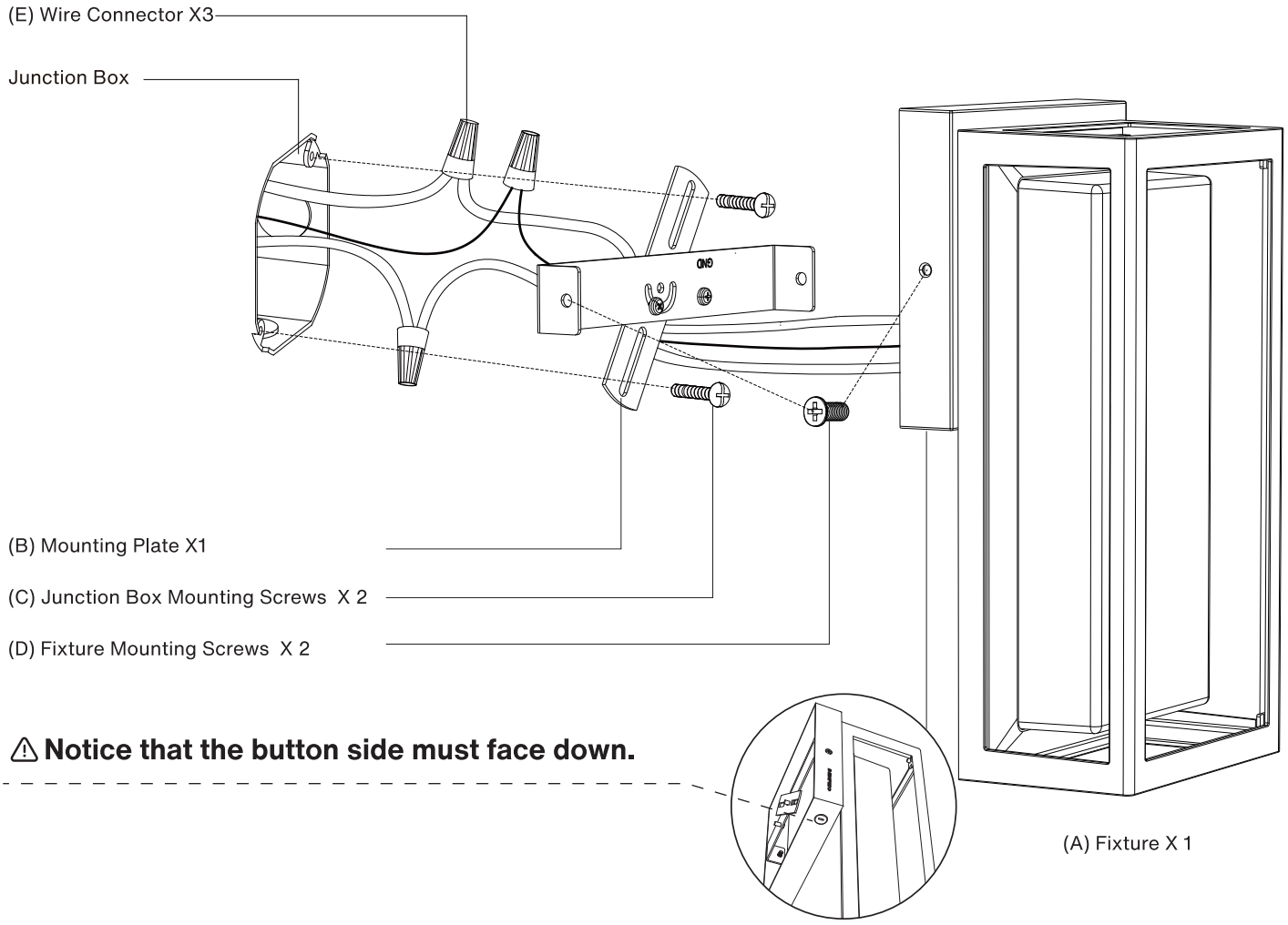

⚠ **Notice that the button side must face down.**

Installation Instructions

1. Turn off the power source before you connect the fixture to your house.

2. Dissemble Mounting Plate (B) on the back of the Fixture (A) with a screwer.

3. Attach the Mounting Plate (B) to the junction box by tightening the two Junction Box Mounting Screws (C), make sure it is level so you won't install your fixture slantly.

4. Wind the grounding fixture wire to the green screw on the Mounting Plate (B).

5. Tangle the black fixture wire and the live wire together and use the Wire Connector (E) to roll and cap them firmly. Repeat the previous step to cap the white fixture wire and the neutral wire.

6. Tuck in all the wires carefully to the junction box behind the Mounting Plate (B).

7. Secure the Fixture (A) to the Mounting Plate (B) by tightening the two Fixture Mounting Screws (D).

8. (Optional) Use a silicone sealant (not included) to caulk between the fixture plate and the wall to prevent water penetration and bugs.

9. Installation is done. Turn power on at the main fuse or circuit breaker box.

How to Download the **Smart Life** App

The Smart Life App supports iOS 10.0 (or above) or Android 5.0 (or above) smartphones or tablets.

The Denfeic devices support 2.4GHz and 802.11 b/g/n bands. 5GHz is not supported.

- Search Smart Life to download the app from the App Store (iOS device) or Google Play (Android device).
- Turn on Bluetooth and connect your smartphone to the 2.4GHz Wi-Fi before adding Denfeic smart devices to the app.

ANDROID APP ON Google play

Download on the App Store

How to Connect to the **Smart Life** App

Physical Button

- Short press the button to turn on and change the light effect: Warm white>Cold white>Red>Green>Blue>Off.
- Long press for 5 seconds to enter pairing mode.

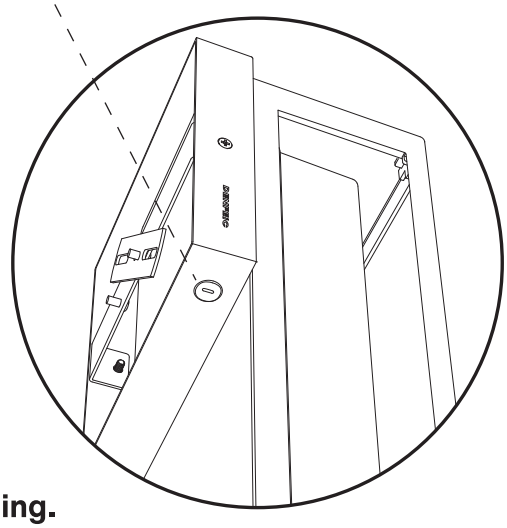

Before getting started, please make sure that your smartphone has been linked to the 2.4GHz Wi-Fi network. (5GHz is not yet supported).

Connect via Bluetooth

1. Long press the physical button for 5 seconds to enter pairing mode until your Denfeic light turns **red and breathing.**
2. Turn on the Bluetooth on your smartphone.
3. Launch the Smart Life App, click "+" > "Add Device" on the upper right to search for the device.
4. Click the "Add" and confirm the Wi-Fi network, click "Next" to start the connection.
5. When added successfully, click "Done" to finish the connection and your light should be **warm white**.

⚠ If your Denfeic light fails to connect via Bluetooth, please follow the instructions below to connect it to the Smart Life App. Again, please make sure that your smartphone has been linked to the 2.4GHz Wi-Fi network (5GHz is not yet supported).

Connect via Soft AP

1. Long press the physical button for 5 seconds to enter pairing mode until your Denfeic light turns **red and breathing.**
2. Launch the Smart Life App, click "+" > "Add Device" on the upper right.
3. Click to under "Add Manually", confirm the Wi-Fi network.
4. Click "Go to Connect" to enter the phone Settings>WLAN>Choose "SmartLife-XXXX".
5. Return to the Lintem App, take a few seconds to complete the "Connecting Device".
6. When added successfully, click "Done" to finish the connection and your light should be **warm white.**

FAQ

Failed to connect your smart wall light to the Smart Life App or the Wi-Fi network?

- Make sure your wall light is powered on.
- Make sure your Wi-Fi network is 2.4GHz (Not support 5GHz) and enter the correct password.
- Make sure the permissions allow the app to access your location and Bluetooth in your phone settings.
- If the Wi-Fi network is not strong enough, reset your router, get the device closer and try again.

If the issue still exists after the operation above, please contact our customer support. We will make things right for you.

Customer Support

If you have any questions about the device, please contact us at:
support@denfeic.com

This device complies with part 15 of the FCC Rules. Operation is subject to the following two conditions: (1) This device may not cause harmful interference, and (2) this device must accept any interference received, including interference that may cause undesired operation.

Any Changes or modifications not expressly approved by the party responsible for compliance could void the user's authority to operate the equipment.

Note: This equipment has been tested and found to comply with the limits for a Class B digital device, pursuant to part 15 of the FCC Rules. These limits are designed to provide reasonable protection against harmful interference in a residential installation. This equipment generates uses and can radiate radio frequency energy and, if not installed and used in accordance with the instructions, may cause harmful interference to radio communications. However, there is no guarantee that interference will not occur in a particular installation. If this equipment does cause harmful interference to radio or television reception, which can be determined by turning the equipment off and on, the user is encouraged to try to correct the interference by one or more of the following measures:

-Reorient or relocate the receiving antenna.

-Increase the separation between the equipment and receiver.

-Connect the equipment into an outlet on a circuit different from that to which the receiver is connected.

-Consult the dealer or an experienced radio/TV technician for help.

-This equipment complies with FCC radiation exposure limits set forth for an uncontrolled environment. This equipment should be installed and operated with minimum distance 20cm between the radiator & your body.

DENFEiC

Smart Life APP