Chip Antenna

Feature & Application

Anta Tek Chip Antenna, **RT-AC3216H832G45P** (**3216 2.4GHz Chip Antenna, Type H83**), is for connectivity application, like Bluetooth, Zigbee, WLAN, IEEE802.11b/g,…etc

This is a compact solution for portable and mobile devices, and can be used in SMD and refloew processes. High performance and high reliability of the chip antenna would be the best selection of embedded antennas.

Product Coding

The product part number (PN) can be determined by the following rules :

AC	3216	H	83	2G45	P
AC	3216	H	83	2G45	R
(1)	(2)	(3)	(4)	(5)	(6)

(1) Product Category	AC	Chip Antenna
(2) Size Code	3216	3216 series
(3) Model Code	H	Monopole type
(4) Type Code	83	Type 83
(5) Frequency Code	2G45	2.4GHz
(6) Packing Code	P	Paper Tape and Reel
	R	Embossed Tape and Reel

Mechanical SPEC

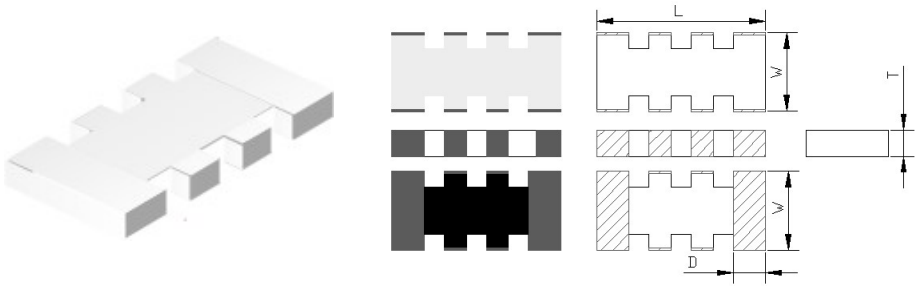

Part Number	L (mm)	W (mm)	T (mm)	D (mm)	Operating Temp. (°C)	Assembly
AC3216H832G45P	3.2±0.15	1.6±0.15	0.55±0.1	0.6±0.15	-40 ~ +85	SMD

Electrical SPEC

Part Number	AC3216H832G45P
Working Frequency Range	2400-2484 MHz
Peak Gain	4.60dBi (typ.)
Impedance	50 Ohm
Return loss	10 dB (max.)
VSWR	2 : 1 (max.)
Polarization	Linear
Azimuth Beamwidth	Omni-directional
Antenna Structure	Monopole

** All data base on Antatek's reference board, and the matching circuit is required.

Reference Board & Layout

Dimension of Reference Board

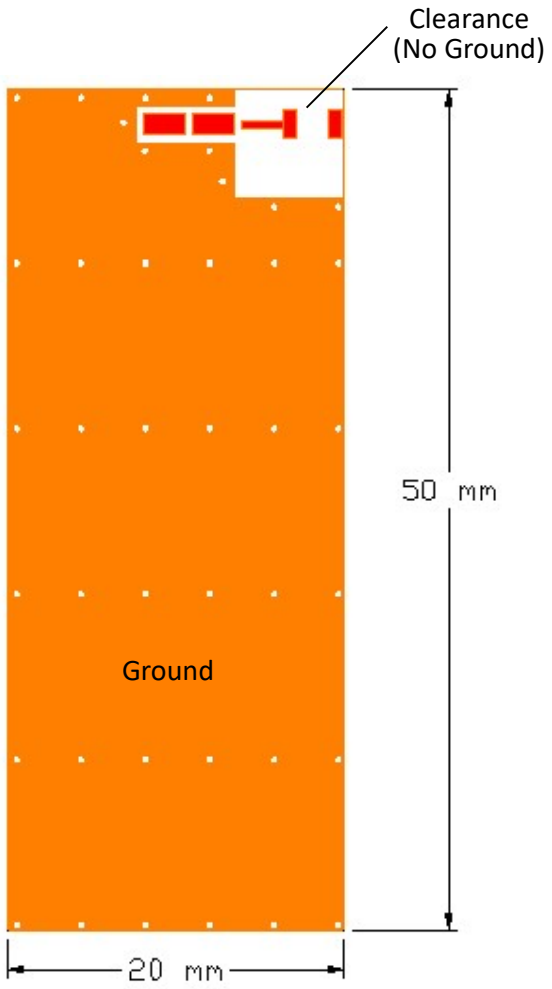

Antatek Reference Board

Dimesnion :

L : 50 mm

W : 20 mm

Dimension of Clearance & Footprint

Clearance :

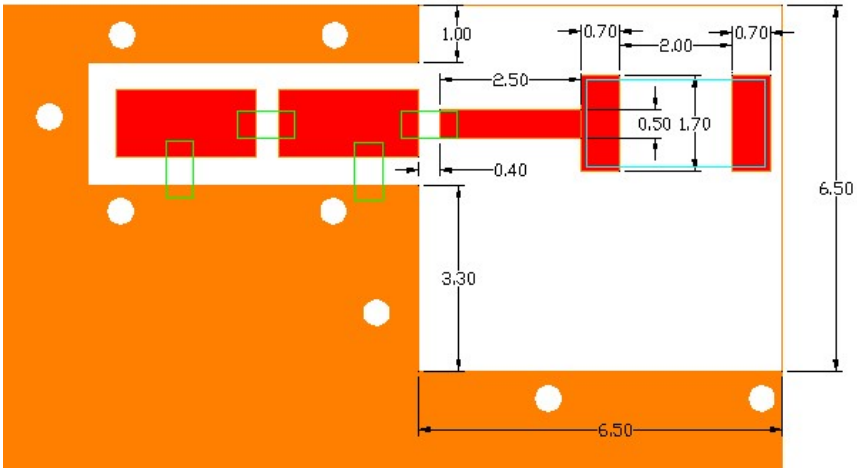

Footprint :

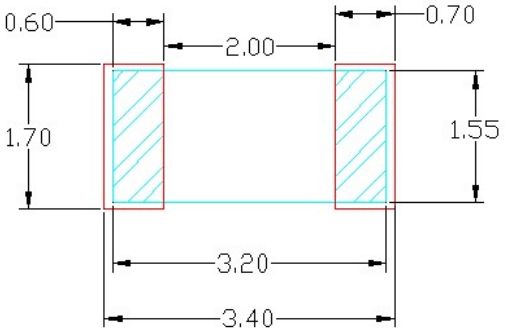

Unit : mm

Clearance of Antatek Refence Board :

6.5 mm x 6.5 mm

: Chip Antenna

: L/C matching components

: Land Pattern

Electrical Perforamnce

Matching Cirucit :

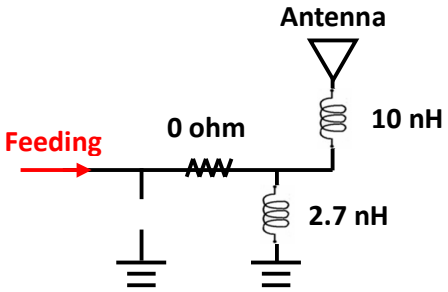

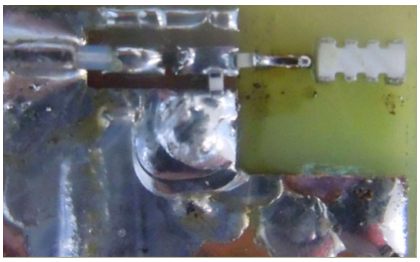

S-Parameter

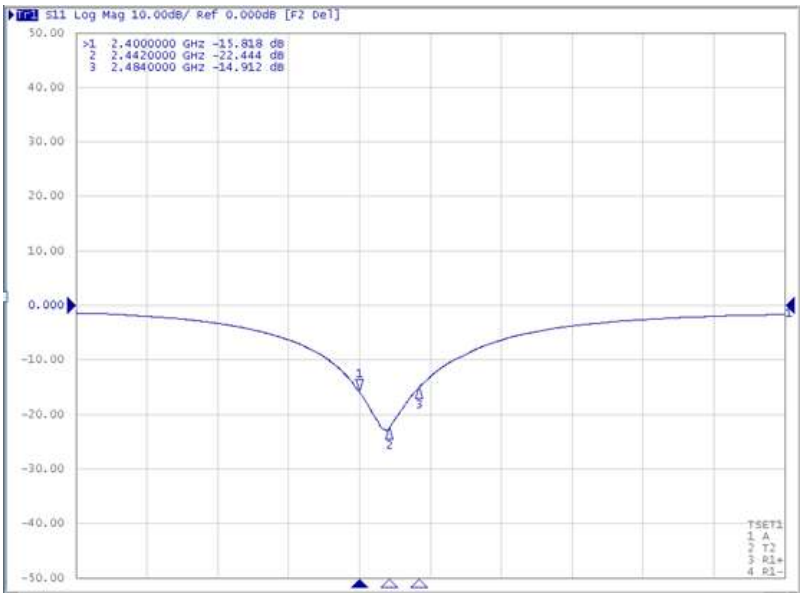

2400MHz	-15.8 dB
2442MHz	-22.4 dB
2484MHz	-14.9 dB

Antenna Patterns

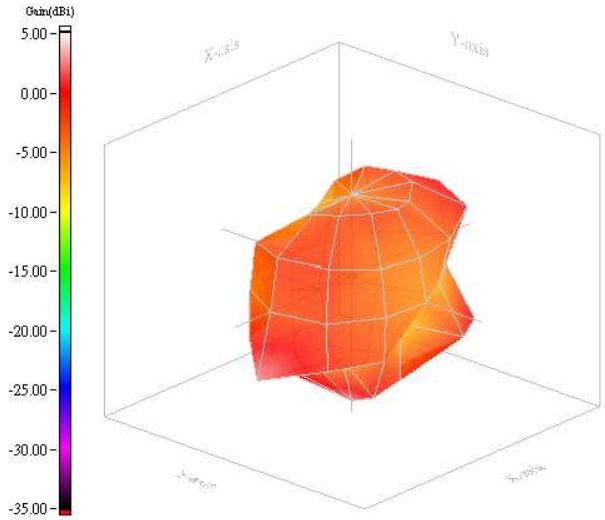

Frequency	2.442GHz
Max. Gain	4.60dBi
Mean Gain	-2.2 dBi
Directivity	5.18
Efficiency	60.2%

3216 H83 EVB Meansurement Data

S11 Meas.

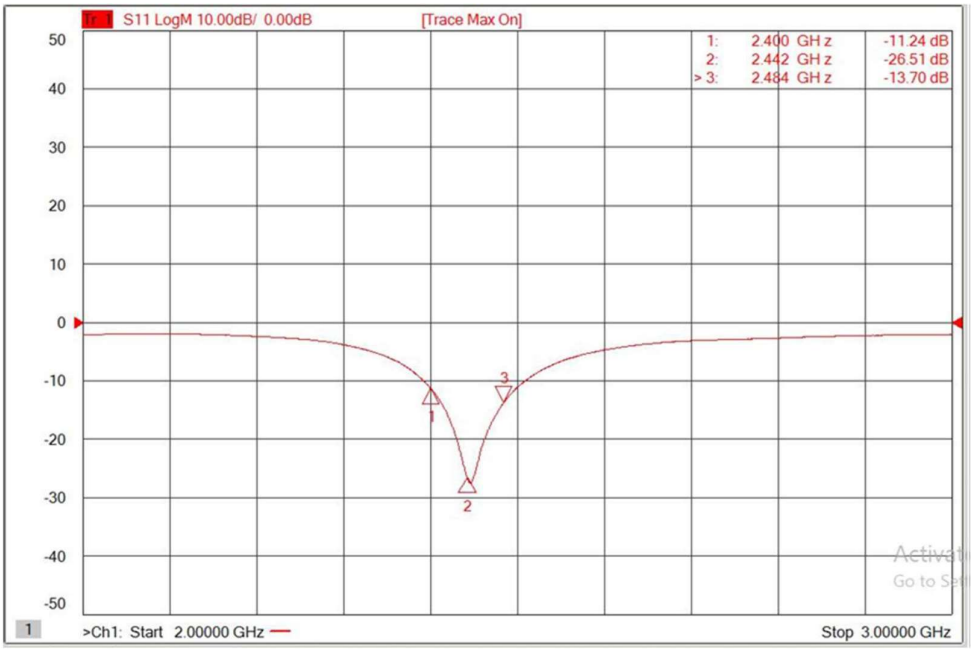

Antenna Pattern- Summary Table

Frequency (MHz)	2400	2442	2484
Peak Gain (dBi)	4.60	4.60	4.05
Average Gain (dB)	-1.46	-1.27	-1.89
Efficiency (%)	71.39	74.63	64.66
Directivity (dB)	6.06	5.87	5.95
Peak Gain Position (Theta)	150	150	150
Peak Gain Position (Phi)	120	120	120
Efficiency ThetaPol (%)	48.19	51.88	44.78
Efficiency PhiPol (%)	23.20	22.75	19.87
Upper Hem. Efficiency (%)	25.39	26.15	24.72
Lower Hem. Efficiency (%)	74.61	73.85	75.28

Packing Information

Paper & Reel

Paper :

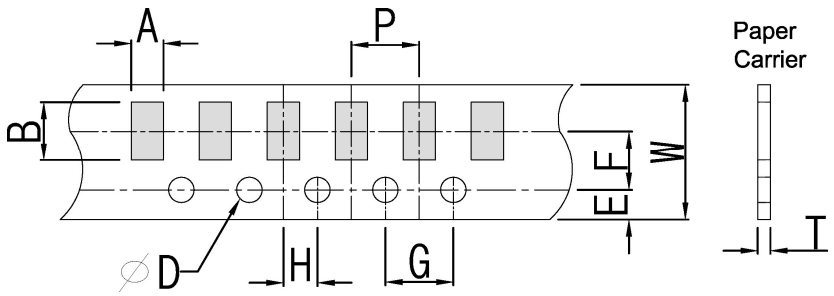

Unit : mm

A	B	W	E	F	G	H	T	D	P
1.90 ±0.20	3.50 ±0.20	8.0 ±0.20	1.75 ±0.10	3.5 ±0.05	4.0 ±0.10	2.0 ±0.05	0.75 ±0.10	1.50 +0.1/-0	4.0 ±0.10

Reel :

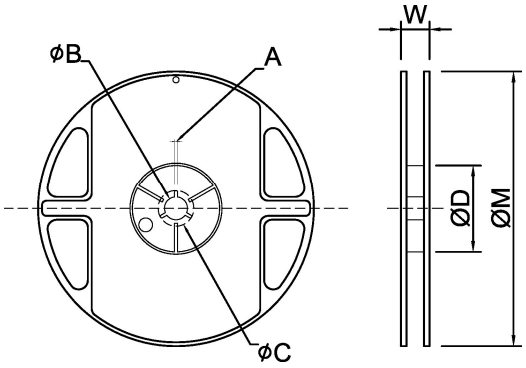

Unit : mm

SIZE		A	B	C	D	W	M
7”	5Kpcs/Reel	2.0 ±0.5	13.5 ±1.0	21 ±1.0	60 ±1.0	11.5 ±2.0	178 ±2.0

Reliability

TEST	PROCEDURE	REQUIREMENTS
Electrical Characterization	Center frequency at 25°C	Fulfill the electrical specification
Thermal Shock	1. Preconditioning, 50 +0/-10°C/1 hr, then keep for 24 ± 1 hrs at room temp. 2. Initial measure Spec: refer Initial spec 3. Rapid change of temperature test： -55°C to +125°C; 300 cycles ,15 minutes at Lower category temperature; 15 minutes at Upper categ	1. No visible damage 2. Fulfill the electrical specification
Temperature Cycling	1. Initial measure Spec: refer Initial spec 2. 1000 Cycles (-55°C to +125°C),Soak Mode = 1 (2Cycle/hours) 3. Measurement at 24+/-2Hours after test conclusion	1. No visible damage 2. Fulfill the electrical specification
High Temperature Exposure	1. 1.Initial measure Spec: refer Initial spec 2. Unpowered ; 1000hours @ T=+ 150°C 3. Measurement at 24±2 hours after test.	1. No visible damage 2. Fulfill the electrical specification
Solderability	Temperature:235±5°C Dipping time: 3 ±0.5 s	The solder should cover over 75% of the critical area of bottom side.
Low Temperature storage	1. Unpowered ; 1000hours @ T=- 55°C 2. Measurement at 24±2 hours after test.	1. No visible damage 2. Fulfill the electrical specification
Soldering Heat Resistance (RSH)	1. Preheating temperature:150 ±10 °C 2. Preheating time:1~2 min. 3. Solder temperature:260±5°C 4. Dipping time:5 ±0.5 s	No visible damage
Vibration	1. 5g's for 20 min., 12 cycles each of 3 orientations. Test from 10-1000 Hz. 2. Use 8"X5" PCB .031" thick 7 secure points on, one long side and 2 secure points at corners of opposite sides. Parts mounted within 2" from a secure point.	No visible damage
Moisture Resistance	1. 24 hours/cycle and Unpowered. 2. Total 10 cycles.Measurement at 24±2 hours after test conclusion.	1. No visible damage 2. Fulfill the electrical specification
Board Flex (SMD)	1. Mounting method:IR-Reflow. PCB Size (L:100 × W:40 × T:1.6mm) 2. Apply the load in direction of the arrow until bending reaches 2 mm.	No visible damage
Adhesion	Force of 1.8Kg for 60 seconds.	1. Magnification of 20X or greater may be employed for inspection of the mechanical integrity of the device body terminals and body/terminal junction.

Revision

•	Setp. 2015	Ver.01	New Issued
•	Oct. 2015	Ver.02	Matching Value Modification