Antenna Acknowledgement

Shantou Weisheng Electronic Technology Co., Ltd

Company address：No. 35 Qigou, Pengnan Industrial Zone, Pengzhong Village, Waisha Street, Longhu District, Shantou City

Hanyi Item No：5G-284mm-VS201

Specification Description：5G-VS201, line length L: 284mm

Customer Name：

Customer Item Number：

Factory signature：

Write	Examine	Approval

Customer Acknowledgement Signature：

Check	Examine	Approval

Content

1、Cover.....1

2、Content.....2

3、Product Picture.....3

4、Specification.....4

5、Test Equipment & Conditions.....5-6

6、Radiation Report.....7-8

7、Reliability Report.....9-10

3 Product Picture

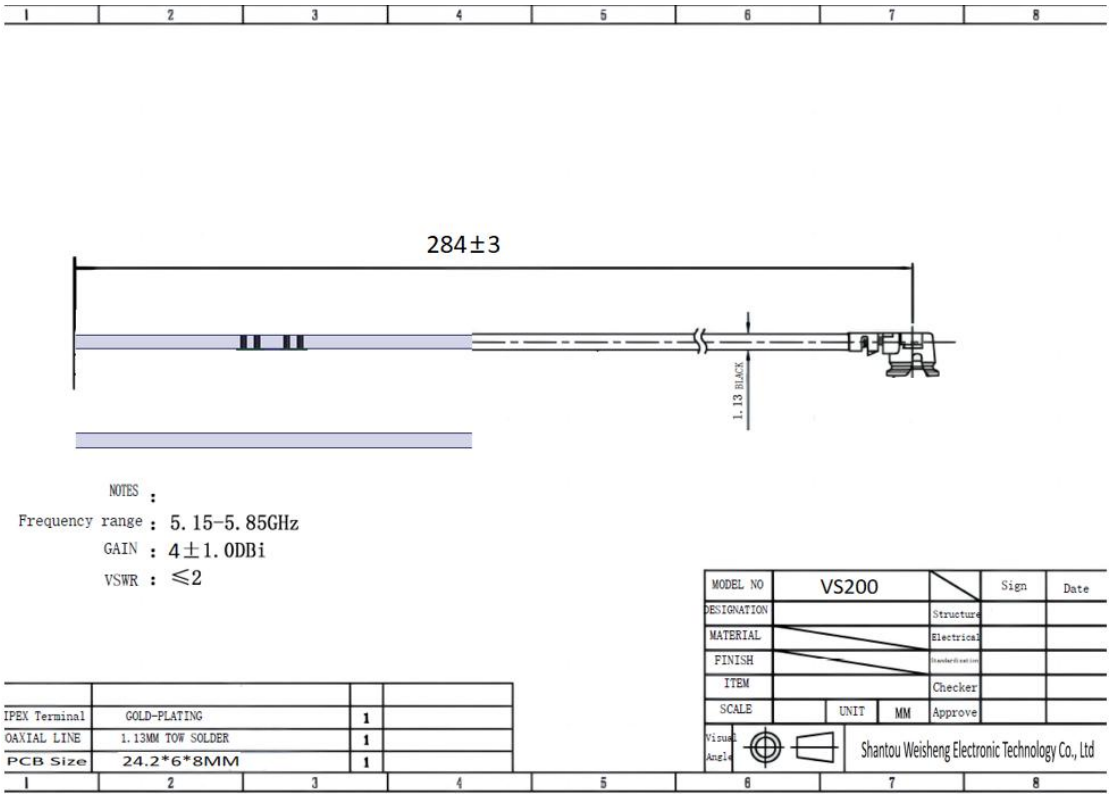

4 Specification)

Parameter	
Frequency	5150-5850MHz
Impedance	50Ω
VSWR	≤2
Connector	Generation 1 terminal
Gain	≥3.7dBi
Mechanical Parameter	
Length	284±3mm
Cable	/
Salt Spray Test	24H
Environment Parameter	
Operation Temperature	-20℃~65℃
Storage Temperature	-30℃~75℃

5 Test Equipment & Conditions

5.1 VSWR Test

5.1.1 Test equipment

Agilent5071C Network Analyzer.

5.1.2 Test system

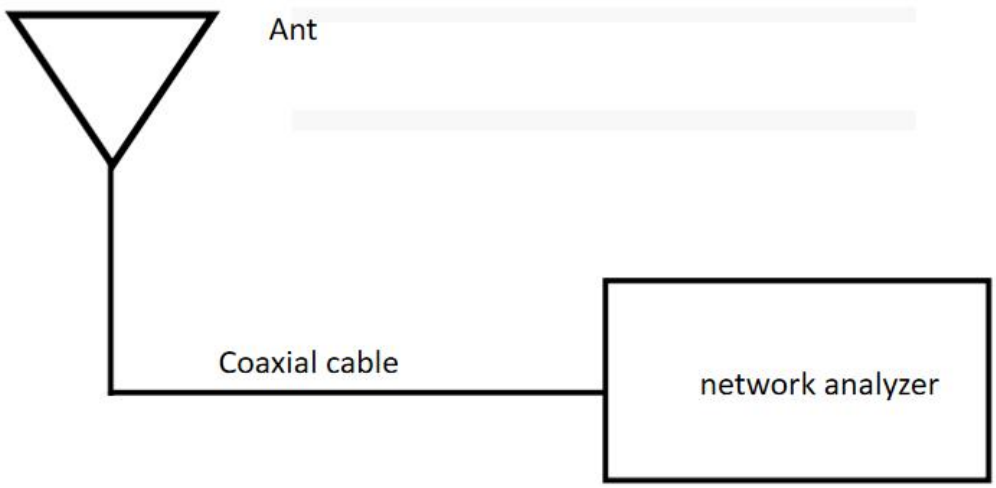

Antenna standing wave test equipment is connected in sequence: Agilent 5071C network analyzer → test cable → antenna.

5.2 Radiation Pattern test

5.2.1 3D Chamber Test System

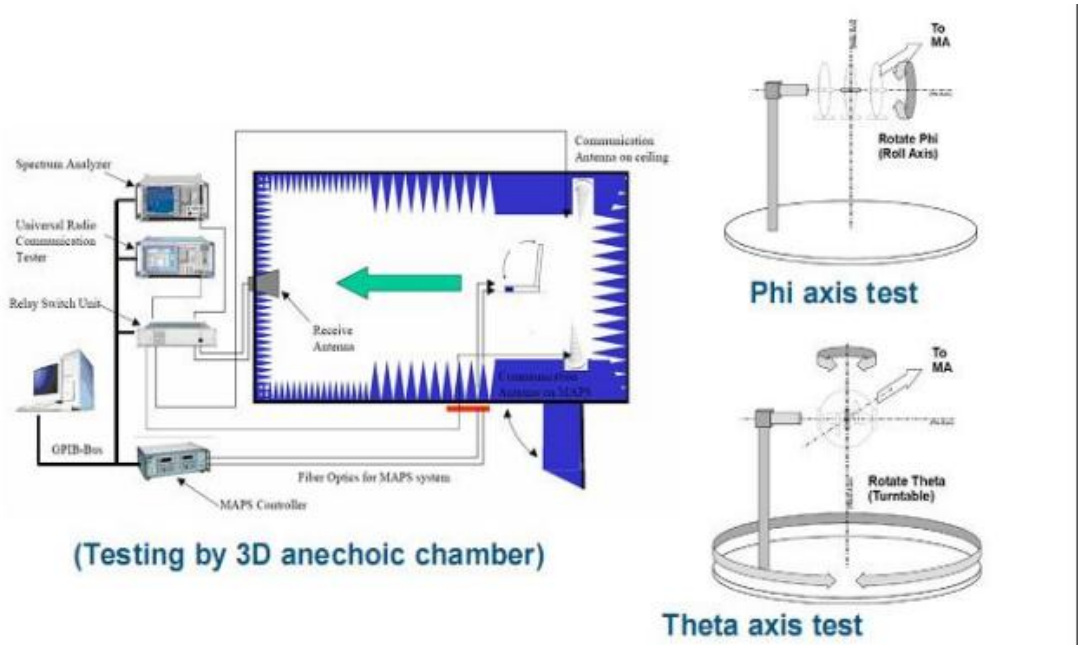

5.2.2 Radiation Pattern test environment

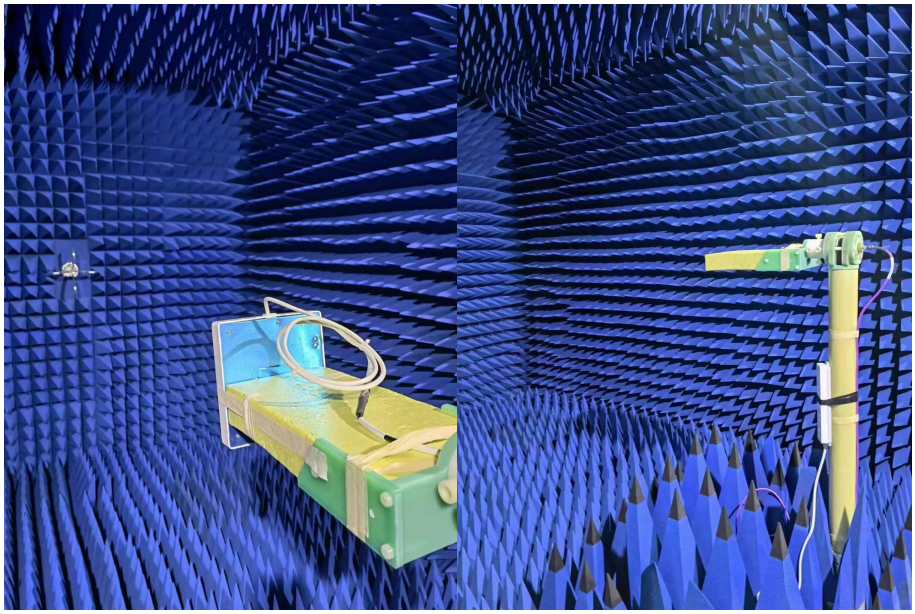

LR microwave anechoic chamber: The test frequency range is 400MHz to 6GHz, and in a spherical quiet zone with a diameter of 40cm, the anechoic chamber provides a reflectivity of less than - 90dB in the range of 400MHz to 6GHz.

6.Radiation Report

6.1 VSWR

6.1.1 VSWR Test waveform

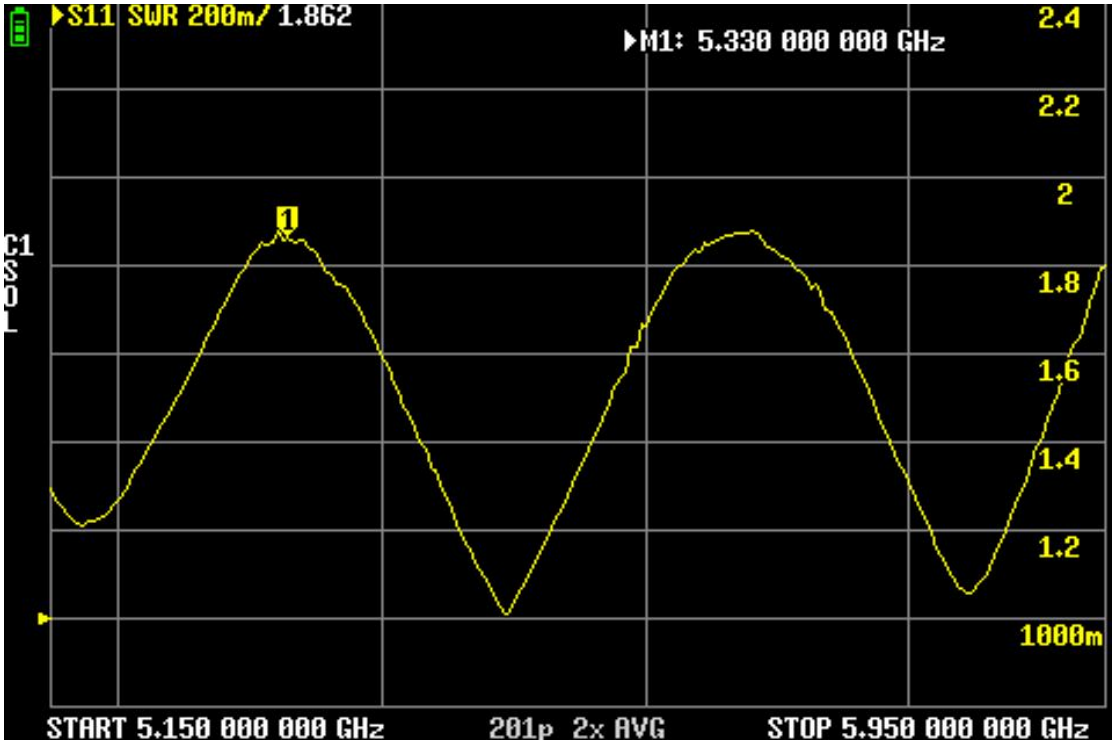

6.1.2 VSWR test result

Frequency	5150-5850MHz
VSWR	≤2

6.2 Radiation Pattern

6.2.1 Radiation Pattern

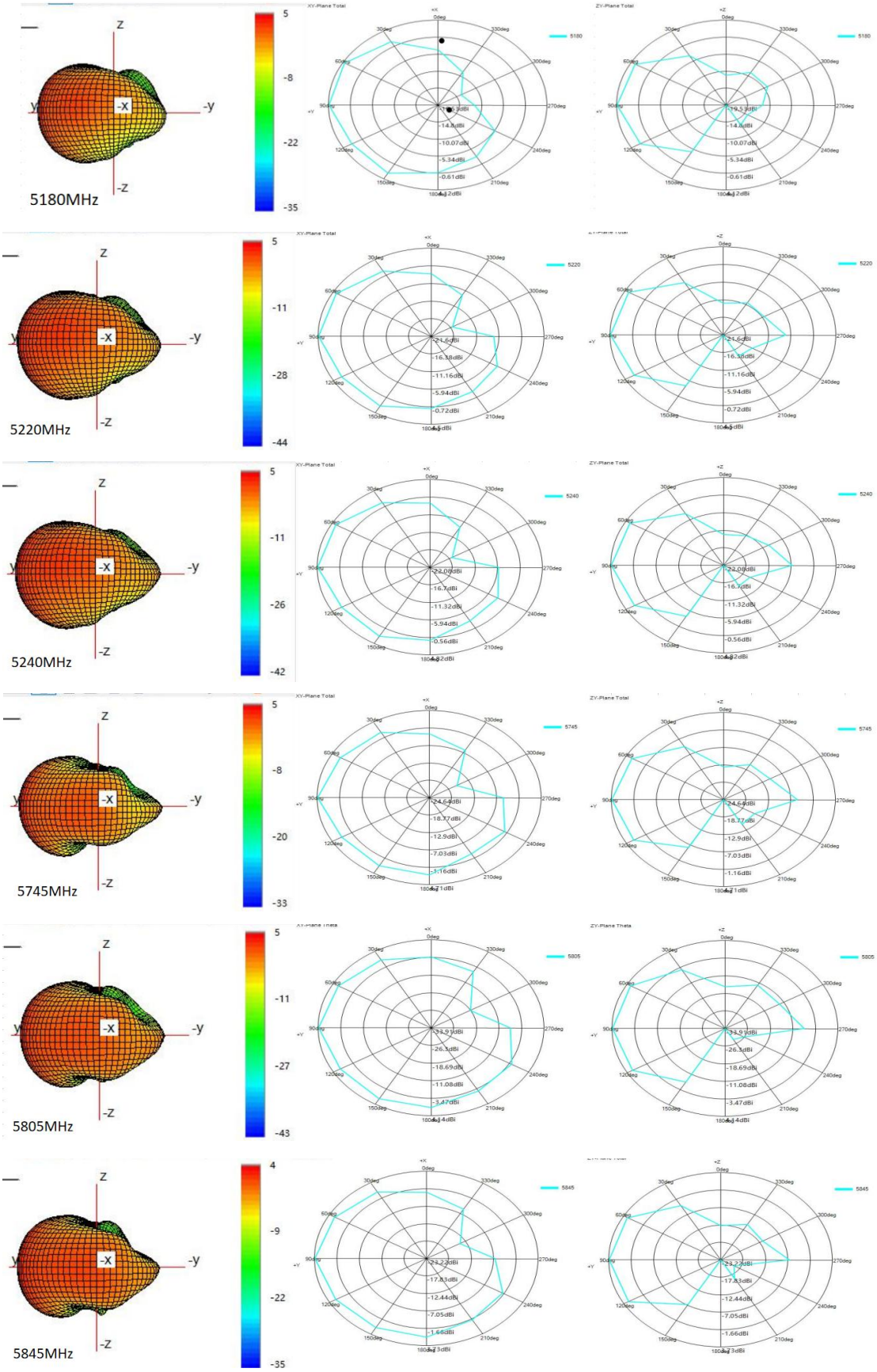

6.2.2 Radiation Pattern test result

Frequency MHz	Gain dBi	Effi %
5180	4.12	60.05
5220	4.50	63.71
5240	4.82	66.64
5745	4.71	59.73
5805	4.17	56.65
5845	3.73	57.45

7 Reliability Report

7.1 Constant Temperature and Humidity Test

Project	Constant Temperature and Humidity Test	Check ID
Product Name	VS200	quantity:5PCS
Date Of Test: 2023-10-24		Date of Complete: 2023-10-25

Equipment For Test

1. Programmable Constant Temperature And Humidity Test Box.
2. 8753ES Network Analyser.

Condition For Test

1. Under room temperature,65% humidity.
2. Under 80° ,85%~90% humidity ,2 hour per circulation, total 24 hours.

Test Result

Standard

1、Shedding-free, Non-cracking, No separation on the surface of metal ;Non-fading, Non-cracking, Non-deforming on the surface of nonmetal.

2、Test result meet the technical requirements.

Project	Before Test	After Test	Problem	Result
Appearance	shedding-free, Non-cracking, No separation	Non-fading, Non-cracking, Non-deforming	Void	Pass
performance	VSWR Pass	VSWR Pass	Void	Pass

Result: ■ PASS FAIL Unable to judge

Tested by: Liu Jie Reviewed by: Li Fei Approved by: Zhang Yunchun

7.2 Salt Spray Test

Project	Salt Spray Test	Test ID
Project Name	VS200	quantity: 5PCS
Date of test: 2023-10-26		Date of complete:2023-10-28

Test equipment:
1. HL-60-SS Salt Spray Test Tester.

Test Condition:
1. 35±2℃ in the salt spray test box; 22~30℃ in the laboratory
2. PH=6.5/7.2, the concentration of the sodium chloride decade to 50 ±10g/L after 24 hours on per 80 square centimeter.

Result: Pass

Number	(Result	Problem
1	Pass	Void
2	Pass	Void
3	Pass	Void
4	Pass	Void
5	Pass	Void

Result: ■ PASS FAIL Unable to judge

Tested by: Liu Jie Reviewed by: Li Fei Approved by: Zhang Yunchun