14+AGES

Control Screen Version

GPS 4-AXIS AEROCRAFT INSTRUCTION MANUAL

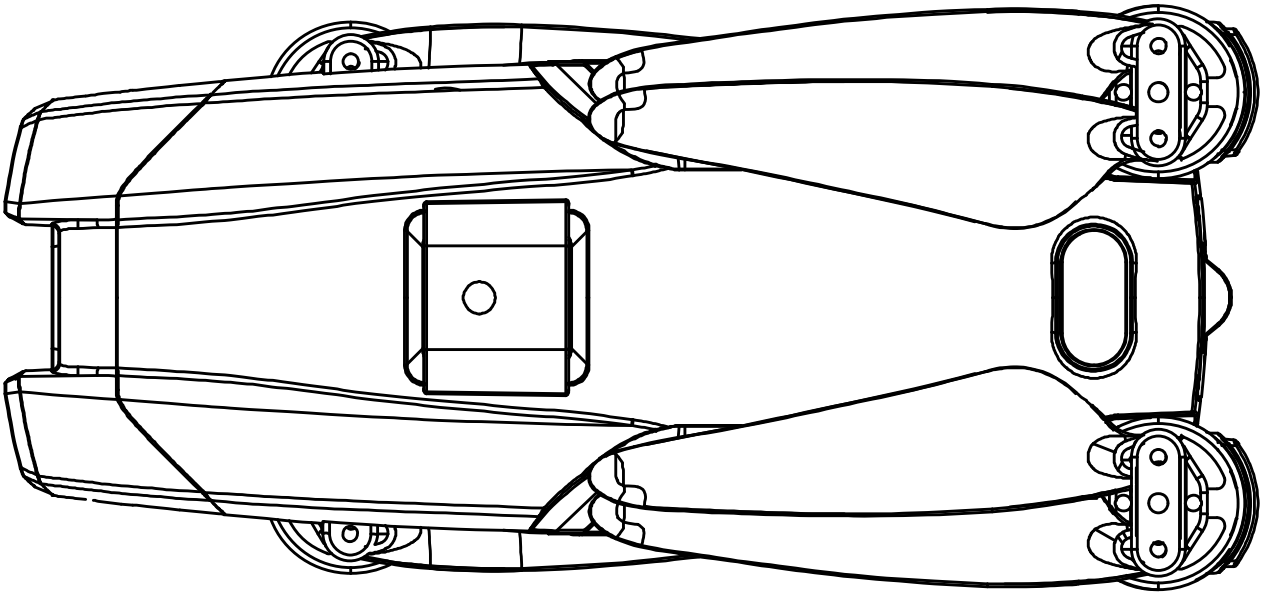

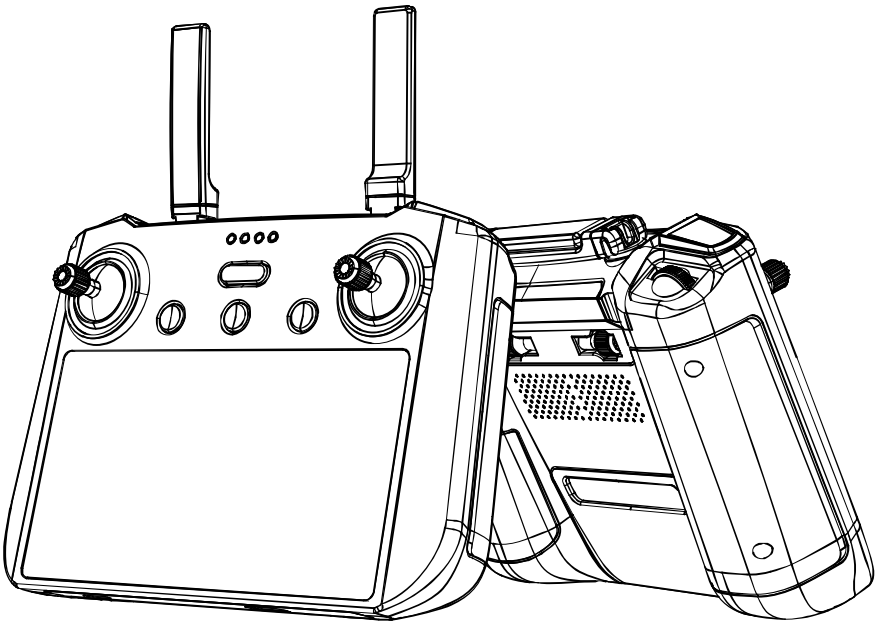

Before using, please read the instruction manual in its entirety
(note that for some sections of learning, please read in detail).
Keep this instruction manual for future reference.

⚠ Prohibition Notice

To ensure the requirements of the electromagnetic environment of the aeronautical radio station, it is prohibited to use all kinds of model remote controllers and drones within a range of 10 kilometers on each side of the centerline of the airport runway, as well as within 20 kilometers at each end of the runway and civil aviation air routes. During the period when the relevant national authorities issue radio control orders, the use of model remote controllers and drones should be stopped as required.

Disclaimer and Safety Information

To make it more convenient and secure for you to use this product, please carefully read all the contents of this manual before using the product and keep this manual for future reference.

Disclaimer

1. To protect the legitimate rights and interests of users, please carefully read the instructions, disclaimers, and safety notices provided with this product before use.
2. This product is not suitable for individuals under the age of 14. Individuals aged 14 and under must use it under the supervision and guidance of an adult with or without drone flying experience.
3. By starting to use this product, you are deemed to have read, understood, acknowledged, and accepted all the terms and content of the instructions, disclaimers, and safety notices of this product.
4. During the use of this product, please strictly comply with and implement the requirements including but not limited to those in the instructions and safety notices. For any personal injury, accidents, property damage, legal disputes, and any other adverse events causing conflicts of interests due to violation of safety notice instructions or unforeseeable factors during use, users are responsible for related liabilities and losses, and the company will not assume any responsibility.
5. The company will not be liable for any actions directly or indirectly resulting from the use of this product that violate legal regulations.

Safety Instructions

1. This product is not suitable for individuals under the age of 14 and others who do not have full capacity for civil conduct.
2. This product features high-speed rotating propellers and powerful flight power, which poses certain risks during operation. Please do not approach or touch the product while it is running.
3. When using this product, please stay away from dangerous environments such as airports, railways, highways, high-rise buildings, and power lines.
4. When using this product, please stay away from environments with high electromagnetic interference such as mobile phone base stations and high-power transmission equipment.
5. When using this product, please stay away from all manned aircraft.
6. Do not use this product in harsh environments such as rain, thunderstorms, sandstorms, fog, snow, strong winds, low temperatures, etc.
7. This product is not waterproof. Do not operate this product near water bodies.
8. When operating this product, always maintain a safe distance of about 10 meters between the drone and people or animals.
9. Always keep the drone within the operator's line of sight during flight.
10. Do not hover or fly the product over crowds, and do not use it to scare others.
11. Do not operate this product near children's play areas.
12. Do not use this product to chase or interfere with the normal operation of vehicles.
13. In non-emergency situations, do not turn off the motors while the product is flying.
14. Do not use this product under the influence of alcohol, fatigue, medication, physical discomfort, etc.
15. Before each use, inspect the product for components' firmness, cracks and wear on the body and propellers, battery level, effectiveness of indicators, etc. If any abnormalities are found, stop using it immediately and replace the corresponding parts.
16. An unmanned aircraft with abnormal operation may cause accidents. Do not start the propellers or fly in a forced manner.
17. Do not attempt to stop any moving parts of the product during operation.
18. Do not modify the product or use it for purposes other than its original design.
19. Do not operate this product in no-fly zones specified by laws and regulations.

20. Due to the variety of materials used in aircraft, high temperatures can damage the internal structure of drones and lead to unpredictable consequences. Therefore, please keep drone equipment away from heat sources and avoid prolonged exposure to direct sunlight.
21. Please operate according to the product manual.
22. Please use original factory accessories for maintenance and replacement.
23. When lending to other personnel for operation, please ensure that the operators understand and comply with this safety notice.
24. Do not mix different types of batteries.
25. Do not use batteries that are swollen, leaking, or damaged.
26. Do not charge the battery near flammable materials (such as blankets, solid wood furniture, and boards, etc.).
27. Please use the original factory configured charging cable for charging, do not use other brands or damaged charging cables for charging.
28. Keep a safe distance from high-speed rotating propellers to avoid the risk of cutting or slashing injuries.
29. Do not use the model close to the ears! Misuse may cause hearing damage.
30. Use the aircraft in a place as far away as possible from other electrical devices and magnetic objects, as they may interfere with each other.
31. Do not short-circuit or crush the battery to avoid explosions.
32. The motor is a heating component, do not touch it to avoid the risk of burns.

Charging Precautions

1. All batteries carry certain risks that may cause unnecessary harm to people and property, so please use them carefully.
2. In case of battery leakage, avoid contact with the liquid on your skin and eyes. If it comes in contact with your skin, wash immediately with soap and water. If it gets into your eyes, rinse with plenty of water and seek medical attention immediately.
3. If the charger emits an unusual smell, noise, or smoke, unplug it immediately.

Charging Instructions

1. Please use the original charging cable to charge, do not use damaged or other brands of chargers.
2. Do not charge batteries that are swollen, leaking, or damaged.
3. Do not overcharge the battery. Once the battery is fully charged, unplug the charger.
4. Do not charge near flammable materials (carpets, wooden floors, solid wood furniture, etc.) or conductive surfaces. Keep the battery within sight during charging.
5. Do not charge immediately after the battery dissipates heat after use. Wait 10-15 minutes for the battery to cool down.
6. The temperature for battery charging should be between 0°C to 40°C.

Recycling

This device is composed of electronic components and batteries. Regarding electronic waste, please handle it properly according to local waste disposal requirements.

Product Introduction

Aircraft Introduction

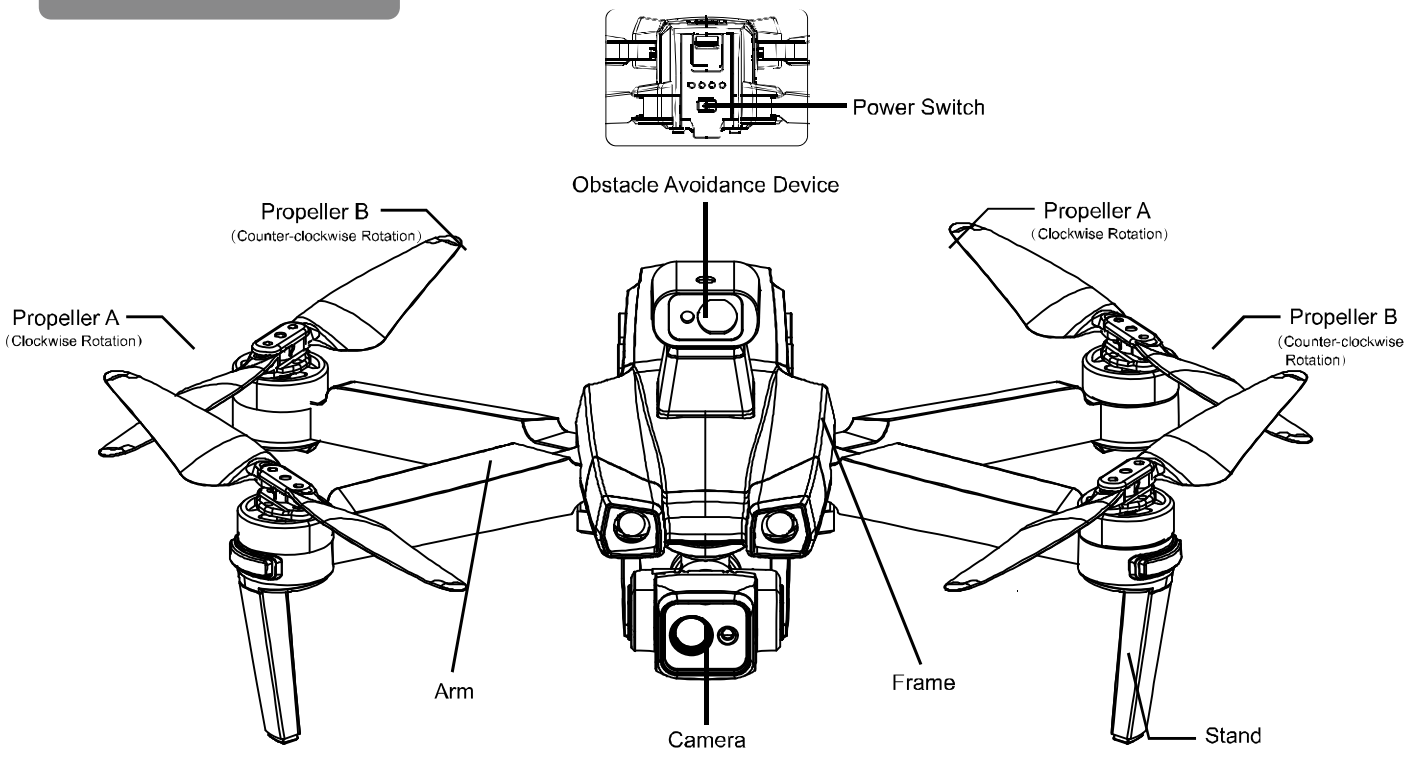

Note

When replacing the blades, ensure that each axis is installed with blade A/B consistently.

Note: Images are for reference only, please refer to the actual product.

Remote Control Introduction

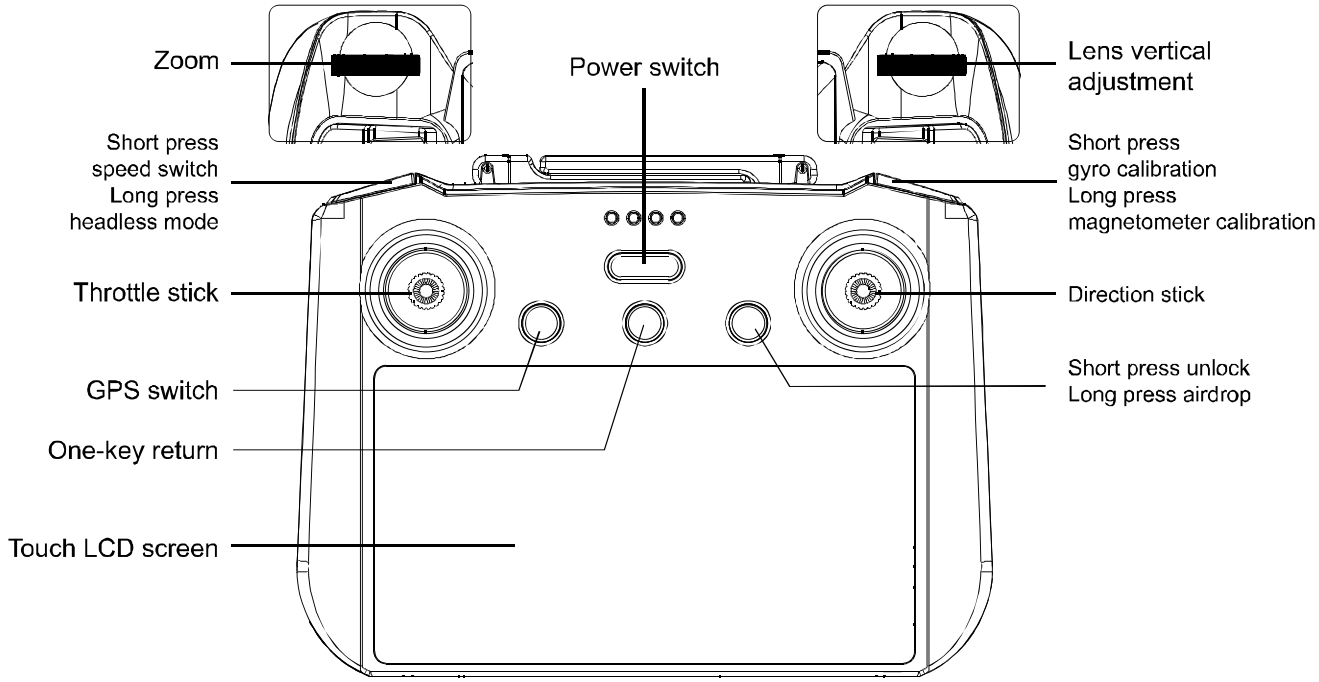

Low Battery Reminder: When the remote control's power drops below 7V, it will emit a "beep" low battery reminder sound, at which point the user needs to charge it promptly.

Obstacle Avoidance Component Installation Guide

Obstacle avoidance function

Obstacle avoidance technology, as a guarantee to increase the safety of drone flights, has been advancing rapidly with technological discoveries. During the flight process, drones collect information about the surrounding environment through their sensors, measure distances, and then make corresponding action commands to achieve the function of "obstacle avoidance."

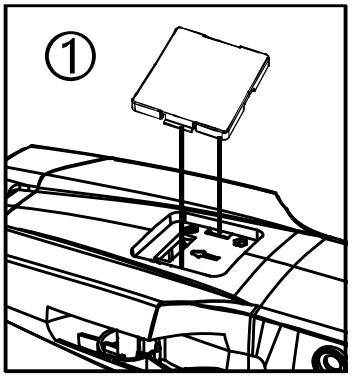

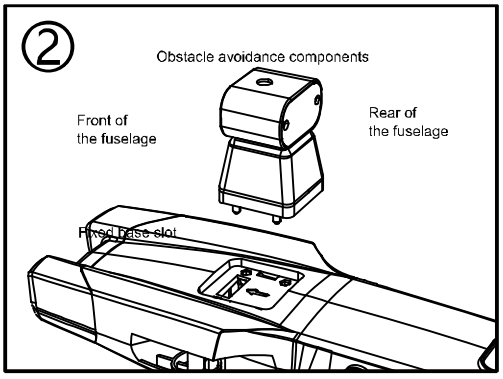

Assembly diagram

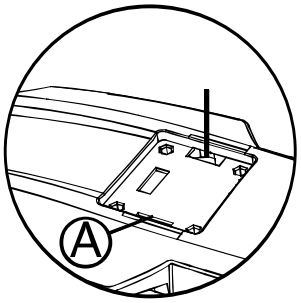

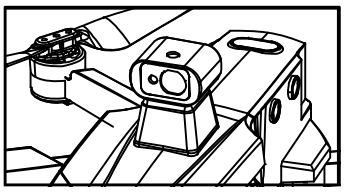

Assembly completion diagram

Installation of obstacle avoidance components

1. Insert the signal plug wire (4PIN) of the obstacle avoidance head component into the left side Ⓐ seat of the body, making sure it is not inserted in the wrong direction;
2. Insert the steering plug wire (5PIN) of the obstacle avoidance head component into the right side Ⓑ seat of the base slot, making sure it is not inserted in the wrong direction;
3. Insert the component into the buckle inside the main body of the machine;
4. The obstacle avoidance device needs to work with the direction rod to operate the obstacle avoidance.

⚠ Note:

1. The obstacle avoidance system must be installed before powering on the aircraft, otherwise the obstacle avoidance function will be ineffective.
2. The obstacle avoidance function does not work when the aircraft is circling.
3. The obstacle avoidance function does not work when the aircraft is low on battery.
4. The obstacle avoidance function does not work when the aircraft is returning.

Charging and Battery Installation

Aircraft Charging Instructions

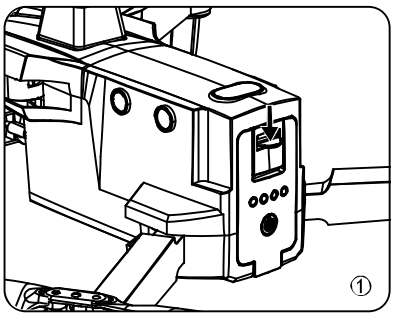

1. Hold the handle and pull out the battery. (Refer to Figure 1)

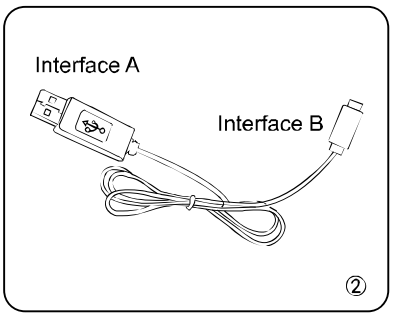

2. Connect the dedicated charging cable for charging. (Refer to Figure 2)

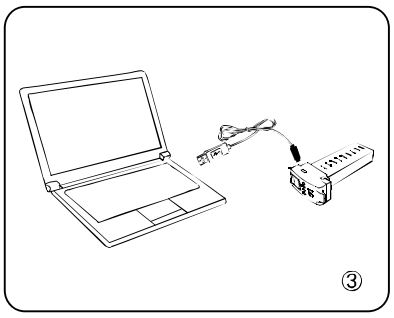

3. Insert the power adapter. (Refer to Figure 3)

As shown in the above figure, after disconnecting, connect Interface A to the computer's USB port. When the smart battery is plugged in, one light will be on; when charging, the smart battery light will flash. When fully charged, all four lights will be on continuously. Charging time is approximately 300-350 minutes.

Remote Control Charging Instructions

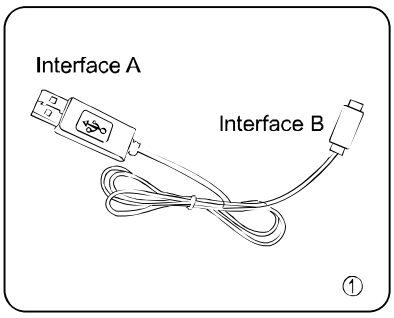

1. Connect the dedicated charging cable for charging. (Refer to Figure 1)

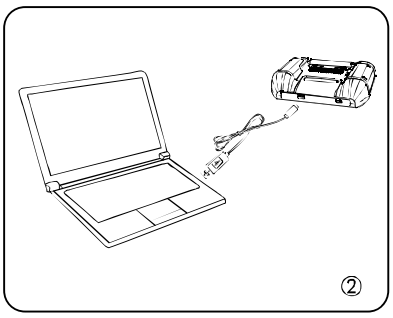

2. Insert the power adapter. (Refer to Figure 2)

As shown in the above picture, after disconnecting, interface A is connected to the computer's USB port or a mobile phone charger. At this time, the remote control's LCD screen will light up and flash, and the light will go off when the remote control is fully charged; the charging time is approximately 240-300 minutes.

Function Introduction

Joystick Introduction

1. Left (Throttle) Joystick

(The left joystick controls the flight's altitude and left-right direction)

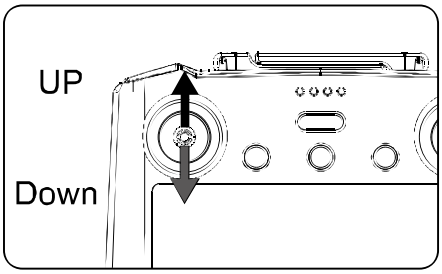

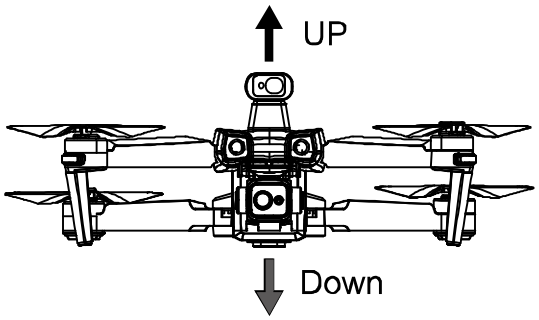

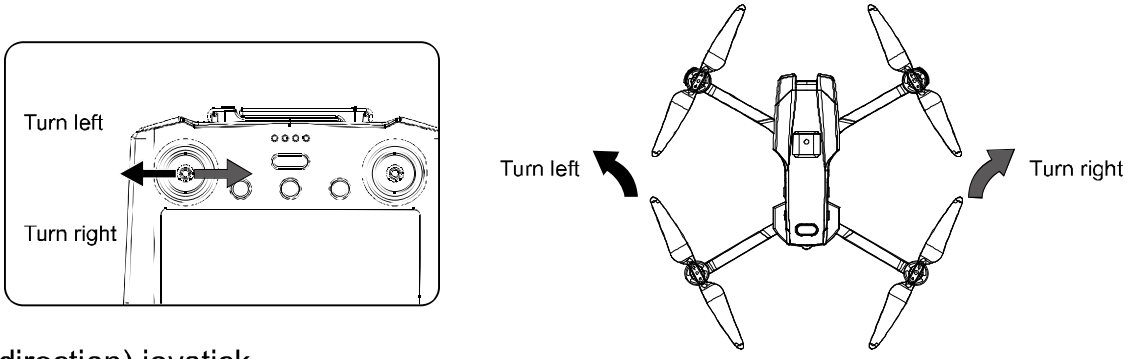

2. Right (direction) joystick

(The right joystick controls forward, backward, and left/right side flight directions)

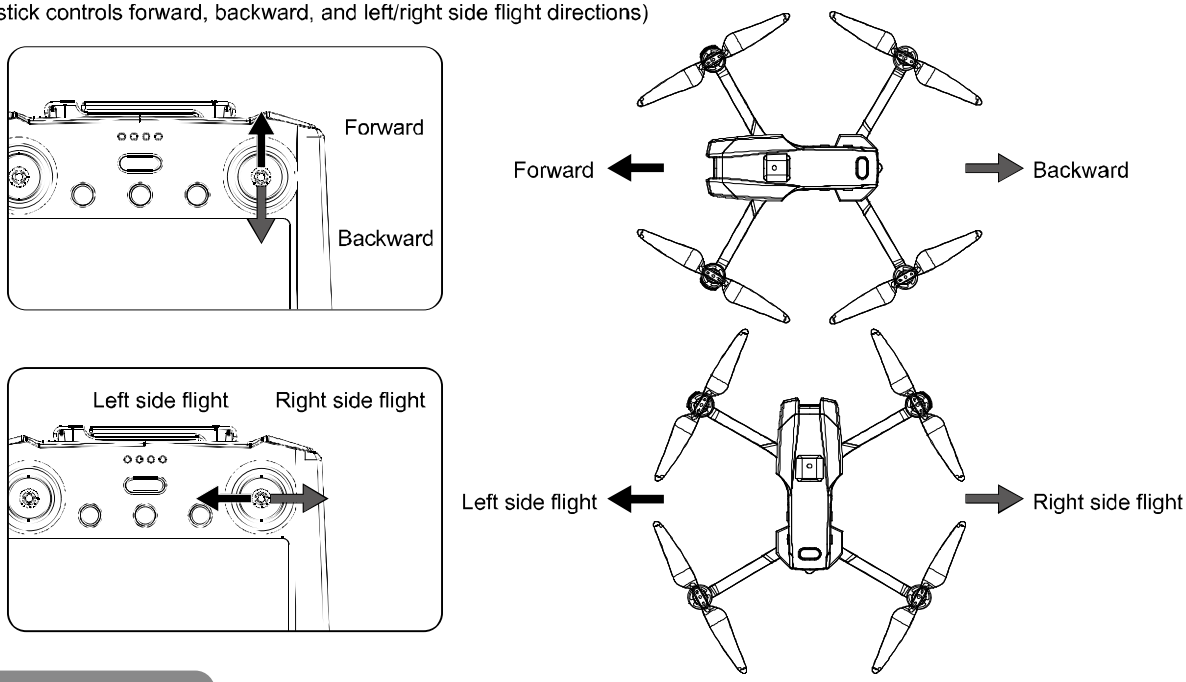

GPS Fix Introduction

1. After successful frequency matching, in open and unobstructed environment it takes 1-3 minutes for the aircraft, with the two front lights steady and the two rear lights flashing slowly. When the two rear lights become steady, it indicates GPS fix success. Press the one-key unlock button at this time, the aircraft propellers will rotate slowly, push the throttle up to take off.
2. If the front and rear lights of the aircraft are flashing alternately, it means the current location is experiencing signal interference and a change of site is needed.
3. Press the GPS button, the remote controller will "beep" twice, entering indoor mode, and the two rear lights of the aircraft will flash slowly.

One-key Return

Three situations of one-click return:

1.Active Return: When one-click return is initiated, the remote controller will continuously emit "beep" sounds, and the aircraft will start returning to the takeoff point for landing. Approximately 10 seconds after the completion of one-key return, the remote controller will automatically stop the alarm sound.

2.Automatic Return: When the aircraft detects low first-level battery power, the rear red light of the aircraft will flash slowly. If the aircraft is flying below 30 meters from the ground, it will automatically ascend to a height of 30 meters from the ground and then return to the takeoff point within a radius of 20 meters and automatically descend to a height of approximately 20 meters from the ground.

3.Forced Return: When the second-level low battery power is detected and the aircraft is below 30 meters from the ground, the aircraft will forcefully ascend to a height of 30 meters from the ground, then return to the airspace above the takeoff point and automatically land on the ground, stopping flight. (Note: During the forced return process, the remote controller cannot control the aircraft.)

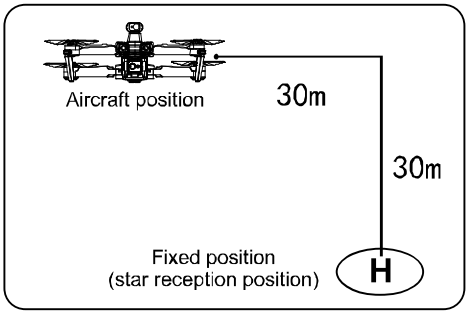

Speed

Press the high and low-speed switch button on the remote control to control the flight speed.

(One "beep" for medium speed, two "beeps" for fast speed. Default setting is slow speed when turned on).

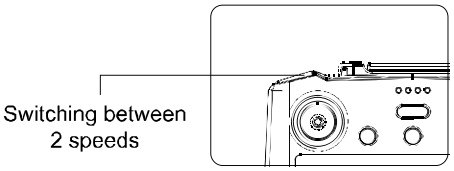

Camera gimbal adjustment

1. During flight, slide the camera gimbal control wheel on the remote control to the left to adjust the camera angle upwards.

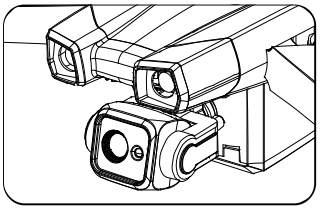

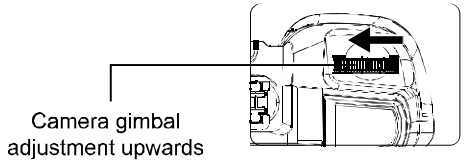

2. During flight, slide the camera gimbal control wheel on the remote control to the right to adjust the camera angle downwards.

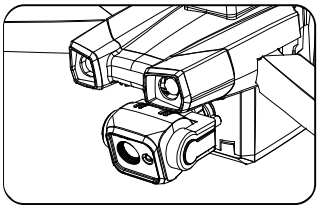

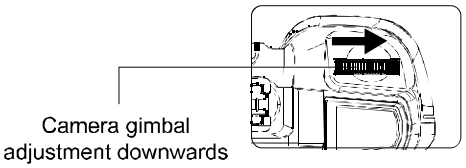

Note: After turning on the frequency, the camera will automatically calibrate. Remember not to manually adjust the camera!

Headless Mode

1. When the headless mode button on the remote control is long-pressed, one end of the remote control antenna points forward in the direction of heading, and the remote control emits a "beep" sound, indicating that the headless mode is activated.

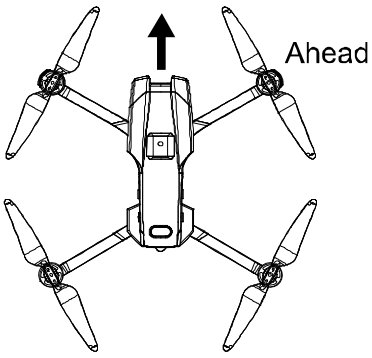

2. To exit the headless mode, long-press the headless mode button again, and the remote control will emit a "beep" sound to indicate exiting the headless mode.

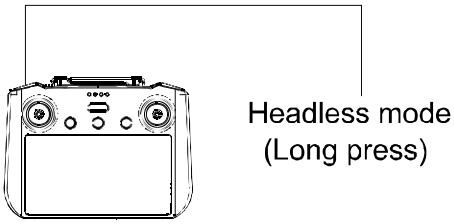

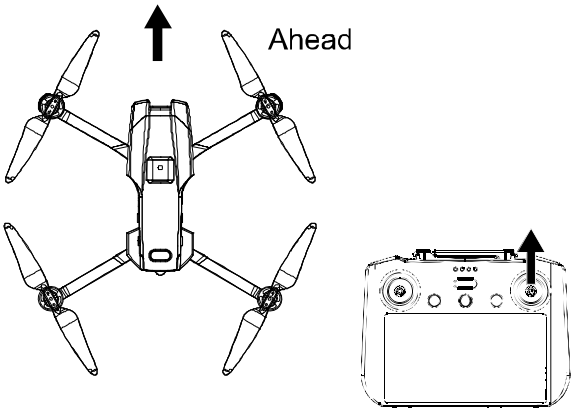

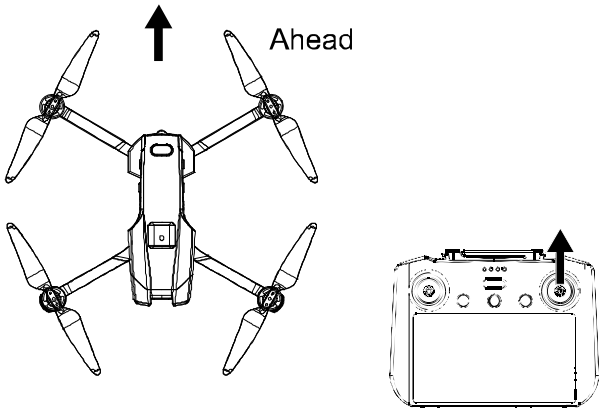

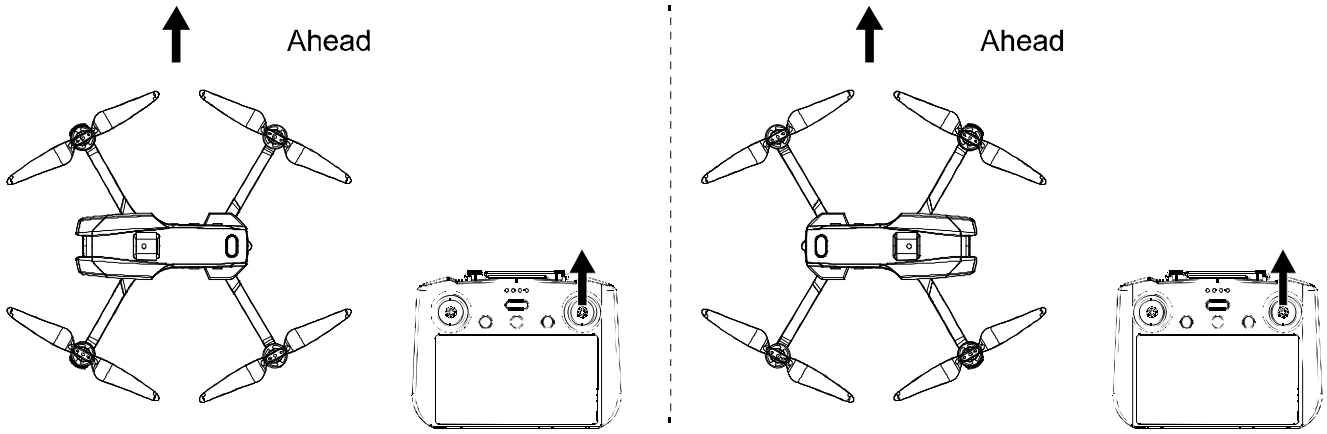

Safety Flight Guidelines

It is recommended to fly under the following conditions:

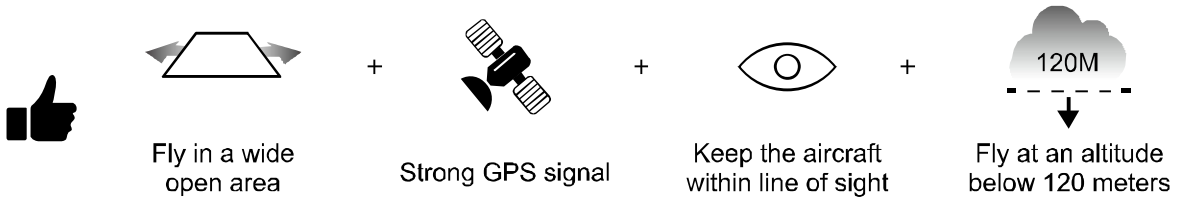

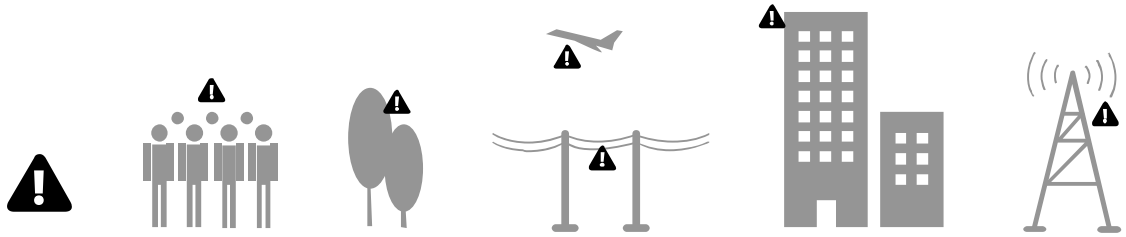

It is recommended to avoid flying over or near crowds, trees, high-voltage power lines, buildings, airports or water bodies, as well as high-intensity power sources or base stations, as it may affect the compass on the aircraft.

Do not operate this product in adverse weather conditions such as rain, snow, fog, and wind speeds exceeding 10m/s or 22mph.

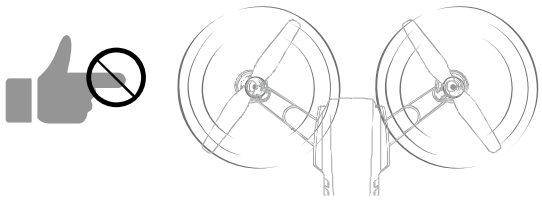

Stay away from rotating propellers and motors.

Prohibited to fly in areas where flying is not allowed.

Understanding the safety guidelines is crucial for safe flight. Please read the safety guidelines carefully before flying.

Pre-flight Preparation

Frequency Pairing

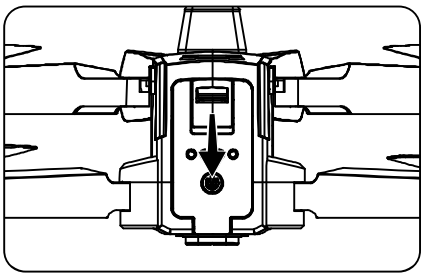

Press the power button briefly, then press and hold the aircraft switch for about 3 seconds after releasing it, the lights will rapidly flash for 3 seconds.

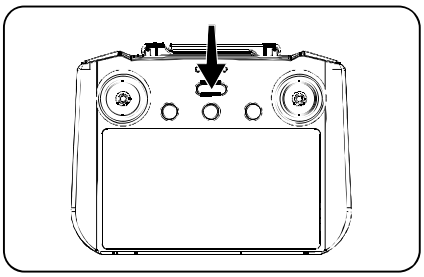

Turn on the remote controller power switch, hear two "beeps," at this time, the remote controller power indicator stays on, the front light of the aircraft stays on, and the rear light flashes slowly, indicating successful frequency pairing. After successful pairing, open the app interface, and connect successfully.

Calibrate the Magnetometer

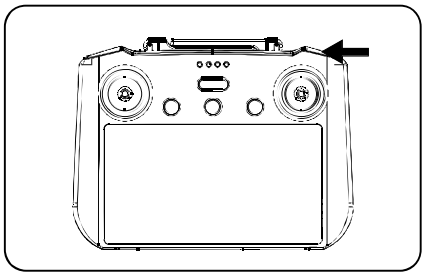

Long press the one-key magnetometer calibration button, the remote controller beeps once, and the front and rear lights flash quickly.

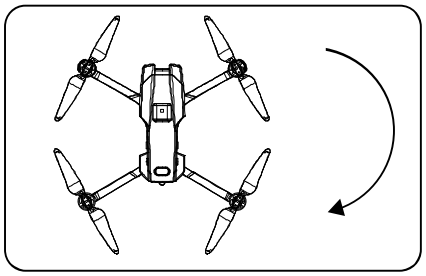

Hold the aircraft horizontally and rotate it clockwise until the remote controller beeps once, the front light of the aircraft flashes quickly, and the rear light stays on.

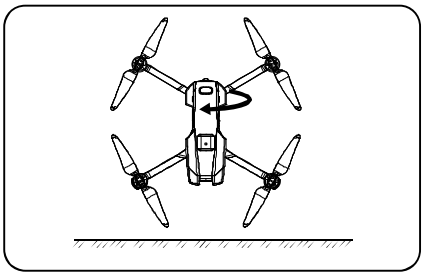

Rotate the aircraft with the camera facing down clockwise until the remote controller beeps once, the front light of the aircraft stays on, the rear light flashes slowly, indicating successful magnetometer calibration.

Calibrate the Gyroscope

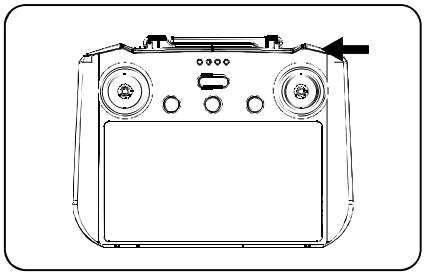

Press the one-key gyroscope calibration button briefly, the remote controller beeps once, the front and rear lights change from quick flashing to the front light staying on and the rear light flashing slowly, indicating successful gyroscope calibration.

Unlock

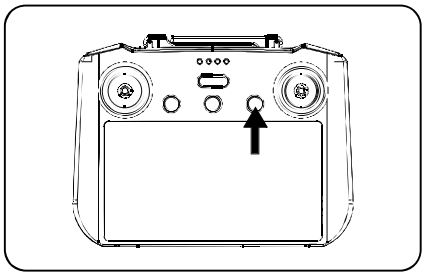

After the aircraft has completed satellite positioning, the rear LED light of the aircraft changes from slow blinking to staying on, short press the unlock button to unlock the propellers, long press for the drop function.

Special Reminder:

This product can be equipped with a airdrop configuration, with a airdrop weight of 300 to 500 grams, for carrying flight within an open and uninhabited field of view. Any damage accidents caused by overloading without authorization are not related to the factory!

Components Diagram

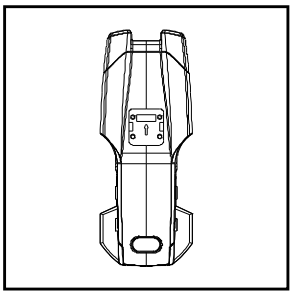

01. Nose cone

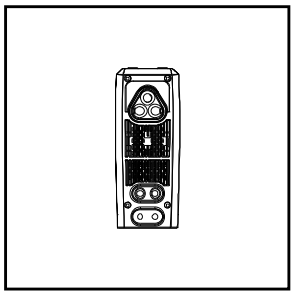

02. Bottom cover

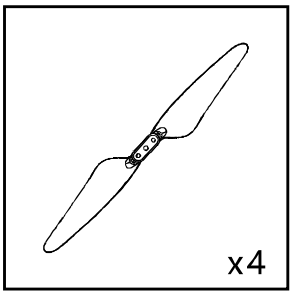

03. Propeller

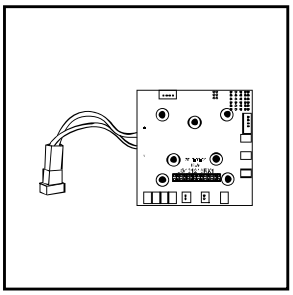

04. Receiver board

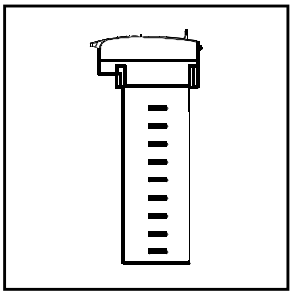

05. Lithium battery

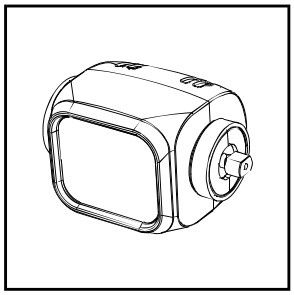

06. Camera

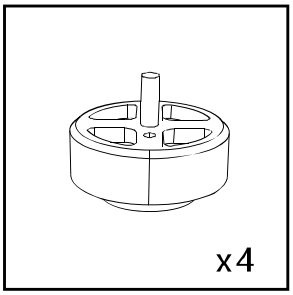

07. Brushless motor

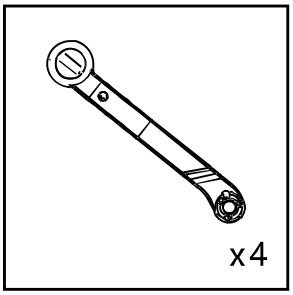

08. Shaft

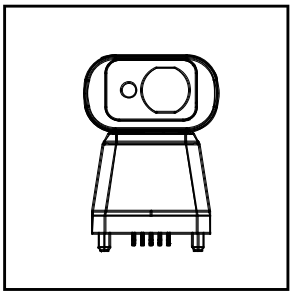

09. Obstacle avoidance sensor

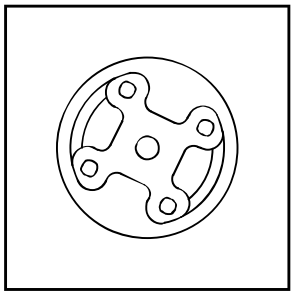

10. Motor cover

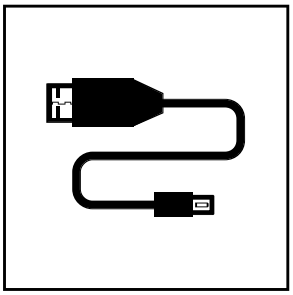

11. USB charging cable

DRONE

XL FLY

APP User Manual

User Guide

- Beginner's Guide
- Instruction
- Control Interface

1. Introduction to the Control Interface
2. Explanation of Control Interface Functions
3. Gesture Recognition Function

Connect the remote control

Turn on the remote control, switch on the aircraft power, wait for 1-2 minutes, the remote control LED light flashes slowly;At this time, waiting for the aircraft to synchronize frequencies, once synchronized, the remote control LED stays on.

Friendly Reminder

Only one mobile APP is allowed to connect to an aircraft at the same time!

Note: When the aircraft is in the following environments, the downward optical flow positioning hover effect is poor, which will cause the aircraft to have difficulty flying smoothly, resulting in body shaking.

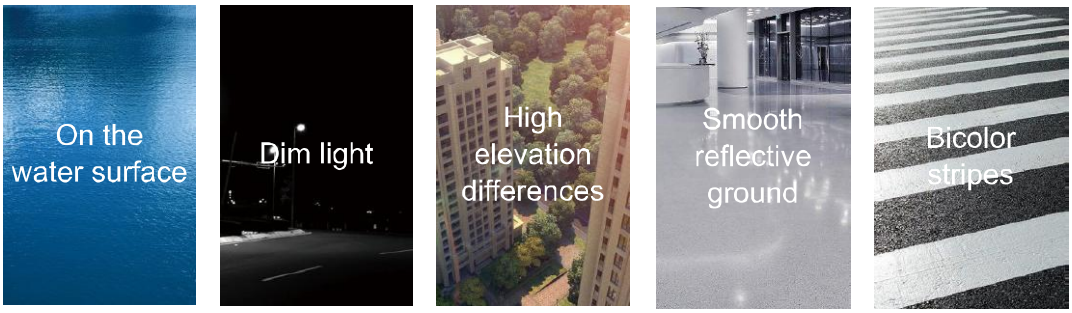

Beginner's Guide

Guidance Instructions

Click on the right Enter the guidance instructions interface

Instruction Guide

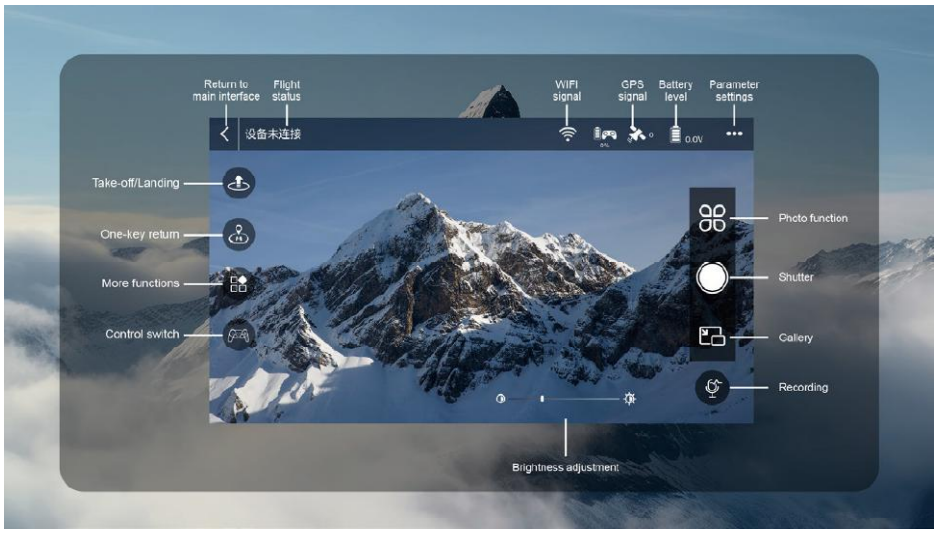

Guide Summary 2

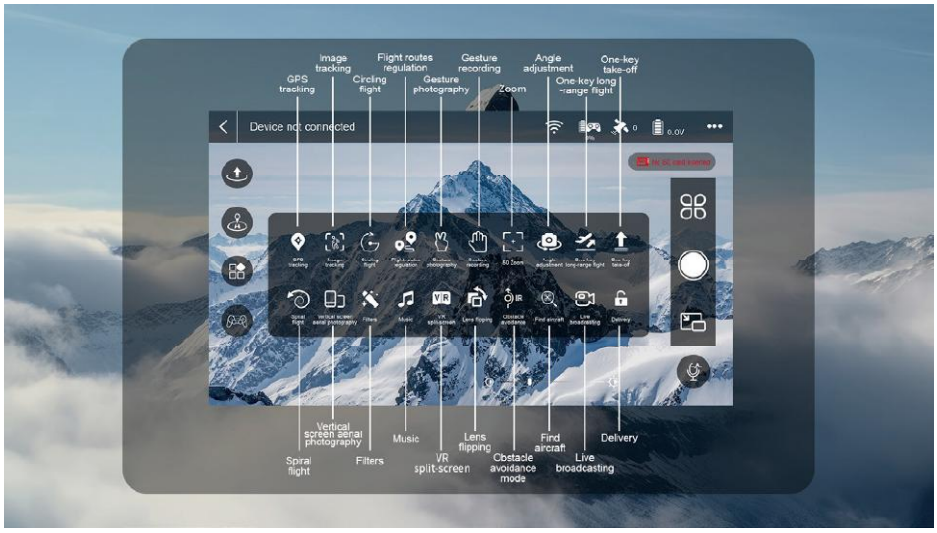

App Usage Notes

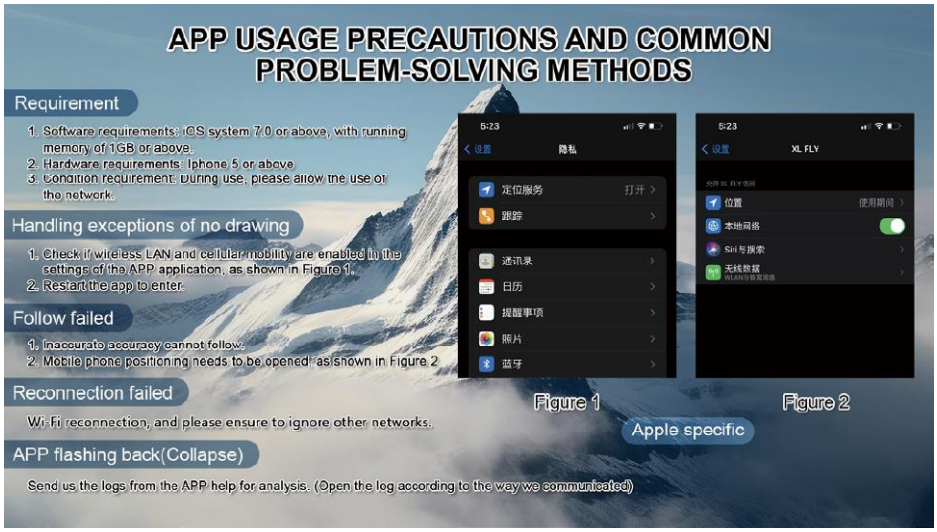

1.1 Control Interface Overview

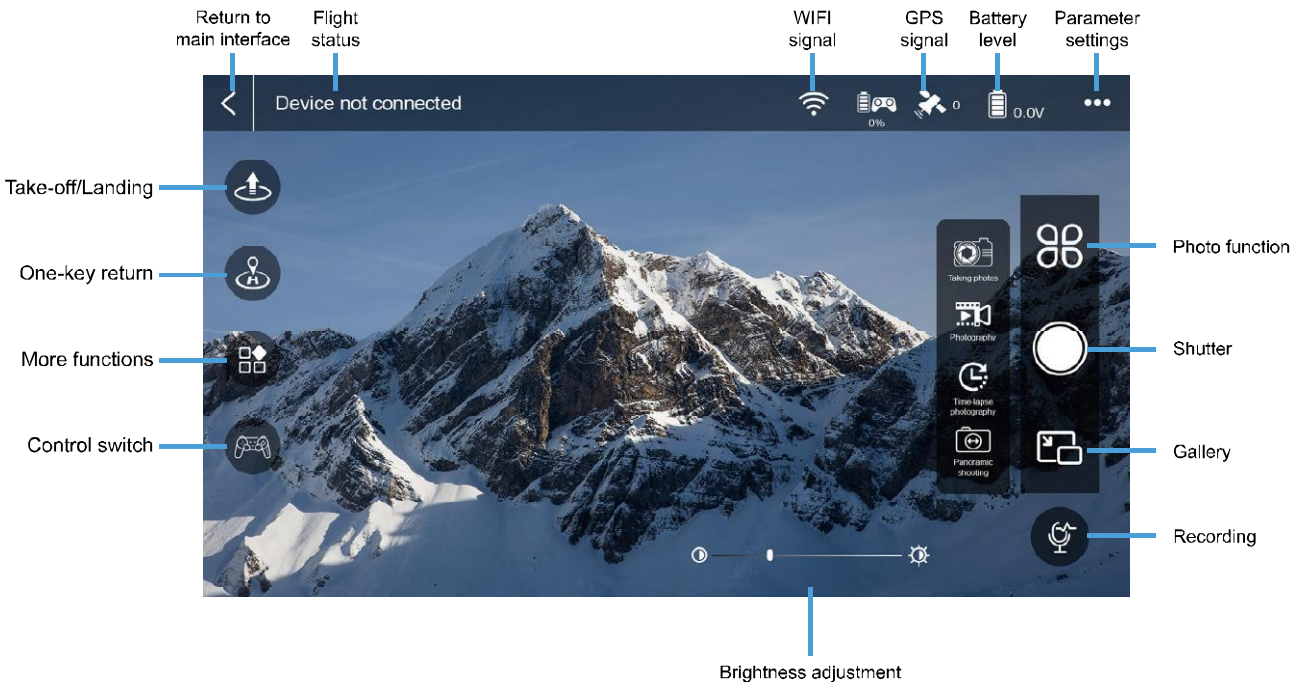

1.2.1 Control Interface Function Description

Return to main interface: Return to the main interface of the APP.

Flight status: Indicates the flight status.

WIFI Signal: Indicates the signal of WIFI connection.

GPS Signal: Indicates the current flight mode and the number of satellites: Flashing indicates the current optical flow fixed point mode, without return, follow, orbit, and point-to-fly functions.Constantly on indicates the current GPS mode. Indicates the height, distance, and corresponding latitude and longitude of the current aircraft from the return point.

Battery Level: The battery status of the aircraft.
(1) 2-4 bars indicate normal battery level, in GPS mode, return, follow, orbit, and point-to-fly functions can be operated normally.
(2) 1 bar indicates the aircraft is in low battery status, the aircraft will execute automatic return function; there are no follow, orbit, and point-to-fly functions in low battery status.

Parameter Settings: Open or close the parameter settings dialog.

1.2.2 Operation Interface Function Description

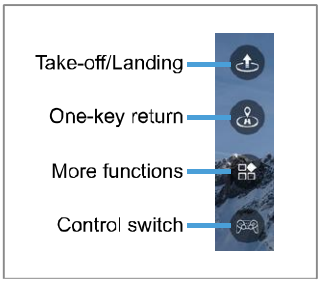

Take-off/Landing: Click after unlocking to achieve one-click takeoff or one-click landing.

One-key return : In GPS mode, click to achieve One-key return.

More Functions: Click to open more functions.

Control Switch: Click to switch between phone control or remote control.

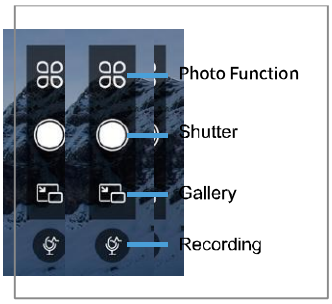

Photo Function: Click the button to select the photo function, video recording function, time-lapse shooting, or panoramic shooting.

Shutter: Click the button to start or stop taking photos or recording videos.

Gallery: Click the button to view the captured content.

1.2.3 Operation Interface Function Description

GPS Follow: In GPS mode, click this button and the aircraft will follow the phone's flight.

Image Follow: In optical flow mode, click this button and a blue target box will appear on the screen.

Circle Flight: In GPS mode, set any point on the map, and the aircraft will circle around the location obtained on the map.

Route Planning: In GPS mode, the aircraft will fly according to the selected route on the map.

Gesture Photo: Click the button, face the camera front lens, make a palm gesture, and trigger the aircraft's automatic photo function.

Gesture Video: Click the button, face the camera front lens, make an OK gesture, and trigger the aircraft's automatic video recording function.

50x Zoom: When turned on, adjust the zoom factor of the lens view by adjusting the slider on the right side. After zooming in, sliding your finger on the screen can move the visible range of the view.

Lens Adjustment: Adjust the angle of the lens servo.

One-Key Far Fly: When turned on, the aircraft will move away from the target diagonally and retreat about 25 meters. Pay attention to the space behind to avoid causing damage!

One-Key Skyward: When turned on, the aircraft will automatically ascend about 15 meters. Be cautious of obstacles above to avoid causing damage!

In case of an emergency, immediately interrupt the flight with the remote control!

1.2.4 Operation Interface Function Description

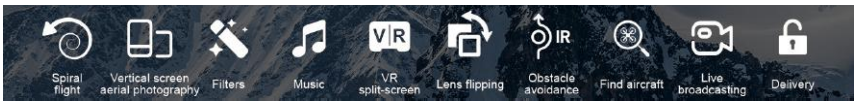

Spiral Flight: When opened, the aircraft will automatically spiral upwards (up to a maximum radius of about 15 meters). Pay attention to the surrounding environment to avoid causing harm!

Vertical Photo Mode: When opened, you can switch to vertical photo mode.

Special Effects: When opened, you can adjust your favorite filters as needed.

Music Addition: When opened, add music. When recording a video, you can simultaneously add background music.

VR Split-Screen: When opened, enter or exit VR function.

Reverse Camera: When opened, reverse the camera.

Obstacle Avoidance: When opened, it will automatically avoid obstacles.

Find Aircraft: When opened, activate the aircraft locating function to pinpoint the specific location where the aircraft has fallen or gone missing.

Live Streaming: When opened, you can activate live streaming function.

Airdrop: Press to unlock the drone's latch and drop the items you need to release.

In case of an emergency, immediately interrupt the flight with the remote control!

1.2.4 Operation Interface Function Description

Joystick:

The left joystick controls the aircraft to go up, down, turn left, and turn right;
The right joystick controls the aircraft to go forward, backward, left, and right.

Share

Click on the left side of the screen in the control page After clicking the button, enter the album interface. When clicking to view photos or videos, users can do so through the upper right corner Share photos or videos to major social media platforms.

1.3 Gesture Recognition

Facing the front lens of the camera, the following gestures can be triggered to trigger the automatic camera orcamera function of the aircraft:

Take Photos by Gestures About 2m in front of the camera of the aircraft, hold the ges-ture with one hand flat. After the aircraft successfully recognized the gesture,the countdown of 3 sec-onds began to take photos;

Shoot Videos by Gestures About 2 meters in front of the aircraft lens, After the aircraft has successfully recognized the gesture,the video will start. When the gesture isrecognized again, end the recording (the time difference between two recogni- tion should bemore than 3 seconds);

* Special Instructions

To ensure that the lens gets a higher recognition rate :

1.Please aim the lens face to face;

2.Please fly in a good light environment;

3.Please conduct gesture recognition operation at a distance of about 2m from the lens.

In the following cases,it will result in a low lens recognition rate :

1.Weak light or backlight;

2.The WiFi signal is weak or the signal is disturbed.

FCC Warning

This device complies with part 15 of the FCC Rules. Operation is subject to the following two conditions: (1) This device may not cause harmful interference, and (2) this device must accept any interference received, including interference that may cause undesired operation.

Any Changes or modifications not expressly approved by the party responsible for compliance could void the user's authority to operate the equipment.

Note: This equipment has been tested and found to comply with the limits for a Class B digital device, pursuant to part 15 of the FCC Rules. These limits are designed to provide reasonable protection against harmful interference in a residential installation. This equipment generates uses and can radiate radio frequency energy and, if not installed and used in accordance with the instructions, may cause harmful interference to radio communications. However, there is no guarantee that interference will not occur in a particular installation. If this equipment does cause harmful interference to radio or television reception, which can be determined by turning the equipment off and on, the user is encouraged to try to correct the interference by one or more of the following measures:

-Reorient or relocate the receiving antenna.

-Increase the separation between the equipment and receiver.

-Connect the equipment into an outlet on a circuit different from that to which the receiver is connected.

-Consult the dealer or an experienced radio/TV technician for help.

The device has been evaluated to meet general RF exposure requirement. The device can be used in portable exposure condition without restriction.