100.00 mm

150.00 mm

# INSTRUCTION MANUAL

## Bluetooth Speaker

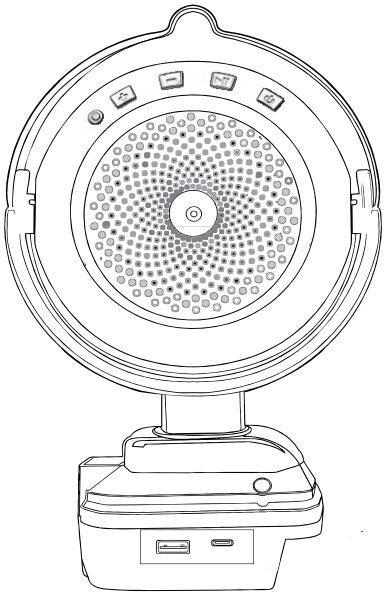

CE RoHS FC

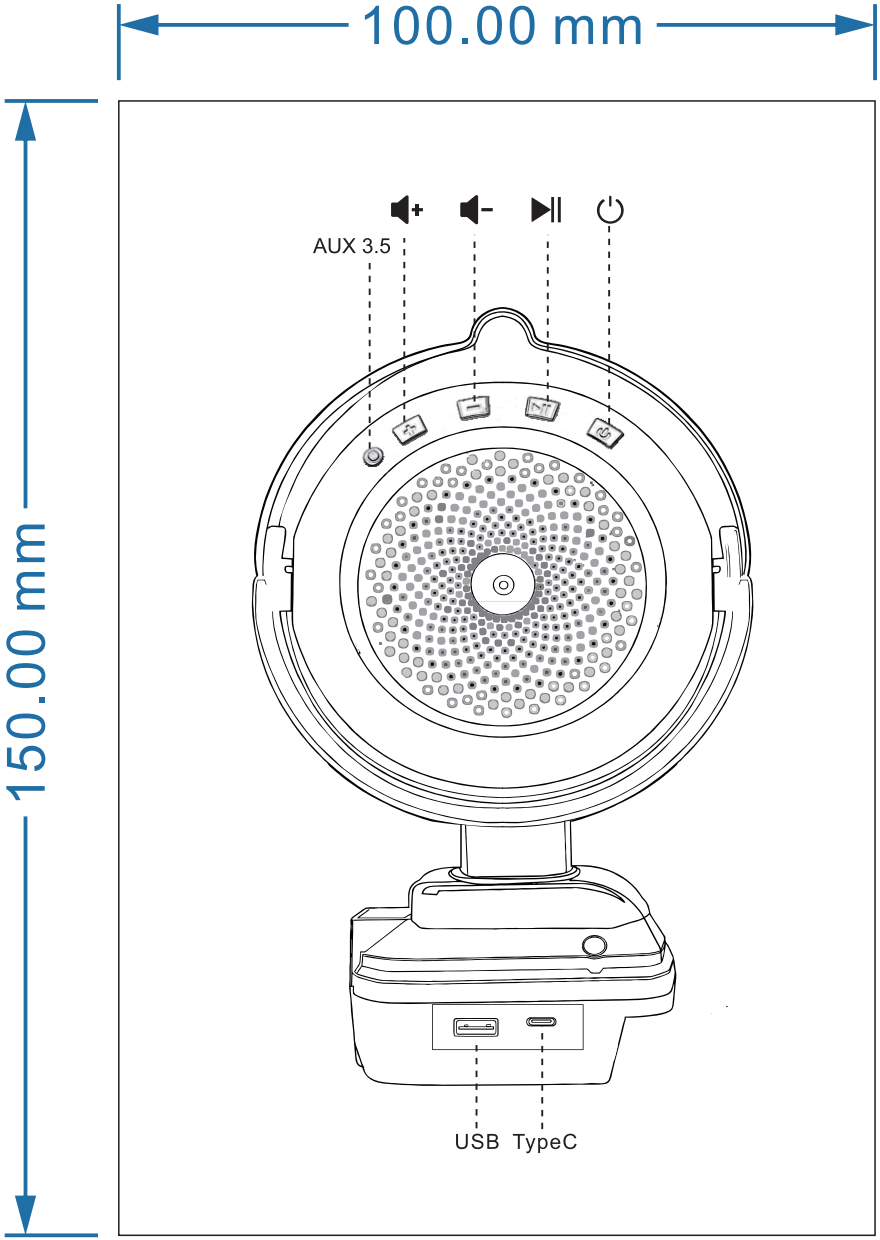
100.00 mm
150.00 mm
AUX 3.5
USB
TypeC

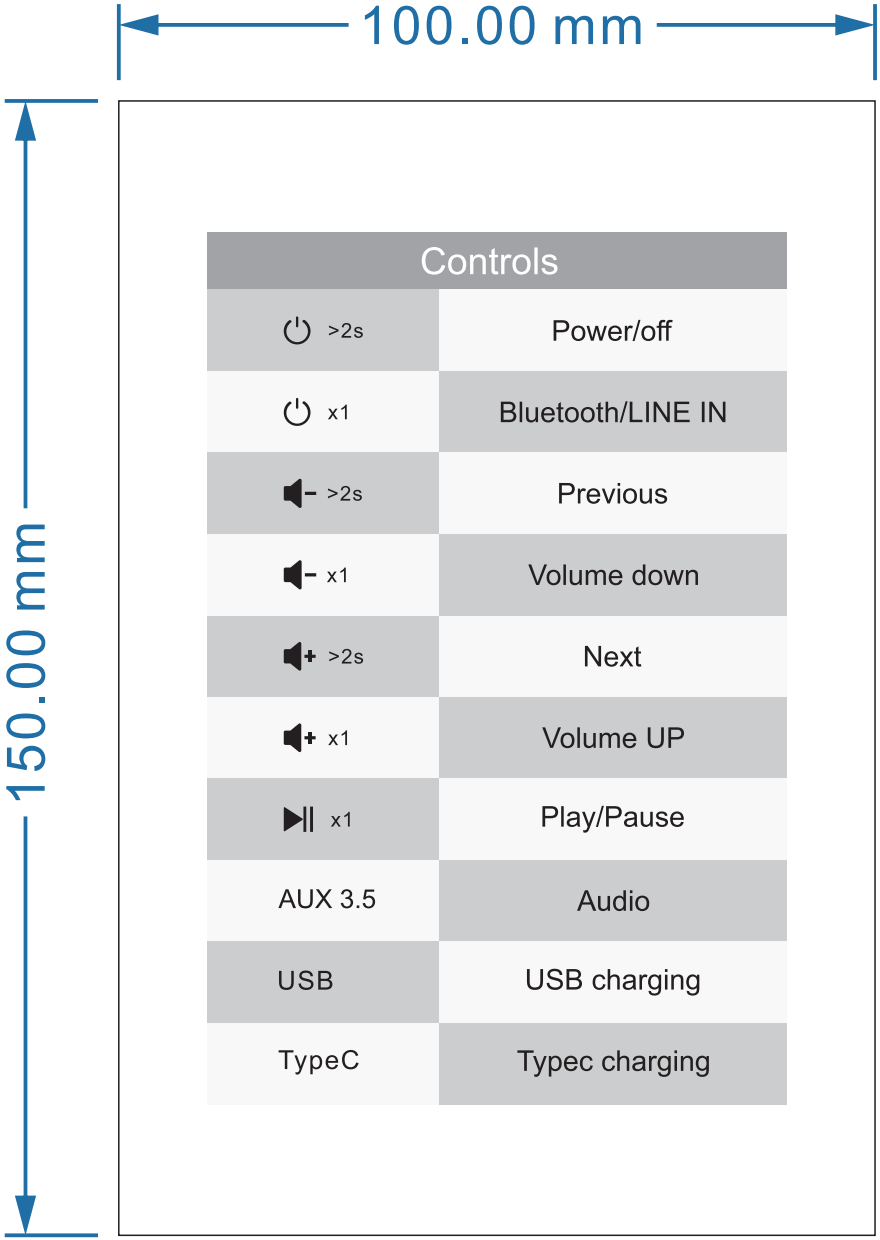


| Controls | |
|---|---|
| >2s | Power/off |
| x1 | Bluetooth/LINE IN |
| >2s | Previous |
| x1 | Volume down |
| >2s | Next |
| x1 | Volume UP |
| x1 | Play/Pause |
| AUX 3.5 | Audio |
| USB | USB charging |
| TypeC | Typec charging |

100.00 mm

150.00 mm

# BLUETOOTH

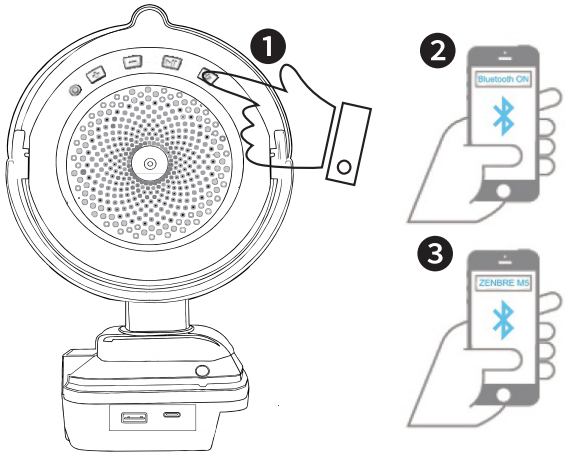


1. Turn on power button, a flashing blue on
2. Turn on the Bluetooth on your device
3. Search and choose QSCD1886 to pair, LED shows steady blue and a "Bluetooth connector"indicates successful pairing.

| | |
|---|---|
| Pairing | Blinking |
| Connected | ON |

100.00 mm

150.00 mm

This is an universal instruction manual for following models

| Model | Color | Compatible with |
|---|---|---|
| QSCD1886 | Red | Milwaukee 18V battery |
| QSCD1886 | Blue | Makita 18V battery |
| QSCD1886 | Yellow | DeWalt 18V battery |
| QSCD1886 | Green | Bosh 18V BAT Series Only |

## TROUBLESHOOTING

Bluetooth not connecting

1. Another device may already be connected. Disconnect the other device first and then try connecting the desired
2. Device Bluetooth is off. Turn on device Bluetooth.
3. Bluetooth speaker is in AUX mode. Remove the AUX cable from the port on the speaker and device.

## SPECIFICATIONS

| | |
|---|---|
| Battery Input: | 18V/20V Li-ion Battery |
| Audio Input: | Bluetooth 5.0 (10m Range) or Ø3.5mm AUX |
| Max. Power: | 8W |
| Product Size: | 6.18in*9.13in*3.26in |
| Product Weight: | 0.45kg |
| USB Output: | 5V/2.1A |
| Type-C Output: | 5-9V/18W(PD 3.0) |
| Operating temperature: | -10 ℃ ~ +40℃ |
| Package Contents: | 1* Bluetooth Speaker/1* AUX 3.5mm Cable |

## ⚠WARNING

The following actions will result in the warranty being void.

If the tool has been operated on a supply voltage other than that specified on the tool.

If the tool shows signs of damage or defects caused by or resulting from abuse, accidents or alterations.

Failure to perform maintenance as set out within the instruction manual.

If the tool is disassembled or tampered with in any way

## FCC Warning

**15.19 Labeling requirements.**

This device complies with part 15 of the FCC Rules. Operation is subject to the following two conditions: (1) This device may not cause harmful interference, and (2) this device must accept any interference received, including interference that may cause undesired operation.

**15.21 Information to user.**

Any Changes or modifications not expressly approved by the party responsible for compliance could void the user's authority to operate the equipment.

**15.105 Information to the user.**

Note: This equipment has been tested and found to comply with the limits for a Class B digital device, pursuant to part 15 of the FCC Rules. These limits are designed to provide reasonable protection against harmful interference in a residential installation. This equipment generates uses and can radiate radio frequency energy and, if not installed and used in accordance with the instructions, may cause harmful interference to radio communications. However, there is no guarantee that interference will not occur in a particular installation. If this equipment does cause harmful interference to radio or television reception, which can be determined by turning the equipment off and on, the user is encouraged to try to correct the interference by one or more of the following measures:

-Reorient or relocate the receiving antenna.

-Increase the separation between the equipment and receiver.

-Connect the equipment into an outlet on a circuit different from that to which the receiver is connected.

-Consult the dealer or an experienced radio/TV technician for help.

**FCC RF Radiation Exposure Statement:**

1.This Transmitter must not be co-located or operating in conjunction with any other antenna or transmitter.

2.This equipment complies with RF radiation exposure limits set forth for an uncontrolled environment.

This equipment should be installed and operated with minimum distance 5mm between the radiator and your body.

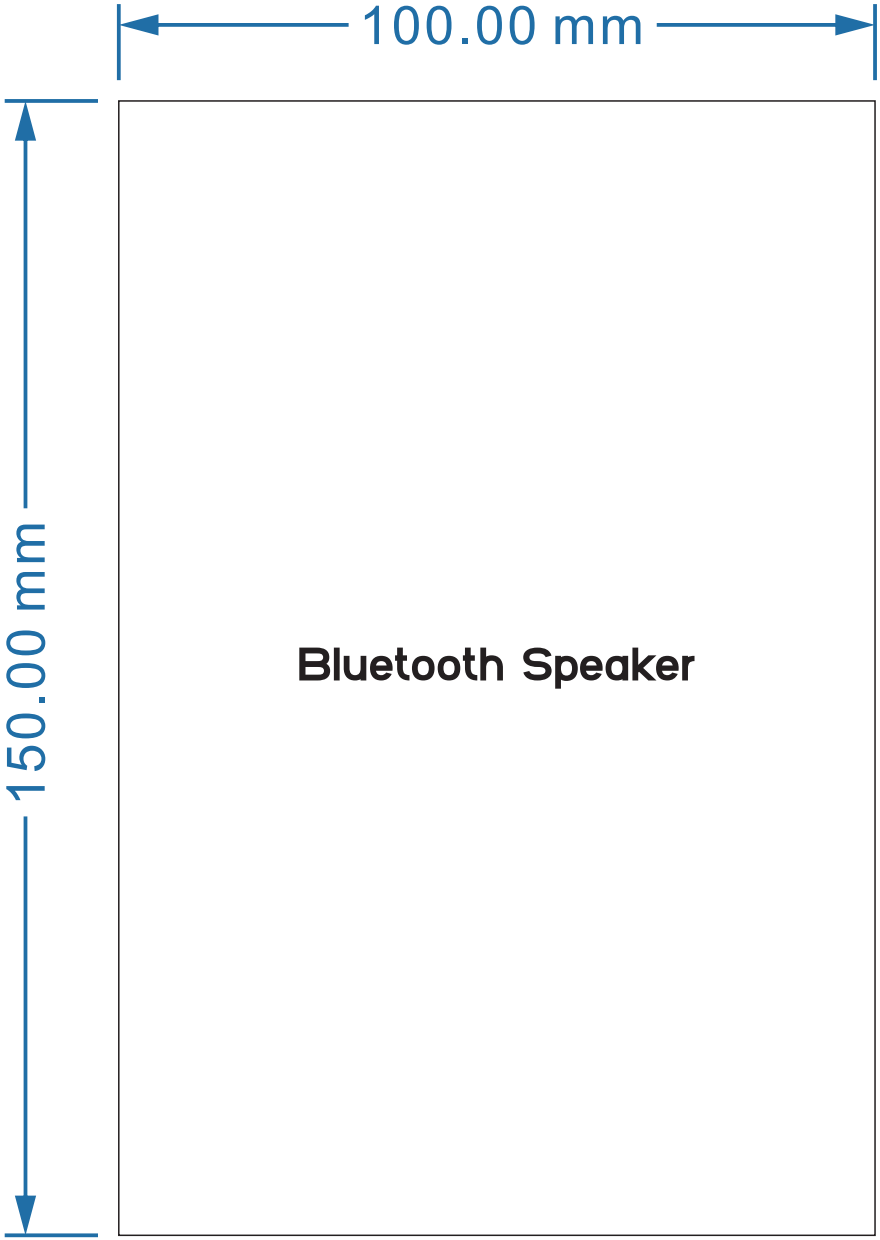
100.00 mm
150.00 mm
Bluetooth Speaker