During the warranty period, the following situations are not covered by the warranty

- Improper use leading to human damage
- Damage due to improper transportation after sale
- Damage caused by failure to use the original accessories of the company as required
- Any selfmodified, disassembled and repaired product
- Replacement of wear parts
- Any natural wear

V. common problems

1. After the receiving switch is turned on, the blisters backlight will flash, which is a working signal indicating that it is in the receiving state, which is a normal phenomenon;
2. The laser line flashes to prove that the machine is not in the setting range, please adjust the level through the legs;
3. The laser line appears blurred. Please wipe the outer glass with a clean cotton cloth.

VI. Safety precautions

1. Because of Laser radiation should not look directly at the laser beam;
2. Class 2 laser crystal, harmless to human body;
3. Strictly forbidden to heavy press or vibrate;
4. The product shall be placed in the warehouse with ventilation, drying, heat-insulated and fireproofing, and it is strictly prohibited to contact with corrosive materials;
5. Loading, unloading and use of products shall be handled gently, and shall not be thrown or dropped;
6. Quality inspection certificate and packing list are attached in the packing box.

VII. Daily maintenance and attentions

1. Daily maintenance

1) Please store the machine in a dry, ventilated, constant temperature and dust-free place;
2) please wipe the shell glass frequently to ensure the light transmission;
3) when not in use for a long time, please release the locking switch for half an hour regularly to ensure that the bearing swings flexibly.

2. Attentions

1) non professionals, do not disassemble the machine;
2) please avoid severe vibration, collision and falling of the machine;
3) please pay attention to lock the locking switch after use;
4) do not leave the battery in the machine to avoid leakage of battery liquid;
5) do not look directly at the laser line. It should be used with protective glasses;
6) do not wipe the instrument with organic solvent.

Certificate

Name:
Model:
No.:
Examiner:
Date:

LASERlevel Product instructions

★ User save copy (please save this part properly)

● Warranty Card The user must present a copy of the card and an official invoice at the time of warranty to confirm your warranty. service.

User name:

Mr./Ms.: _____ Age: _____
Name of the work unit:
Occupation: ☐ Student ☐ Worker ☐Woodworking ☐Metalworking
☐ Concreteworking ☐Renovation ☐Hardware ☐Hydropower Engineering
☐ Others
Address: _____ Province _____ City _____ Road / Street _____ No.
Zip code: _____ Tel.: _____ Fax: _____
Mobile phone: _____ Product number: _____
Date of purchase: _____ Invoice receipt number: _____
Purchase company name: _____
Purchaser's address: _____
Purchaser's phone: _____
Purchaser's seal:

Please note that the conditions listed on the back are not guaranteed.

● Receipt (please fill it in and send back)
To ensure that you can enjoy the above warranty service, please fill in all forms and send the "receipt" back to our company within 7 days, which will take effect on the date of receiving the receipt!

User name:

Mr./Ms.: _____ Age: _____
Name of the work unit:
Occupation: ☐ Student ☐ Worker ☐Woodworking ☐Metalworking
☐ Concreteworking ☐Renovation ☐Hardware ☐Hydropower Engineering
☐ Others
Address: _____ Province _____ City _____ Road / Street _____ No.
Zip code: _____ Tel.: _____ Fax: _____
Mobile phone: _____ Product number: _____
Date of purchase: _____ Invoice receipt number: _____
Purchase company name: _____
Purchaser's address: _____
Purchaser's phone: _____
Purchaser's seal:

LASER LEVEL METER

3D ground and wall sticker

MAX LIGHT

User manual

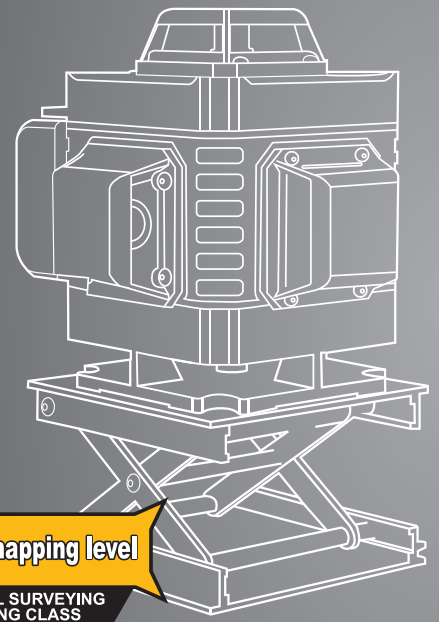

Professional mapping level

PROFESSIONAL SURVEYING AND MAPPING CLASS

Instrument specifications

Laser ray	360° X 3 12 lines (30)
	360° X 4 16 lines (40)
Laser ray	Wavelength 650nm, red light
	Wavelength 515nm, blue light
	Wavelength 532nm, green light

Horizontal / vertical accuracy: ± 0.2mm / 10m
Automatic leveling range: ±3
Waterproof grade: IP-54
Working range: about 25m in diameter
Working time: about 5 hours
Green light working temperature: -5°C~ 50°C
Blue light working temperature: -20°C~ 50°C
Red light working temperature: -20°C~ 50°C (requires a personalized custom)

激光示意图 Laser schematic　　3D全方位贴地贴墙仪 3D omnidirectional ground and wall sticker

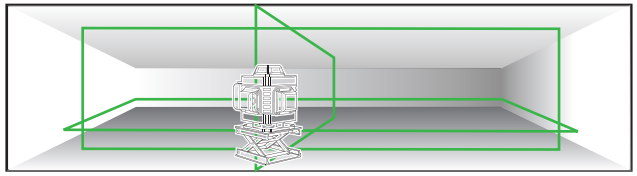

Safety Precautions

1. Because of Laser radiation should not look directly at the laser beam;
2. Class 2 laser crystal, harmless to human body;
3. Forbidden to heavy press or vibrate;
4. The product shall be placed in the warehouse with ventilation, drying, heat-insulated and fireproofing, and it is strictly prohibited to contact with corrosive materials;
5. Loading, unloading and use of products shall be handled gently, and shall not be thrown or dropped;

Daily maintenance and attentions

1. Daily maintenance
1) Please store the machine in a dry, ventilated, constant temperature and dust-free place;
2) please wipe the shell glass frequently to ensure the light transmission;
3) when not in use for a long time, please release the locking switch for half an hour regularly to ensure that the bearing swings flexibly.
2. Attentions
1) check whether the horizontal line and vertical line are accurate before each use, otherwise the construction loss caused by inaccurate laser line has nothing to do with our company;
2) non professionals, do not disassemble the machine;
3) please avoid severe vibration, collision and falling of the machine;
4) please pay attention to lock the locking switch after use;
5) do not wipe the instrument with organic solvent.

Functions and features

Functions:
1. The machine is inclined for 3° and automatically leveled;
2. Alarm function beyond the safe range;
3. The magnetic damping compensation system ensures fast leveling time;
4. 360° rotatable base, and equipped with fine adjustment mechanism, can make the machine quickly find the target;
5. It can be used with tripod to adjust the working height of the machine.

Features:
1. A 360° horizontal line can be drawn on the wall;
2. Two 360° vertical lines can be drawn on the wall;
(the 2D model has only one 360° vertical line)

LASERlevel Product instructions

Instructions

1) Place the instrument on the tripod, T-type wall mounting bracket or lifting platform as needed;
2) Push the main power switch forward to the ONposition and the machine starts to work. Thehorizontal window automatically opens and produces four horizontal laser rays;
3) Touch H key on the touch panel to control horizontal opening and closing;
4) Touch the V key on the touch panel once, open a vertical window with one click (tick), repeat again, the second vertical window opens, and the third touch closes two vertical windows;
5) Long touch the key for more than 3 seconds, and a click(tick) will be heard, and turning on the diagonal function. At this time, you can adjust it to the angle you want without alarm or flashing. Touch this key again for more than 3 seconds, with one click (tick) to release this Cfunction, the instrument works normally.

Note: The positive and negative terminals of the battery are TTproperly installed. Please remove the battery if it is not used for a long time. Please charge for more than 10 hours when you use it for the first time. Please turn off the main switch after use.

Please use the charger that matches the machine to charge.

Please use this machine in the environment where this machine is described.

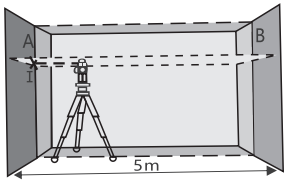

Align the laser line closer to the food wall A and level the measuring instrument to find the intersection of the laser line on the wall A and mark the center of the point (point I)

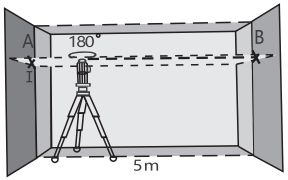

Rotate the measuring instrument 180 degrees to level the instrument, find the intersection of the laser line on the wall B, and mark the center of the point (point II)

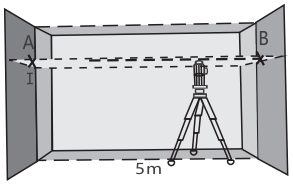

Move the measuring instrument closer to wall B (without rotating the measuring instrument),start the measuring instrument, and level the instrument.Adjust the height of the measuring instrument (with a tripod, if necessary, use the spacer), so that the intersection of the laser lines is accurately projected on point II of wall B

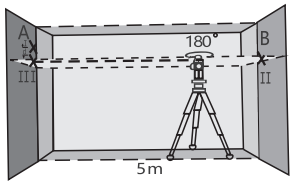

Rotate the measuring instrument 180 degrees, but you can not change the height of the measuring instrument, adjust the measuring instrument, let the vertical laser line pass through the point I of the wall A, let the measuring instrument level, and make a mark on the light intersection point of wall a (point III)
The difference d between wall point A and point III is the actual height deviation of the measuring instrument.

You can use the following formula to calculate the maximum allowable deviation, dmax, dmax = twice the wall spacing x 0.2 mm / m
Example: If the wall spacing is 5 meters, then the maximum allowable deviation dmax = 2x5 meters x 0.2 mm / m = 2 mm. Therefore, the distance between the marks should not exceed 2 mm.

LASERlevel Product instructions

Product diagram

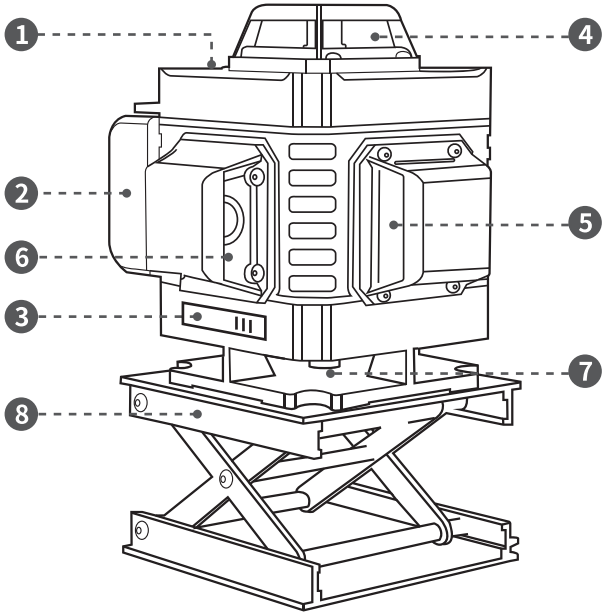

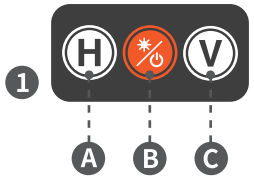

1	control panel	8	vertical lifting platform
2	battery	A	horizontal line switch
3	switch	B	OUTDOOR slash switch
4	360° horizontal line 1	C	vertical line switch
5	360° vertical line 1		
6	360° vertical line 2		
7	360° horizontal line 2		

FCC Warnning:

This equipment has been tested and found to comply with the limits for a Class B digital device, pursuant to part 15 of the FCC Rules. These limits are designed to provide reasonable protection againstharmful interference in a residential installation. This equipment generates, uses and can radiateradio frequency energy and, if not installed and used in accordance with the instructions, maycause harmful interference to radio communications. However, there is no guarantee thatinterference will not occur in a particular installation. If this equipment does cause harmfulinterference to radio or television reception, which can be determined by turning the equipmentoff and on, the user is encouraged to try to correct the interference by one or more of thefollowing measures:

- Reorient or relocate the receiving antenna.
- Increase the separation between the equipment and receiver.
- Connect the equipment into an outlet on a circuit different from that to which the receiver is connected.
- Consult the dealer or an experienced radio/TV technician for help.

Caution: Any changes or modifications to this device not explicitly approved by manufacturer could void your authority to operate this equipment.

This device complies with part 15 of the FCC Rules. Operation is subject to the following two conditions:

(1)This device may not cause harmful interference, and (2) this device must accept any interference received, including interference that may cause undesired operation.

This equipment complies with FCC radiation exposure limits set forth for an uncontrolled environment. This equipment should be installed and operated with minimum distance 0cm between the radiator and your body.