Harxon

a BDStar company

SMART Antenna

User Guide

Version/Warranty/Repair/Copyright

Version Information

Version: a

- Issue date: June 12, 2023

Warranty

- Main unit of SMART antenna: 2 year
- Customized Cable: 1 year

Notice for Return

If you need to return the product to the factory, please Contact Us.

Copyright

This product operation guide and all related software are protected by Harxon Corporation (hereinafter referred to as Harxon), and all rights are reserved. All rights in this document, including the copyright, are unique to Harxon. Unless permitted by the copyright holder, reproduction of this manual by any means such as printing, copying, and recording is strictly prohibited.

Disclaimer

Harxon has striven for the accuracy and completeness of the content in the process of compiling this document. However, Harxon does not assume any responsibility for any possible errors or omissions. As technologies continue to develop, Harxon reserves the rights to change the technical specifications or functions of the products without notifying the users in writing.

Contents

Version/Warranty/Repair/Copyright 2
Warranty 2
Notice for Return 2
Copyright 2
Disclaimer 2
Contents 3
Figures 5
Tables 6
Precautions 7
Symbol Conventions 7
Abbreviations 7
User Services 8
FAQs 8
Record Information 8
Contact Us 8
1. Overview 9
1.1 Product Features 9
1.2 Conventions 9
2. Assembly and Installation 10
2.1 Required Accessories 10
2.2 Additionally Required Devices (Provided by Users) 10
2.3 Product Assembly 10
2.3.1 Installing the SMART Antenna Roving Station 10
2.4 Connection to HX-TS122 and Other Devices 11
2.4.1 Serial Port Connection 11
2.4.2 Bluetooth Connection 12
2.5 Installing the SMART Antenna 12
2.5.1 Mounting Hole Location 13
2.5.2 Installation Orientation 13
2.6 Power Supply Demand 13
2.7 Checking Whether the SMART Antenna Works Properly 14
3. HX-TS122 Operation Instructions 14
3.1 Receiver Communication 14
3.1.1 Bluetooth Communication 14
3.1.2 Serial Communication 15
3.2 Startup 15

3.2.1 Communication with the Receiver 15
3.3 Terrain Compensation 15
3.4 Slide Technology 16
3.5 Enabling the SBAS Positioning 17
3.6 Firmware Update 17
3.6.1 Update of SMART Antenna Main Unit Firmware 17
Appendix A Technical Specifications 19
A.1 Specifications of SMART Antenna Roving Station 19
A.2 SMART Antenna Suite Accessories 20
A.2.1 SMART Antenna Configuration Cable (JG020) 20
Appendix B Commands 21
Appendix C Output Protocol 21
C.1 NMEA0183 21
C.1.1 GGA Positioning Result 21
C.1.2 GSA Satellite PRN Data 22
C.1.3 GSV Satellite Status Data 23
C.1.4 RMC Transportation Positioning Data 23
C.1.5 VTG Attitude Data 24
C.1.6 ZDA Time Data 24
Appendix D Alternative Parts 26
D.1 Accessories of SMART Antenna Roving Station 26
Appendix E FAQs of SMART Antenna 26
Abnormal LED indication 26

Figures

Figure 1 SMART antenna 9
Figure 2 Schematic diagram of SMART antenna data interfaces 10
Figure 3 Assembly drawing of the main unit of SMART antenna roving station 11
Figure 4 Magnetic adsorption installation① 12
Figure 5 Installation using the M4 screw hole 13
Figure 6 Diagram of SMART antenna installation orientation 13
Figure 7 SMART antenna height measurement 16
Figure 8 Updating... 17
Figure 9 Successfully updated 18
Figure 10 Structural dimensions of SMART antenna main unit 20
Figure 11 Structural dimension of SMART antenna configuration cable (M12-A-S8-DB9) 20

Tables

Table 1 Symbol conventions 7
Table 2Definition of SMART antenna data interfaces 10
Table 3 List of the main unit components of SMART antenna roving station .. 11
Table 4 Specifications of SMART antenna roving station 19
Table 5 List of SMART antenna configuration cable components (M12-A-S8-DB9) 20
Table 6 SMART antenna command format 21
Table 7 List of NMEA0183 output protocols 21
Table 8 GGA GPS data 21
Table 9 GSA satellite PRN data 22
Table 10 GSV satellite status data 23
Table 11 RMC transportation positioning data 23
Table 12 PSAT attitude angle data 24
Table 13 ZDA time data 24
Table 14 List of available accessories for the main unit components of SMART antenna roving station 26

Precautions

Symbol Conventions

Table 1 Symbol conventions

Symbol	Description	Remarks
①	Indicates that the current page has notes on this indicator/item.	When there are multiple notes on a page, the number in the symbol will increase.
ⓘ	Indicates the notices that users need to pay attention to.	

Abbreviations

BT	Bluetooth
DOP	Dilution of Precision
GGA	Global Positioning System Fix Data. Time, Position and fix related data for a GPS receiver
GLONASS	GLObalNAvigation Satellite System
GNSS	Global Navigation Satellite System
GPS	Global Positioning System
GSA	GPS DOP and active satellites
GSV	Satellites in view
MSAS	Multi-Functional Satellite Augmentation System
NMEA	National Marine Electronics Association
RMC	Recommended Minimum Navigation Information
RTCM	Radio Technical Commission for Maritime Services
RTK	Real Time Kinematic
SBAS	Satellite-Based Augmentation System
UTC	Coordinated Universal Time
WAAS	Wide Area Augmentation System

User Services

FAQs

If you encounter some technical problems, please see the solutions described in the "FAQs of SMART Antenna" section in this document. This chapter describes the symptoms, causes and solutions of some common issues.

Record Information

If a technical issue encountered is not recorded in the document, please record the application environment, operation steps, and problem symptoms before and after the device becomes abnormal, and record the product model, product hardware version, firmware version and other related information.

You can query the product model, product hardware version, firmware version and other information using the SMART Antenna Configuration Tools.

Contact Us

Please contact us for more support.

Service hotline: +86-755-26989948 (8:30-12:00 13:30-18:00)
Sales hotline: +86-755-86578389 (8:30-12:00 13:30-18:00)
Enterprise fax: +86-755-26989994
Enterprise email: sales@harxon.com

1. Overview

SMART antenna is a high-performance GNSS receiver.The product has a built-in GNSS antenna and a single-frequency multi-system board, which can simultaneously track GPS, BDS, GLONASS, and GALILEO system signals. The SMART antenna indicates working status using one bi-color LED indicator.

Figure 1 SMART antenna

1.1 Product Features

Major functional features of the SMART antenna are as follows:

- High-performance boards that can track GPS L1C/A, BDS B1I, GLONSS L10F, GALILEO E1B/C and QZSS L1C/A/S signals simultaneously
- High-performance GNSS antenna
- Two RS232 interfaces
- Bluetooth module
- One LED status indicator
- IP67 protection
- Three mounting modes: magnetic adsorption, M5 screw hole, 5/8"-11 screw

1.2 Conventions

This document adopts the following conventions:

• The characters following 0x are hexadecimal digits.

• The characters used in commands are case sensitive.

2. Assembly and Installation

2.1 Required Accessories

- SMART antenna roving station and cable used to connect to the computer (cable equipped for the SMART antenna based on demands)

2.2 Additionally Required Devices (Provided by Users)

- Computer (or mobile phone)
- Power supply

2.3 Product Assembly

2.3.1 Installing the SMART Antenna Roving Station

1. Connect the SMART antenna configuration cable to the SMART antenna. Figure2 shows the SMART antenna data interfaces, and Table 2 describes the data interfaces.

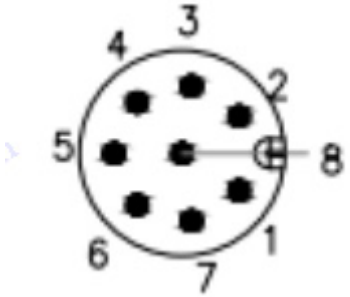

Figure 2 Schematic diagram of SMART antenna data interfaces

Table 2Definition of SMART antenna data interfaces

S/N	Pin Name	Pin Direction	Pin Usage
1	VCC		Positive Power Supply
2	GND		Power Ground
3	TXD1	Output	Data Port
4	RXD1	Input	
5	GND		
6	TXD2	Output	Configure Port
7	RXD2	Input	
8	GND		

2. Connect the SMART antenna configuration cable to the DB9 serial port on the computer.

3. Connect the SMART antenna configuration cable to the power supply. Turn on the power supply. The LED indicator of the SMART antenna roving station is on red.

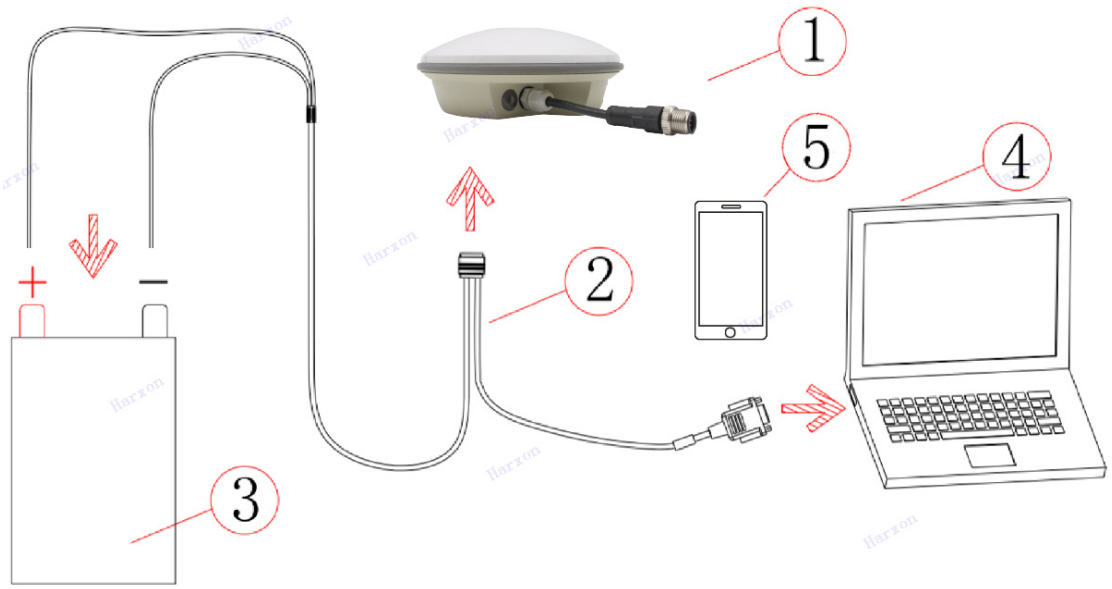

Figure 3 Assembly drawing of the main unit of SMART antenna roving station

Table 3 List of the main unit components of SMART antenna roving station

Reference ID	Description	Model
1	SMART antenna roving station	HX-TS122
2	SMART antenna configuration cable	M12-A-S8-DB9
3	Power supply	Provided by the user
4	Computer	Provided by the user
5	Mobile phone or tablet computer	Provided by the user

2.4 Connection to HX-TS122 and Other Devices

HX-TS122 can communicate with other devices in the system, such as serial ports and Bluetooth ports of the computer.

2.4.1 Serial Port Connection

HX-TS122 has two RS232 serial ports, namely, COM1 and COM2. The ports are on a 8-pin connector. For more information about the pin output of the connector, see Figure 2 and Table 2 in section 2.3.1. Connection serial ports:

1. Connect the interface cable (M12-A-S8-DB9) of HX-TS122 or the customized cable to the 8-pin connector.

2. Connect the appropriate DB9 connector to the serial port of the computer or the other data communication device.

2.4.2 Bluetooth Connection

HX-TS122 comes with the Bluetooth connection function, which is enabled by default. This makes the device easily connect to any laptop computers, tablet computers, and smartphones with Bluetooth function.

1. Once HX-TS122 receiver is installed and energized, you can use a laptop computer, tablet, or smartphone to search for the Bluetooth device of HX-TS122 (the Bluetooth name is the product SN) and establish a Bluetooth connection.

2. The establishment of Bluetooth connection may require a security password. Currently, the default password is 0000, which cannot be modified.

Note: Because the Bluetooth data communication involves a large amount of data, do not attempt to connect to the Bluetooth device with the suffix LE if the current Bluetooth version is Classic Bluetooth V2.0.

2.5 Installing the SMART Antenna

Install the SMART antenna in a safe, stable and open environment. The SMART antenna can be installed in the following ways:

- Magnetic adsorption
- M5 screw hole
- Alignment screw

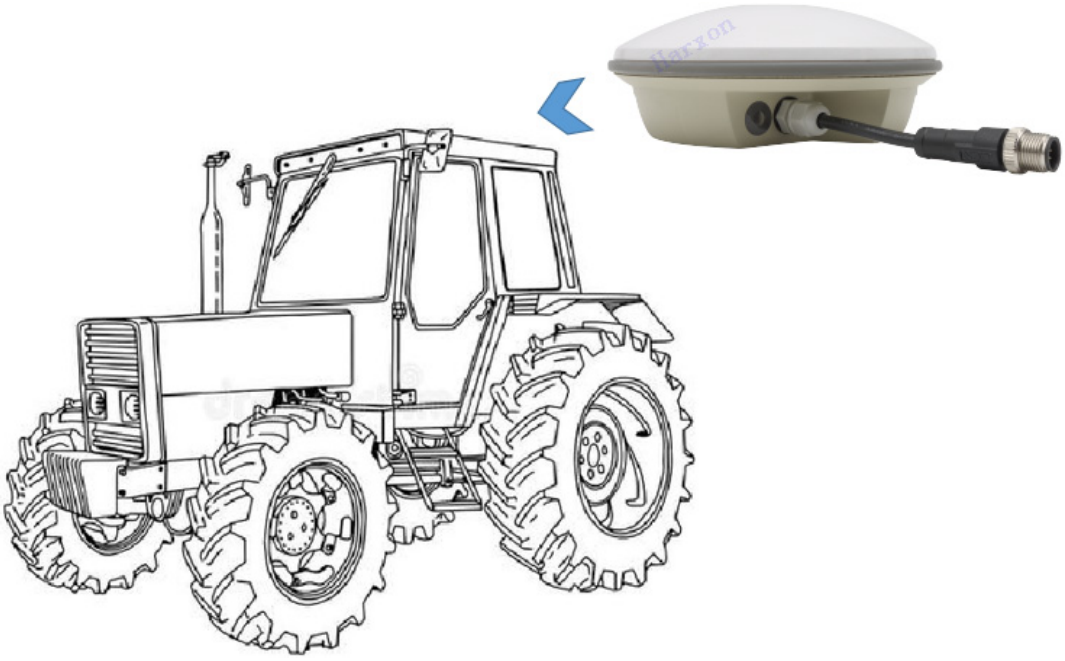

Figure 4 Magnetic adsorption installation①

Note:

①The installation method in the schematic diagram is only used to illustrate the magnetic adsorption method. The antenna is not necessarily installed on the tractor.

2.5.1 Mounting Hole Location

Figure 5 shows the HX-TS122 mounting hole location.

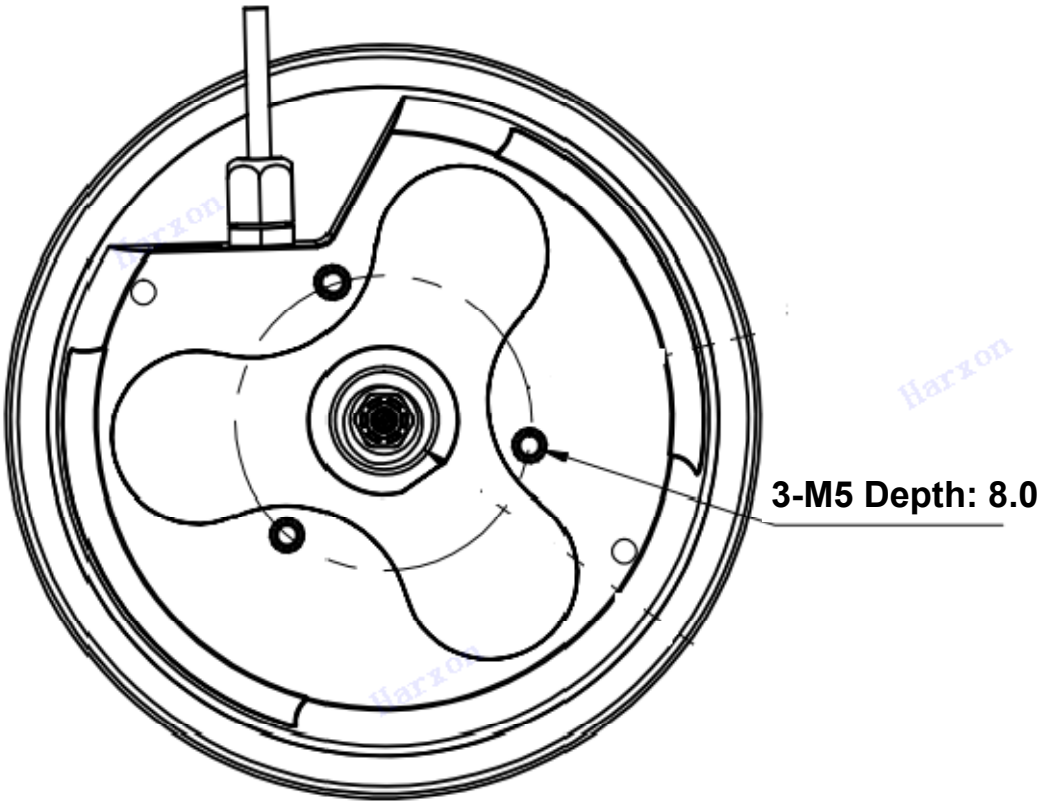

Figure 5Installation using the M4 screw hole

2.5.2 Installation Orientation

Ensure that the HX-TS122 bottom case silkscreen heading mark is consistent with the forward direction of the vehicle.

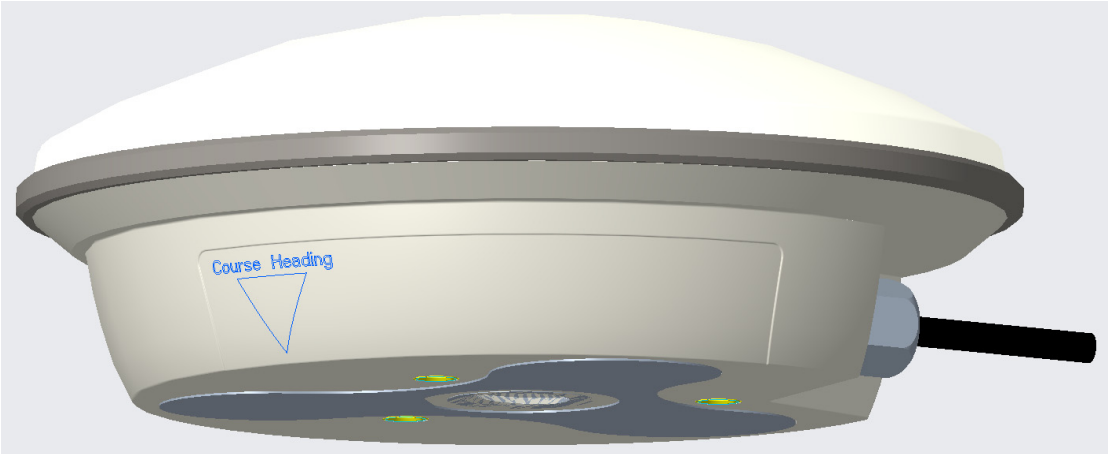

Figure 6 Diagram of SMART antenna installation orientation

2.6 Power Supply Demand

To make the SMART antenna roving station work in the optimal status, ensure that the external power supply meets the following conditions:

- 9–36 V DC input
- Power output capability of at least 5 W (typical application: 0.5–1 W)
- 3 A external fuse

The internal power module of the SMART antenna roving station provides the following functions:

- Overvoltage, undervoltage, and reverse voltage protection
- Automatic reset protection

2.7 Checking Whether the SMART Antenna Works Properly

After the SMART antenna is installed and powered on, determine whether it is in a normal working status through the LED indicator. When the power is just turned on, the LED indicator blinks red and green alternatively, and then the indicator is steady on red, indicating that the power supply is normal. After a period of time, the LED indicator is steady on green (a little yellow), indicating that the satellite signal receiving is normal.

3. HX-TS122 Operation Instructions

Before operating the receiver for the first time, see Chapter 2 "Assembly and Installation" for HX-TS122 installation instructions.

3.1 Receiver Communication

The receiver can communicate with the data terminal or computer in the following ways:

- Bluetooth
- Serial port

After you connect the data terminal or computer to the receiver, you can enter commands directly on the terminal or using the terminal simulation software on the computer. For example:

HX-TS122 Configuration Tool is a software application used to debug and configure the HX-TS122 receiver. For more information about the HX-TS122 Configuration Tool, see the Help provided by the application.

3.1.1 Bluetooth Communication

By default, the receiver that supports the Bluetooth function adopts Classic Bluetooth V2.0.

You can use a laptop computer, tablet computer, or smartphone that supports the Bluetooth function to search for the Bluetooth device of HX-TS122 receiver and establish a Bluetooth connection.

After the connection is established, read and configure the receiver parameters using the app configuration tool provided by the Android system.

In addition, Bluetooth can be used as a data communication interface to implement data communication between the terminal and the receiver. You can configure the Bluetooth port of the receiver as the output port of positioning information, and enable the function by configuring the command **$CFG ROVER OUTPORT BT\r\n**.

3.1.2 Serial Communication

The receiver can communicate with a computer or terminal through a serial port. In order to communicate with each other, both the receiver and the operating interface must have the same serial port configuration. The default port configuration of the receiver is as follows:

115200 bps

No parity

8 data bits

1 stop bit

The communication baud rate of serial port 1 and serial port 2 can be modified by the configuration commands **$CFG HOST BAUD Rate\r\n** and **$CFG EXTERN Rate\r\n** respectively. The baud rate can be set to 9600, 19200, 38400, 57600, and 115200.

Serial port 1 and serial port 2 can be used for reading and setting received parameters. They can also be used for outputting positioning information, with the command **$CFG ROVER OUTPORT COM1\r\n** or **$CFG ROVER OUTPORT COM2\r\n**.

3.2 Startup

HX-TS122 receiver can save and record the parameters configured last time, and output its basic information through serial port 1 according to the saved information after it is powered on. After parameters are configured, some parameter updates may not take effect immediately, and they will only take effect after you run the **$CFG DEBUG QUIT\r\n** configuration command.

3.2.1 Communication with the Receiver

The communication between the HX-TS122 receiver and the user can be implemented through two serial ports and the Bluetooth port. The above ports can be configured to respond to configuration commands. For specific commands, see the product command manual.

3.3 Terrain Compensation

When the ground is not flat, the receiver will have a tilt. When there is a tilt, the coordinates measured by the SMART antenna are different from the actual ground coordinates, resulting in an error in the measurement. Terrain compensation can correct the ground coordinate error caused by the tilt. By tracking the change of the 3D attitude angle (pitch, roll, and yaw) measured by the sensor on the SMART antenna and using the height of the SMART antenna from the ground, the system can obtain the ground coordinates and

adaptively make compensation to the ground coordinates to eliminate the problem of trajectory offset in complex terrain movement.

Procedure for terrain compensation

1. Install the SMART antenna at a flat place.
2. Measure the height of the SMART antenna from the ground and configure the height to the SMART antenna.

   For example, if the measured height is 2.0 meters, run the **$CFG TERRAIN HEIGHT 2.0\r\n** command to configure the height. If the antenna returns **OK**, the configuration is successful.
3. Implement horizontal calibration.

   Run the **$CFG IMU TILTZERO\r\n** command to implement horizontal calibration. If the antenna returns **OK**, the configuration is successful.

The following information provides location information for terrain compensation:

- GGA

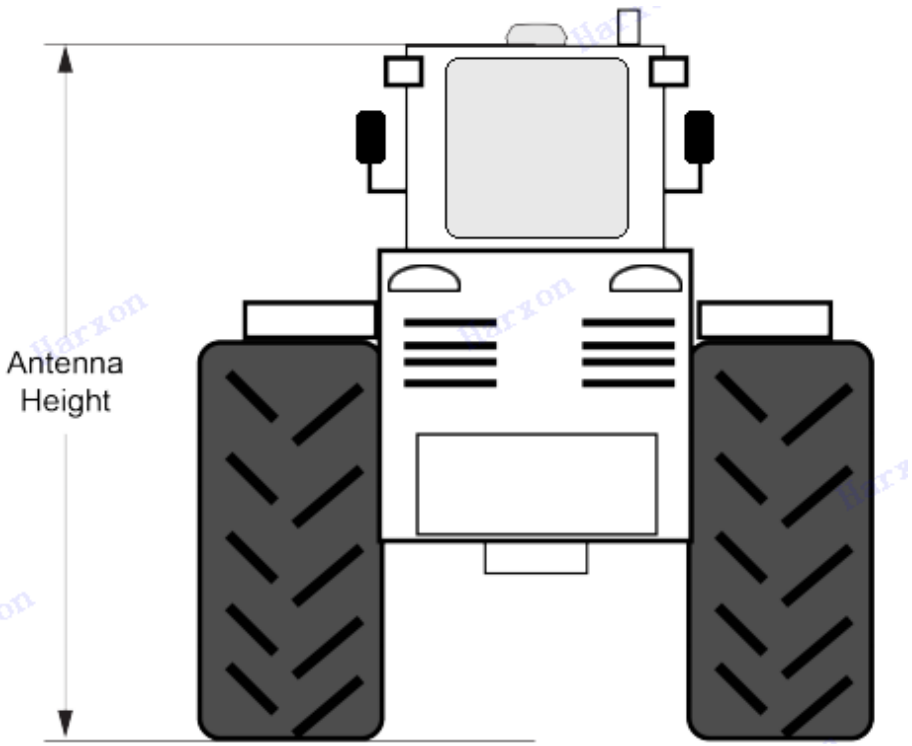

Figure 7 SMART antenna height measurement

3.4 Slide Technology

The slide technology integrates the IMU to predict the positioning location and adaptively filters and smoothens the predicted location and the measured position. When the satellite signals are interrupted, the system can still output correct location coordinates to avoid the issue of discontinuous motion trajectory coordinates due to signal interruption. In addition, adaptive filtering reduces positioning errors, smoothens trajectories, and further improves relative positioning accuracy, which is suitable for pass-to-pass applications.

The slide function is configured as follows:

Run the **$CFG SLIDE ON\r\n** or **$CFG SLIDE OFF\r\n** command to enable or disable the slide function.

3.5 Enabling the SBAS Positioning

HX-TS122 receiver can receive multiple SBAS signals simultaneously, even from different SBAS systems (such as WAAS, EGNOS, and MSAS). Run the **$CFG GNSS SBAS ON\r\n** or **$CFG GNSS SBAS OFF\r\n** command to enable or disable the SBAS positioning function.

3.6 Firmware Update

3.6.1 Update of SMART Antenna Main Unit Firmware

The update of the SMART antenna main unit is implemented on the application firmware of the baseboard of the SMART antenna main unit. The software supports only Windows 7 and Windows 10 OSs instead of Linux and iOS OSs. The procedure of the main unit firmware update is as follows:

1. Connect the computer to the SMART antenna main unit using a serial cable, and power on the SMART antenna.
2. Open the bootupdate V1.2 antenna update tool on the computer, and select the corresponding serial port and serial port baud rate (115200 by default). Select the Modem Firmware and select the firmware (file name suffix is dwn) to start the update, as shown in Figure 8 and Figure 9.

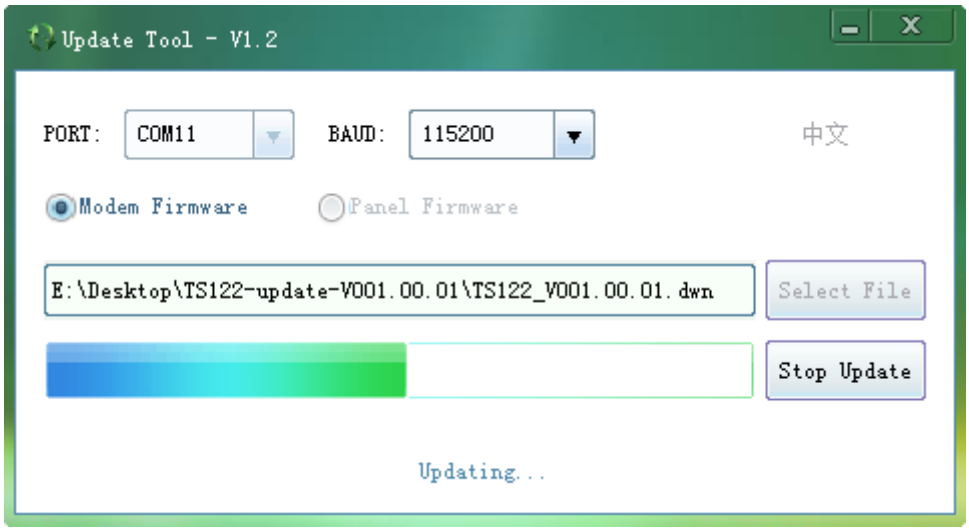

Figure 8 Updating...

Figure 9Successfully updated

Appendix A Technical Specifications

A.1 Specifications of SMART Antenna Roving Station

Table 4 Specifications of SMART antenna roving station

Specification Name	Specification Requirement	
Tracking signal①	GPS L1C/A, BDS B1I, GLONSS L10F, GALILEO E1B/C, QZSS L1C/A/S	
First positioning time①	Cold start: 50s	
Single point positioning precision (RMS)①	Horizontal	1.5 m
	Vertical	2 m
PASS TO PASS precision (RMS)①		30 cm
Data rate (maximum)①	10 Hz	
Differential data protocol①	RTCM 2.x/3.x	
Data protocol①	NMEA0183	
Data interface	Serial port (RS232 level)	
Dimensions	Diameter 152 × height 57.7 (mm)	
Weight	<500 g	
Power Consumption	1 W (typical)	
IP rating	IP67	
Operating temperature	-40℃ to+70℃	
Storage temperature	-55℃ to+85℃	
Humidity	95%, non-condensing	
Vibration	MIL-STD-810	
Impact	MIL-STD-810	

Note:

①These performance indicators are related to GNSS boards, and may vary with GNSS boards.The GNSS performance of different products is stated in the selection list in the product brochure. If you need more help, please Contact Us.

Structural dimensions (mm)

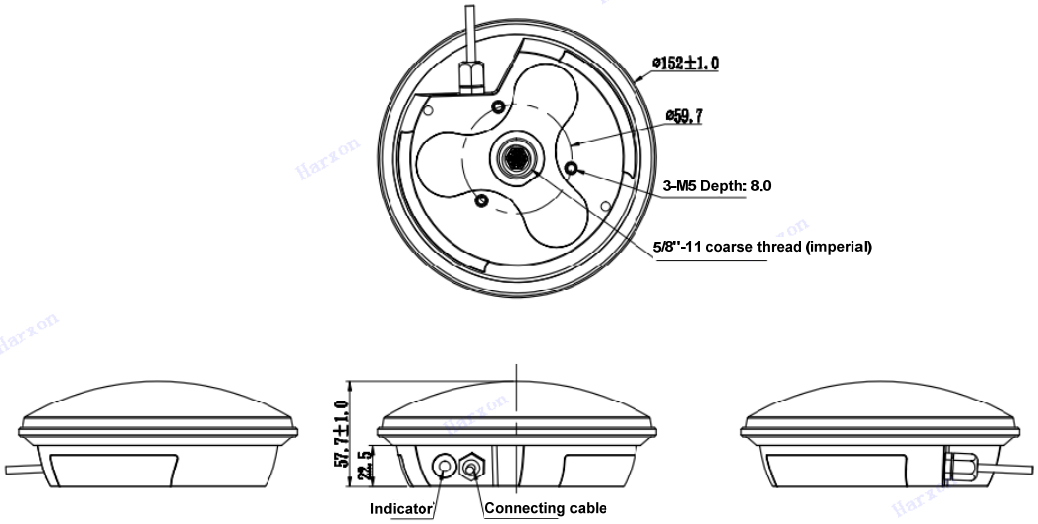

Figure 10 Structural dimensions of SMART antenna main unit

A.2 SMART Antenna Suite Accessories

A.2.1 SMART Antenna Configuration Cable (JG020)

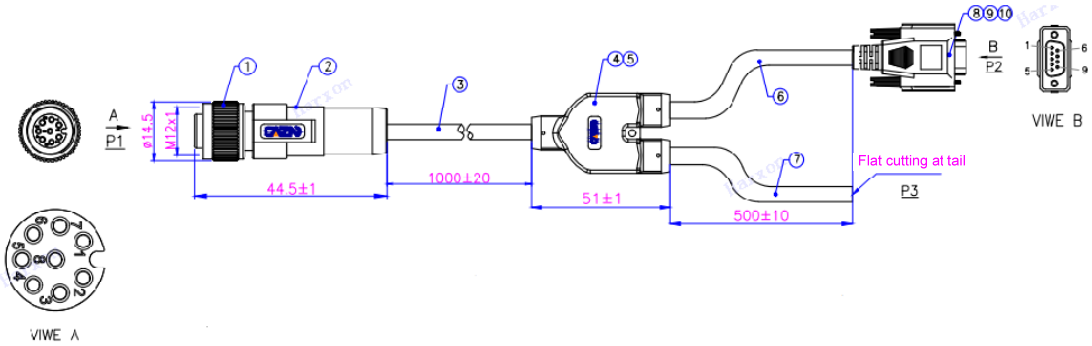

Figure 11 Structural dimension of SMART antenna configuration cable (M12-A-S8-DB9)

Table 5 List of SMART antenna configuration cable components (M12-A-S8-DB9)

Wire Diagram			
P1	P2	P3	Pin Usage
1		White	Positive Power Supply
2		Brown	Power Ground
3		Blue	Transmit Data
4		Black	Receive Data
5		Grey	Data Ground
6	2		Configure Serial Port
7	3		
8	5		

Appendix B Commands

SMART antenna roving station supports the following working modes:

- Normal working mode
- Debugging module mode
- Straight-through module mode

The main unit must be in normal working mode to switch to other working modes.All commands must begin with "$CFG". There must be a space between "$CFG" and the specific command. The commands must end with "\r\n", as shown in Table 22.

Table 6 SMART antenna command format

Command head ($CFG)	Space character (0x20)	Commands	Parameter (some commands do not have parameters)	End character

Note: For specific commands, see the HX-TS122 configuration command table in the related documents.

Appendix C Output Protocol

C.1 NMEA0183

Table 7 List of NMEA0183 output protocols

SN	Commands	Description	Remarks
1	$GPGGA	GPS data	Standard NMEA0183
2	$GPGSA	Satellite PRN data	Standard NMEA0183
3	$GPGSV	Satellite status information	Standard NMEA0183
4	$GPRMC	Transportation positioning data	Standard NMEA0183
5	$GPVTG	Ground speed information	Standard NMEA0183
6	$GPZDA	Time data	Standard NMEA0183

C.1.1 GGA Positioning Result

For example:

$GPGGA,135324.00,5106.9791988,N,11402.3002127,W,2,09,1.0,1047.606,M,,,04,AAAA*1C

Table 8 GGA GPS data

Field	Structure	Field Description	Symbol	Example
1	$GPGGA	Log head		$GPGGA
2	utc	UTC time status (hour/minute/second/decimal place of second)	hhmmss.ss	220417.50
3	lat	Latitude (DDmm.mm)	llll.ll	5106.7194489

4	latdir	Latitude direction (N=North, S=South)	a	N
5	lon	Longitude (DDDmm.mm)	yyyyy.yy	11402.3589020
6	londir	Longitude direction (E=East, W=West)	a	W
7	GNSS Status	GPS quality indicators 0 = Invalid solution 1 = Single point positioning solution 2 = Pseudorange differential solution, omniSTAR HR, omniSTAR XP, omniSTAR VBS, or CDGPS 4 = RTK fixed solution 5 = RTK floating point solution, omniSTAR HR, omniSTAR XP 6 = Track calculation mode 7 = User fixed position 8 = Simulator mode 9 = WAAS	x	1
8	#sats	Total number of satellites in use, which may be different from the number of visible satellites	xx	08
9	hdop	Horizontal longitude factor	x.x	0.9
10	alt	Antenna height above/below mean sea level	x.x	1080.406
11	units	Antenna height unit	M	M
12	null	Field that cannot be used on OEMV series receivers		It is null when there is no differential data currently.
13	null	Field that cannot be used on OEMV series receivers		
14	age	Number of weeks of differential GPS data (within a few seconds)	xx	
15	stn ID	IDs of different base stations	xxxx	
16	*xx	Checksum	*hh	*48
17	[CR][LF]	End of statement		[CR][LF]

C.1.2 GSA Satellite PRN Data

For example:

$GPGSA,M,3,17,02,30,04,05,10,09,06,31,12,,,1.2,0.8,0.9*35

Table 9 GSA satellite PRN data

Field	Structure	Field Description	Symbol	Example
1	$GPGSA	Log head		$GPGSA
2	MA mode	A=Automatic 2D/3D M=Manual, mandatory in 2D/3D operation	M	M
3	1D, 2D, or 3D mode	Mode: 1=Invalid; 2=2D; 3=3D	x	3
4-15	prn	Total number of satellite PRNs in use (the unused fields are empty). There are a total of 12 fields. GPS = 1 to 32 SBAS = 33 to 64 (the total number of PRNs increased by 87) GLO = 65 to 96	xx.xx, ...	18,03,13, 25,16, 24,12, 20, ...

16	pdop	Location precision factor	x.x	1.5
17	hdop	Horizontal precision factor	x.x	0.9
18	vdop	Vertical precision factor	x.x	1.2
19	*xx	Checksum	*hh	*3F
20	[CR][LF]	End of statement		[CR][LF]

C.1.3 GSV Satellite Status Data

For example:

$GPGSV,3,1,8,18,87,050,48,22,56,250,49,21,55,122,49,03,40,284,47*78

$GPGSV,3,2,11,19,25,314,42,26,24,044,42,24,16,118,43,29,15,039,42*7E

Table 10 GSV satellite status data

Field	Structure	Field Description	Symbol	Example
1	$GPGSV	Log head		$GPGSV
2	#msgs	Total number of messages	x	3
3	msg#	Message ID	x	1
4	#sats	Total number of visible satellites, which may be different from the total number of satellites in use	xx	09
5	prn	Number of satellite PRNs GPS = 1 to 32 SBAS=33 to 64 (PRN#s increased by 87) GLO = 65 to 96	xx	03
6	elev	Altitude, angle, upper limit of 90	xx	51
7	azimuth	Azimuth, true angle, 000 to 359	xxx	140
8	SNR	SNR (C/No) 00-99dB. The value is empty when there is no tracking.	xx	42
... ...				
Variable	*xx	Checksum	*hh	*72
Variable	[CR][LF]	End of statement		[CR][LF]

C.1.4 RMC Transportation Positioning Data

For example:

$GPRMC,144326.00,A,5107.0017737,N,11402.3291611,W,0.080,323.3,210307,0.0,E,A*20

Table 11 RMC transportation positioning data

Field	Structure	Field Description	Symbol	Example
1	$GPRMC	Log head		$GPRMC
2	UTC	Position UTC	hhmmss.ss	144326.00

3	Pos status	Position status A = Valid data V = Invalid data	A	A
4	lat	Latitude (DDmm.mm)	llll.ll	5107.0017737
5	latdir	Latitude direction (N=North, S=South)	a	N
6	lon	Longitude (DDDmm.mm)	yyyyy.yy	11402.3291611
7	londir	Longitude direction (E=East, W=West)	a	W
8	speed Kn	Ground speed, nautical mile/hour	x.x	0.080
9	track true	Track calculation, true angle	x.x	323.3
10	date	Date: DD/MM/YYYY	xxxxxx	210307
11	mag var	Magnetic variable, degree	x.x	0.0
12	vardir	Direction of magnetic variable, east/west	a	E
13	mode ind	Positioning system mode indication	a	A
14	*xx	Checksum	*hh	*20
15	[CR][LF]	End of statement		[CR][LF]

C.1.5 VTG Attitude Data

For example:

$GPVTG,148.84,T,151.73,M,0.04,N,0.07,K,A*3E

Table 12 PSAT attitude angle data

Field	Structure	Field Description	Symbol	Example
1	$GPVTG	Log head		$GPVTG
2	Track true	True north track	x.x	148.84
3	T	True north flag	T	T
4	Track mag	Magnetic north track	x.x	151.73
5	M	Magnetic north flag	M	M
6	Speed Kn	Ground rate (unit: knot)	x.x	0.04
7	N	Velocity unit: knot	N	N
8	Speed Km	Ground rate (unit: km/h)	x.x	0.07
9	k	Speed unit: km/h	K	K
10	Mode ind	Mode indication	a	A
11	*xx	Checksum	*xx	*3E
12	[CR][LF]	End of statement		[CR][LF]

C.1.6 ZDA Time Data

For example:

$GPZDA, 010708.00, 05, 04, 2007, 00, 00*6C

Table 13 ZDA time data

Field	Structure	Field Description	Symbol	Example

1	$GPZDA	Log head		$GPZDA
2	utc	UTC time status (hour/minute/second/decimal place of second)	HHmmss.ss	010708.00
3	UTC date: Day	UTC time: Day	xx	05
4	UTC date: Month	UTC time: Month	xx	04
5	UTC date: Year	UTC time: Year	xxxx	2007
6	Local time domain description	Local time domain description, unit: hour, xx=–13 to 13	xx	00
7	Local time domain description	Local time domain description, unit: minute, yy=0 to 59	xx	00
8	*xx	Checksum	*hh	*6c
9	[CR][LF]	End of statement		[CR][LF]

Appendix D Alternative Parts

The following lists available parts for HARXON SMART antenna roving station. If you need any help or you need to order more parts, please Contact Usand communicate with the sales personnel.D.1 Main Unit of SMART Antenna Roving Station

D.1 Accessories of SMART Antenna Roving Station

Table 14 List of available accessories for the main unit components of SMART antenna roving station

Component Description	Harxon BOM
M12-A-S8-DB9 configuration cable	99.00017979

Appendix E FAQs of SMART Antenna

Abnormal LED indication

- If the LED indicator does not turn on green normally for a period of time after the power is on, no single point positioning is successful. There may be some obstacles or the SMART antenna roving station has some issues. Ensure that the SMART antenna roving station is located in an area with a wide view. Restart the SMART antenna roving station.
- If all indicators of the SMART antenna are off,
  - a) Check whether the cabling is consistent with that illustrated in Figure 5 (the data link is provided by the built-in radio station).
  - b) Check whether the power supply has normal voltage and is in good contact, and whether the positive and negative poles are correctly connected.
  - c) Check whether the voltage of the device after connecting to the power supply is normal.

Any Changes or modifications not expressly approved by the party responsible for compliance could void the user's authority to operate the equipment.

This device complies with part 15 of the FCC Rules. Operation is subject to the following two conditions: (1) This device may not cause harmful interference, and (2) this device must accept any interference received, including interference that may cause undesired operation.

Note: This equipment has been tested and found to comply with the limits for a Class B digital device, pursuant to part 15 of the FCC Rules. These limits are designed to provide reasonable protection against harmful interference in a residential installation. This equipment

generates,uses and can radiate radio frequency energy and, if not installed and used in accordance with the instructions, may cause harmful interference to radio communications. However, there is no guarantee that interference will not occur in a particular installation. If this equipment does cause harmful interference to radio or television reception, which can be determined by turning the equipment off and on, the user is encouraged to try to correct the interference by one or more of the following measures:

—Reorient or relocate the receiving antenna.

—Increase the separation between the equipment and receiver.

—Connect the equipment into an outlet on a circuit different from that to which the receiver is connected.

—Consult the dealer or an experienced radio/TV technician for help.

This equipment complies with FCC radiation exposure limits set forth for anuncontrolled environment.This equipment should be installed and operated with minimum distance 20cm between the radiator& your body.

This transmitter must not be co-located or operating in conjunction with any other antenna or transmitter.

HARXON CORPORATION

Add：6/F，Block B, D3 Building，TCL InternationalE City，No.1001 Zhongshanyuan Road，NanshanDistrict，Shenzhen，518055，PRC

Tel：+86 -755-26989948 Fax：+86 -755-26989994

E-mail：sales@harxon.com Web：www.harxon.com