TEST REPORT

Applicant: **Address:**	**DEEEPSEA DEVELOPMENTS** **AV 5N # 37A - 74, CALI - COLOMBIA**		
Manufacturer: **Address:**	**DEEEPSEA DEVELOPMENTS** **AV 5N # 37A - 74, CALI - COLOMBIA**		
Factory: **Address:**	**MOKO TECHNOLOGY Ltd** **Factory 201, 107 Pinshun Rd Guixiang community, Guanlan Street, Longhua, Shenzhen, China 518110**		
E.U.T.:	**DSD EVSE PORTABLE**		
Model Number:	**DSDEVP16AV3，MB42081492**		
Trade mark:	**MUBON**		
FCC ID:	**2BDE6-DSDEVP16AV3**		
Date of Receipt:	**Oct. 30, 2023**	**Date of Test:**	**Oct. 30- Dec 21, 2023**
Test Specification:	**FCC 47 CFR Part 15, Subpart C**		
Test Result:	**The equipment under test was found to be compliance with the requirements of the standards applied.**		

Prepared by:

Jerry Hu/ Engineer

Approved & Authorized Signer:

Frank Shen/ Manager

Issue Date: December 21, 2023

This test report is based on a single evaluation of one sample of above mentioned products. It is not permitted to be duplicated in extracts without written approval of Dongguan Lepont Service Co., Ltd.

TABLE OF CONTENTS

1. GENERAL PRODUCT INFORMATION 4

1.1. PRODUCT FUNCTION 4
1.2. EUT TECHNICAL DESCRIPTION 4
1.3. INDEPENDENT OPERATION MODES 5

2. TEST STANDARDS AND SITES 6

2.1. DESCRIPTION OF STANDARDS AND RESULTS 6
2.2. LIST OF TEST AND MEASUREMENT INSTRUMENTS 7
2.3. MEASUREMENT UNCERTAINTY 8
2.4. TEST FACILITY 8

3. SETUP OF EQUIPMENT UNDER TEST 9

3.1. RADIO FREQUENCY TEST SETUP 1 9
3.2. RADIO FREQUENCY TEST SETUP 2 9
3.3. CONDUCTED EMISSION TEST SETUP 11
3.4. BLOCK DIAGRAM CONFIGURATION OF TEST SYSTEM 11
3.5. SUPPORT EQUIPMENT 12

4. TEST RESULTS AND MEASUREMENT DATA 13

4.1. DTS (6DB) BANDWIDTH 13
4.2. MAXIMUM PEAK CONDUCTED OUTPUT POWER 21
4.3. MAXIMUM POWER SPECTRAL DENSITY 23
4.4. UNWANTED EMISSIONS IN NON-RESTRICTED FREQUENCY BANDS 31
4.5. RADIATED SPURIOUS EMISSION 52
4.6. CONDUCTED EMISSION TEST 63
4.7. ANTENNA APPLICATION 66

Revision History of This Test Report		
Report Number	Description	Issued Date
LP23070055C01-01	Initial Issue	2023-12-21

1. GENERAL PRODUCT INFORMATION

1.1. PRODUCT FUNCTION

Refer to Technical Construction Form and User Manual.

1.2. EUT TECHNICAL DESCRIPTION

Product Name:	DSD EVSE PORTABLE
Model No.:	DSDEVP16AV3, MB42081492
Test Model No:	DSDEVP16AV3
Difference	The schematic diagram, PCB and module of all models are identical, only the model name and component LED are different. which does not affect the test results. the difference does not affect the safety and electromagnetic compatibility of the product.
Serial No.:	N/A
Test sample(s) ID:	LP2307055C01-S001
Sample(s) Status	Engineer sample
Hardware:	V1.4 Rev A
Software:	V1.4 Rev A
IEEE 802.11 WLAN Mode Supported :	☒ 802.11b ☒ 802.11g ☒ 802.11n(20MHz channel bandwidth) ☒ 802.11n(40MHz channel bandwidth)
Modulation :	DSSS with DBPSK/DQPSK/CCK for 802.11b; OFDM with BPSK/QPSK/16QAM/64QAM for 802.11g/n;
Operating Frequency Range :	☒ 2412-2472MHz for 802.11b/g/n(HT20) ☒ 2422-2462MHz for 802.11n(HT40)
Number of Channels :	☒ 13 channels for 802.11b/g/n(HT20); ☒ 9 channels for 802.11n(HT40);
Antenna Type :	PCB Antenna
Antenna Gain :	3.28dBi
Power Supply:	☐ DC 5V ☒ AC IP: 100-240V, 50/60Hz, 16A
Note: for more details, please refer to the User's manual of the EUT.	

1.3. INDEPENDENT OPERATION MODES

The EUT has been tested under its typical operating condition.

The EUT configuration for testing is installed on RF field strength measurement to meet the Commissions requirement and operating in a manner which intends to maximize its emission characteristics in a continuous normal application.

The Transmitter was operated in the normal operating mode. The TX frequency was fixed which was for the purpose of the measurements.

Test of channel included the lowest and middle and highest frequency to perform the test, then record on this report.

Pre-defined engineering program for regulatory testing used to control the EUT for staying in continuous transmitting and receiving mode is programmed.

Frequency and Channel list

Channel List			
Channel No.	Frequency (MHz)	Channel No.	Frequency (MHz)
1	2412		
2	2417		
3	2422	3	2422
4	2427	4	2427
5	2432	5	2432
6	2437	6	2437
7	2442	7	2442
8	2447	8	2447
9	2452	9	2452
10	2457	10	2457
11	2462	11	2462
12	2467		
13	2472		
802.11b/g/n(HT20)		802.11n(HT40)	

2. TEST STANDARDS AND SITES

2.1. DESCRIPTION OF STANDARDS AND RESULTS

The EUT have been tested according to the applicable standards as referenced below.

FCC Part Clause	Test Parameter	Verdict	Remark
15.247(a)(2)	DTS (6dB) Bandwidth	PASS	
15.247(b)(3)	Maximum Peak Conducted Output Power	PASS	
15.247(e)	Maximum Power Spectral Density Level	PASS	
15.247(d)	Unwanted Emission Into Non-Restricted Frequency Bands	PASS	
15.247(d) 15.209	Unwanted Emission Into Restricted Frequency Bands	PASS	
15.247(d); 15.209	Radiated Spurious Emission	PASS	
15.207	Conducted Emission Test	PASS	
15.203	Antenna Application	PASS	

NOTE1: N/A (Not Applicable)
NOTE2: According to FCC KDB 558074 D01 15.247 Meas Guidance v05r02, the report use radiated measurements in the restricted frequency bands. In addition, the radiated test is also performed to ensure the emissions emanating from the device cabinet also comply with the applicable limits.

RELATED SUBMITTAL(S) / GRANT(S):

This submittal(s) (test report) is intended for FCC ID: **2BDE6-DSDEVP16AV3** filing to comply with Section 15.247 of the FCC Part 15, Subpart C Rules.

2.2. LIST OF TEST AND MEASUREMENT INSTRUMENTS

For radiated(9K-30M) emission test(966 Chamber 1)							
Equipment	Manufacturer	Model No.	Serial No.	Last Cal.	Cal. Interval	Lab No.	Remark
EMI Test Receiver	Rohde & Schwarz	ESR 3	101849	Feb. 15, 2023	1 Year	LEP-E006	☑
Active Loop Antenna	Schwarzbeck	FMZB 1519C	00008	Feb. 15, 2023	3 Year	LEP-E068	☑
966 Chamber 1	MR	MR-L02	LEP-E051	Nov. 17, 2022	3 Year	LEP-E051	☑
Test software	EZ-EMC	Fala	EMEC-3A1	N/A	N/A	N/A	☑
For radiated(30M-1G) emission test(966 Chamber 1)							
Equipment	Manufacturer	Model No.	Serial No.	Last Cal.	Cal. Interval	Lab No.	Remark
EMI Test Receiver	Rohde & Schwarz	ESR 3	101849	Feb. 15, 2023	1 Year	LEP-E006	☑
TRILOG Broadband Antenna	Schwarzbeck	VULB 9163	743	Nov. 20, 2022	3 Year	LEP-E005	☑
Signal Amplifier	HP	8447D	1726A01222	Feb. 15, 2023	1 Year	LEP-E007	☑
6dB Attenuator	RswTech	5W 6dB	LEP-E084	Feb. 15, 2023	1 Year	LEP-E084	☑
966 Chamber 1	MR	MR-L02	LEP-E051	Nov. 17, 2022	3 Year	LEP-E051	☑
Test software	EZ-EMC	Fala	EMEC-3A1	N/A	N/A	N/A	☑
For radiated(1-18G) emission test(966 Chamber 1)							
Equipment	Manufacturer	Model No.	Serial No.	Last Cal.	Cal. Interval	Lab No.	Remark
Spectrum analyzer	Rohde & Schwarz	FSV40	101412	Feb. 15, 2023	1 Year	LEP-E076	☑
Spectrum analyzer	Agilent	N9020A	MY49100060	Feb. 15, 2023	1 Year	LEP-E020	☑
Horn antenna	Schwarzbeck	BBHA 9120D	01875	Nov. 20, 2022	3 Year	LEP-E024	☑
Preamplifier	Schwarzbeck	BBN 9718B	00010	Mar. 07, 2020	1 Year	LEP-E025	☑
966 Chamber 1	MR	MR-L02	LEP-E051	Nov. 17, 2022	3 Year	LEP-E051	☑
Test software	EZ-EMC	Fala	EMEC-3A1	N/A	N/A	N/A	☑
For radiated(18-40G) emission test(966 Chamber 1)							
Equipment	Manufacturer	Model No.	Serial No.	Last Cal.	Cal. Interval	Lab No.	Remark
Spectrum analyzer	Rohde & Schwarz	FSV40	101412	Feb. 15, 2023	1 Year	LEP-E076	☑
Horn antenna+Preamplifier	COM-POWER	AH840	10100020	Sep. 05, 2022	3 Year	LEP-E075	☑
966 Chamber 1	MR	MR-L02	LEP-E051	Nov. 17, 2022	3 Year	LEP-E051	☑
Test software	EZ-EMC	Fala	EMEC-3A1	N/A	N/A	N/A	☑
For radiated(30M-1G) emission test(966 Chamber 2)							
Equipment	Manufacturer	Model No.	Serial No.	Last Cal.	Cal. Interval	Lab No.	Remark
EMI Test Receiver	Rohde & Schwarz	ESPI 3	101059	Feb. 15, 2023	1 Year	LEP-E054	☐
TRILOG Broadband Antenna	Schwarzbeck	VULB 9163	743	Nov. 20, 2022	3 Year	LEP-E049	☐
966 Chamber 2	MR	MR-L06	LEP-E052	Nov. 17, 2022	3 Year	LEP-E052	☐
Test software	EZ-EMC	Fala	EMEC-3A1	N/A	N/A	N/A	☐
For RF test							
Equipment	Manufacturer	Model No.	Serial No.	Last Cal.	Cal. Interval	Lab No.	Remark
Spectrum analyzer	Rohde & Schwarz	FSV40	101412	Feb. 15, 2023	1 Year	LEP-E076	☑
Spectrum analyzer	Agilent	N9020A	MY49100060	Feb. 15, 2023	1 Year	LEP-E020	☑
Vector source	Agilent	N5182A	MY47420382	Feb. 15, 2023	1 Year	LEP-E021	☑
Analog signal source	Agilent	N5171B	MY51350292	Feb. 15, 2023	1 Year	LEP-E022	☑
All instrument	Rohde & Schwarz	CMW 500	1201.002K50	Feb. 15, 2023	1 Year	LEP-E019	☑
High and low temperature chamber	Math-mart	MT-1202-40	LEP-E041	Feb. 15, 2023	1 Year	LEP-E041	☑
control unit	Tonscend	JS0806-2	10165	Feb. 15, 2023	1 Year	LEP-E034	☑
Testing software	Tonscend	JSTS1120-3	Ver 2.6.77.0518	N/A	N/A	N/A	☑

2.3. MEASUREMENT UNCERTAINTY

The following measurement uncertainty levels have been estimated for tests performed on the apparatus:

Parameter	Uncertainty
Radio Frequency	±1x10^-5
Maximum Peak Output Power Test	±1.0%
Conducted Emissions Test	±3.08dB
Radiated Emission Test	±4.60dB
Power Density	±0.9%
Occupied Bandwidth Test	±2.3%
Band Edge Test	±1.2%
Antenna Port Emission	±3dB
Temperature	±3.2%
Humidity	±2.5%
Measurement Uncertainty for a level of Confidence of 95%	

2.4. TEST FACILITY

EMC Lab. : The Laboratory has been assessed and proved to be in compliance with CNAS/CL01
The Certificate Registration Number is L10100.
The Laboratory has been assessed and proved to be in compliance with A2LA
The Certificate Registration Number is 6901.01

FCC Designation No.: CN1351
Test Firm Registration No.: 397428

ISED CAB identifier: CN0151
Test Firm Registration No.: 20133

Test Location : Dongguan Lepont Testing Service Co., Ltd.

Address : Room 102, Building 11, No.7, Houjie Science And Technology Avenue, Houjie, Dongguan, Guangdong, China

3. SETUP OF EQUIPMENT UNDER TEST

3.1. RADIO FREQUENCY TEST SETUP 1

The component's antenna ports(s) of the EUT are connected to the measurement instrument per an appropriate attenuator. The EUT is controlled by PC/software to emit the specified signals for the purpose of measurements.

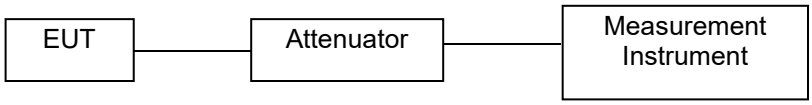

3.2. RADIO FREQUENCY TEST SETUP 2

The test site semi-anechoic chamber has met the requirement of NSA tolerance 4 dB according to the standards: ANSI C63.10. The test distance is 3m.The setup is according to the requirements in Section 13.1.4.1 of ANSI C63.10-2013 and CAN/CSA-CEI/IEC CISPR 32.

Below 30MHz：
The EUT is placed on a turntable 0.8meters above the ground in the chamber, 3 meter away from the antenna (loop antenna). The Antenna should be positioned with its plane vertical at the specified distance from the EUT and rotated about its vertical axis for maximum response at each azimuth about the EUT. The center of the loop shall be 1 m above the ground. For certain applications, the loop antenna plane may also need to be positioned horizontally at the specified distance from the EUT.

Above 30MHz：
The EUT is placed on a turntable 0.8meters above the ground in the chamber, 3 meter away from the antenna. The maximal emission value is acquired by adjusting the antenna height, polarisation and turntable azimuth. Normally, the height range of antenna is 1 m to 4 m, the azimuth range of turntable is 0° to 360°, and the receive antenna has two polarizations Vertical (V) and Horizontal (H).

Above 1GHz:
(Note: the FCC's permission to use 1.5m as an alternative per TCBC Conf call of Dec. 2, 2014.)
The EUT is placed on a turntable 1.5 meters above the ground in the chamber, 3 meter away from the antenna. The maximal emission value is acquired by adjusting the antenna height, polarisation and turntable azimuth. Normally, the height range of antenna is 1 m to 4 m, the azimuth range of turntable is 0° to 360°, and the receive antenna has two polarizations Vertical (V) and Horizontal (H).

(a) Radiated Emission Test Set-Up, Frequency Below 30MHz

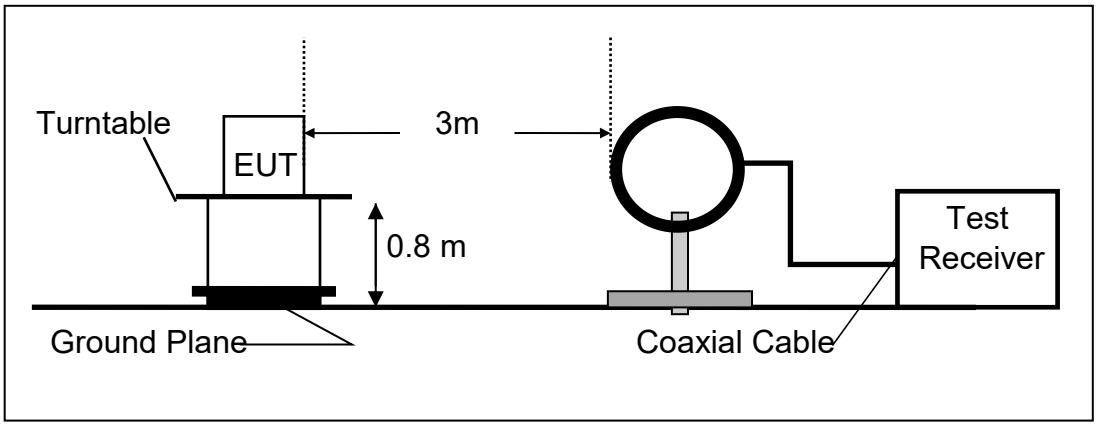

(b) Radiated Emission Test Set-Up, Frequency Below 1000MHz

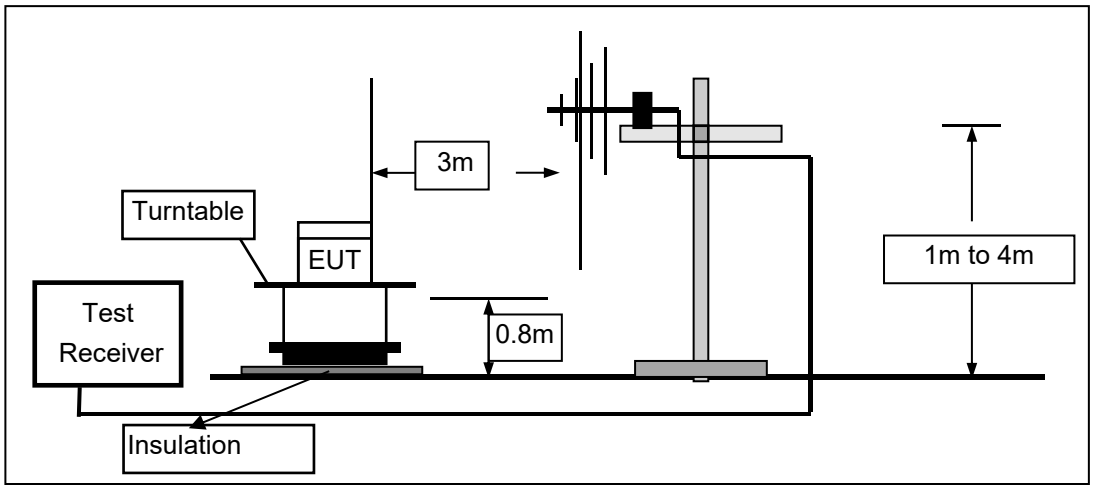

(c) Radiated Emission Test Set-Up, Frequency above 1000MHz

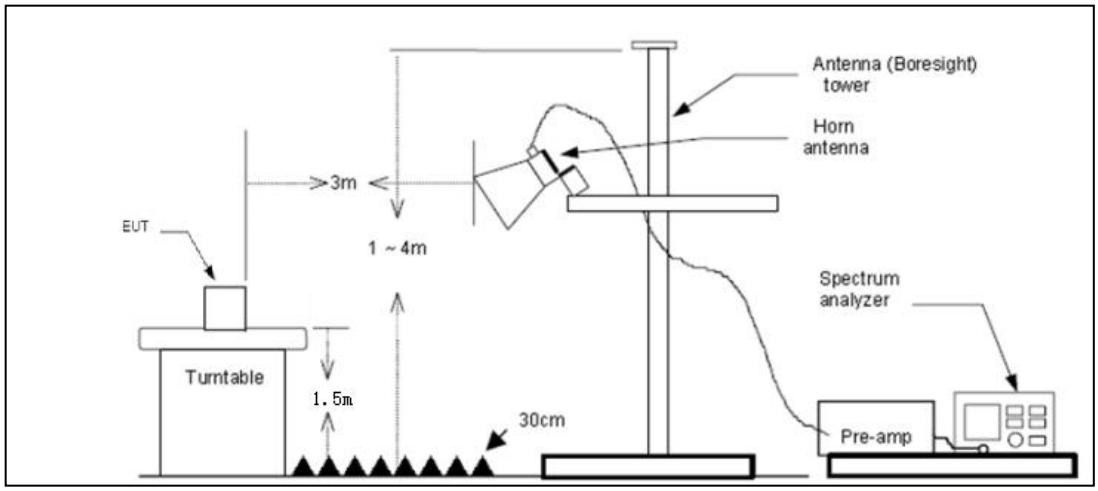

3.3. CONDUCTED EMISSION TEST SETUP

The mains cable of the EUT (Perfect Share Mini) must be connected to LISN. The LISN shall be placed 0.8m from the boundary of EUT and bonded to a ground reference plane for LISN mounted on top of the ground reference plane. This distance is between the closest points of the LISN and the EUT. All other units of the EUT and associated equipment shall be at least 0.8m from the LISN.
Ground connections, where required for safety purposes, shall be connected to the reference ground point of the LISN and, where not otherwise provided or specified by the manufacturer, shall be of same length as the mains cable and run parallel to the mains connection at a separation distance of not more than 0.8m.
According to the requirements in Section 13.1.4.1 of ANSI C63.10-2013 Conducted emissions from the EUT measured in the frequency range between 0.15 MHz and 30 MHz using CISPR Quasi-Peak and average detector mode.

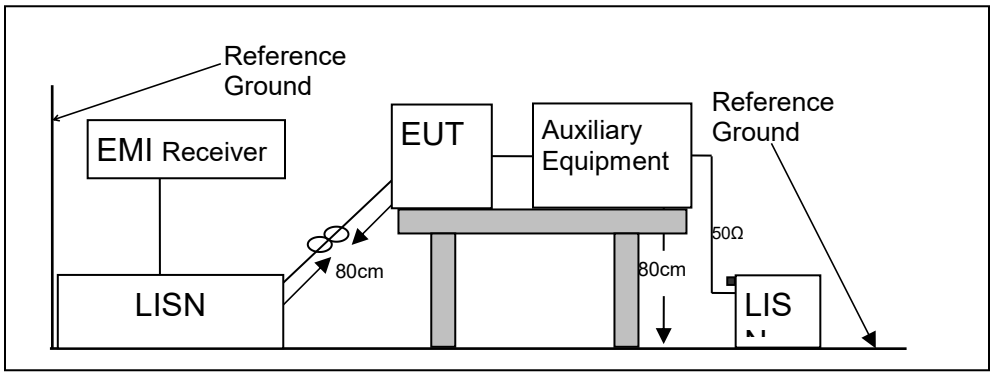

3.4. BLOCK DIAGRAM CONFIGURATION OF TEST SYSTEM

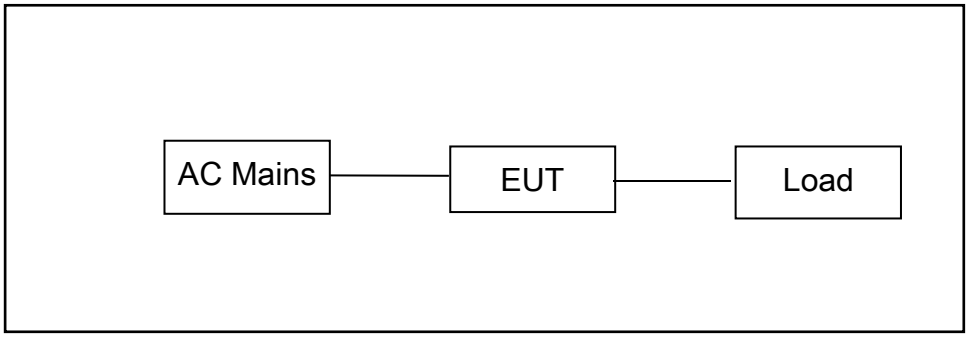

3.5. SUPPORT EQUIPMENT

EUT Cable List and Details			
Cable Description	Length (m)	Shielded/Unshielded	With / Without Ferrite

Auxiliary Cable List and Details			
Cable Description	Length (m)	Shielded/Unshielded	With / Without Ferrite

Auxiliary Equipment List and Details			
Description	Manufacturer	Model	Serial Number
Laptop computer	Lenovo	Xiaoxin Pro IA5HR	PF490VB0
AC Load	/	3000W	/

Notes:

1.All the equipment/cables were placed in the worst-case configuration to maximize the emission during the test.

2.Grounding was established in accordance with the manufacturer's requirements and conditions for the intended use.

4. TEST RESULTS AND MEASUREMENT DATA

4.1. DTS (6DB) BANDWIDTH

4.1.1. Applicable Standard

According to FCC Part 15.247(a)(2) and KDB 558074 D01 15.247 Meas Guidance v05r02

4.1.2. Conformance Limit

The minimum -6 dB bandwidth shall be at least 500 kHz.

4.1.3. Test Configuration

Test according to clause 3.1 radio frequency test setup 1

4.1.4. Test Procedure

The EUT was operating in IEEE 802.11b/g/n mode and controlled its channel. Printed out the test result from the spectrum by hard copy function.
The RF output of EUT was connected to the spectrum analyzer by RF cable and attenuator. The path loss was compensated to the results for each measurement.
Set to the maximum power setting and enable the EUT transmit continuously
Set RBW = 100 kHz.
Set the VBW ≥3xRBW(about 300kHz).
Set Span=2 times OBW
Set Detector = Peak.
Set Trace mode = max hold.
Set Sweep = auto couple.
Allow the trace to stabilize.
Measure the maximum width of the emission that is constrained by the frequencies associated with the two outermost amplitude points (upper and lower frequencies) that are attenuated by 6 dB relative to the maximum level measured in the fundamental emission.
Measure and record the results in the test report.

Test Results:

Operation Mode	Channel Number	Channel Frequency (MHz)	Measurement Bandwidth (MHz)	Limit (kHz)	Verdict
802.11b	1	2412	9.546	>500	PASS
	7	2442	9.537	>500	PASS
	13	2472	9.540	>500	PASS
802.11g	1	2412	16.49	>500	PASS
	7	2442	16.49	>500	PASS
	13	2472	16.49	>500	PASS
802.11n (HT20)	1	2412	17.12	>500	PASS
	7	2442	17.12	>500	PASS
	13	2472	17.12	>500	PASS
802.11n (HT40)	3	2422	33.80	>500	PASS
	7	2442	33.56	>500	PASS
	11	2462	33.56	>500	PASS

Test Model	DTS (6dB) Bandwidth
	802.11b
	Channel 1: 2412MHz

Test Model	DTS (6dB) Bandwidth
	802.11b
	Channel 7: 2442MHz

Test Model	DTS (6dB) Bandwidth
	802.11b
	Channel 13: 2472MHz

Test Model	DTS (6dB) Bandwidth
	802.11g
	Channel 1: 2412MHz

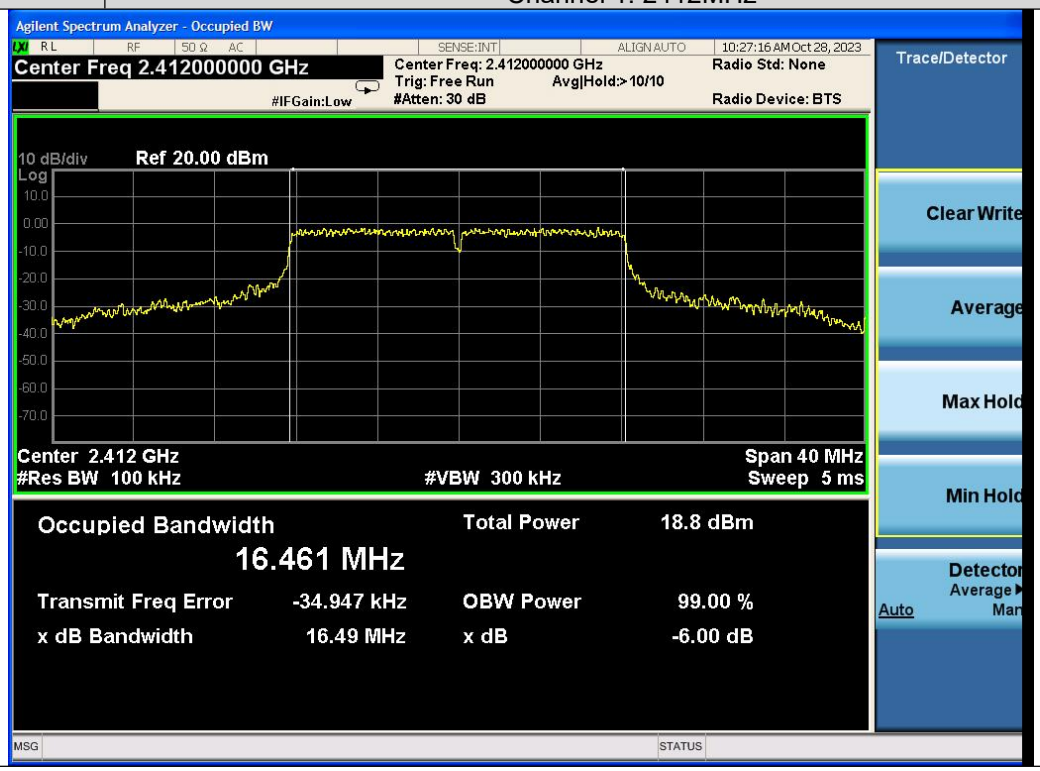

Test Model	DTS (6dB) Bandwidth
	802.11g
	Channel 7: 2442MHz

Test Model	DTS (6dB) Bandwidth
	802.11g
	Channel 13: 2472MHz

Test Model	DTS (6dB) Bandwidth
	802.11n (HT20)
	Channel 1: 2412MHz

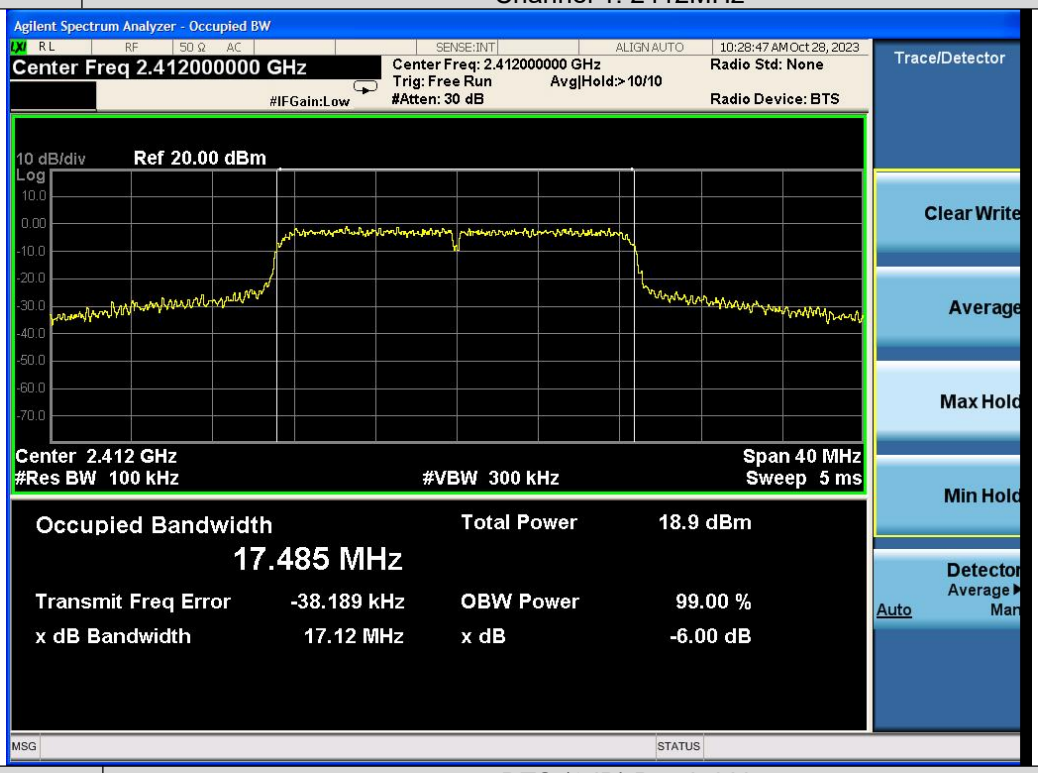

Test Model	DTS (6dB) Bandwidth
	802.11n (HT20)
	Channel 7: 2442MHz

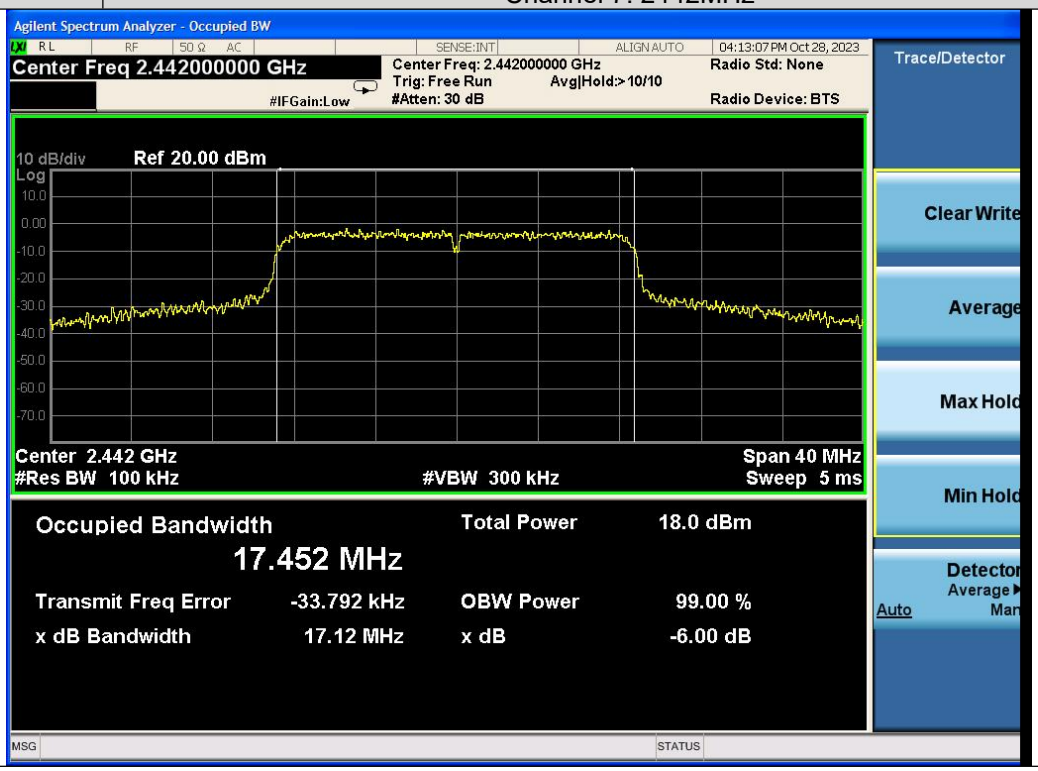

Test Model	DTS (6dB) Bandwidth
	802.11n (HT20)
	Channel 13: 2472MHz

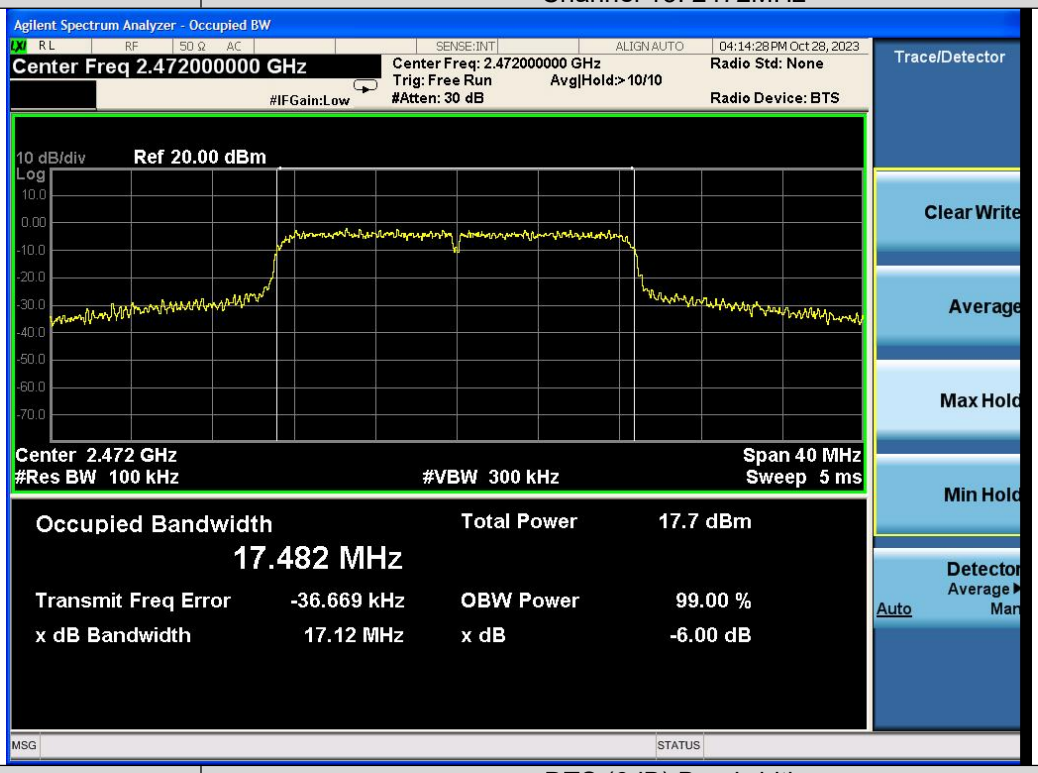

Test Model	DTS (6dB) Bandwidth
	802.11n (HT40)
	Channel 3: 2422MHz

Test Model	DTS (6dB) Bandwidth
	802.11n (HT40)
	Channel 7: 2442MHz

Test Model	DTS (6dB) Bandwidth
	802.11n (HT40)
	Channel 11: 2462MHz

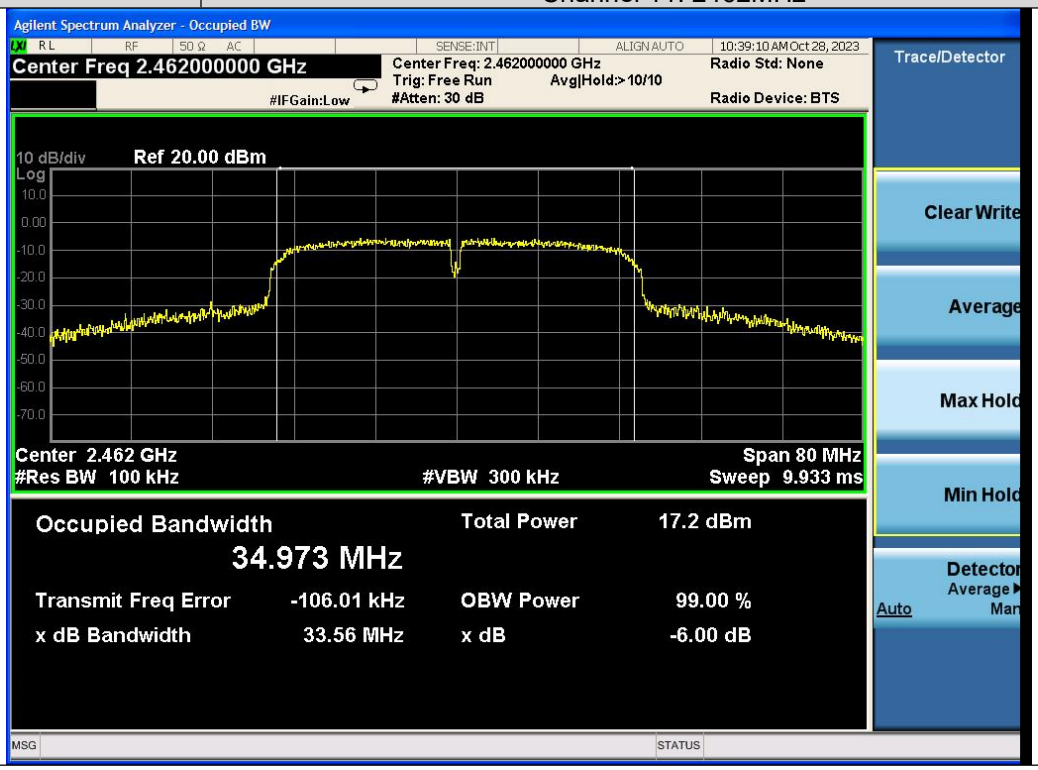

4.2. MAXIMUM PEAK CONDUCTED OUTPUT POWER

4.2.1. Applicable Standard

According to FCC Part 15.247(b)(1) and KDB 558074 D01 15.247 Meas Guidance v05r02

4.2.2. Conformance Limit

The maximum conducted output power of the intentional radiator for systems using digital modulation in the 2400 - 2483.5 MHz bands shall not exceed: 1 Watt (30dBm).

4.2.3. Test Configuration

Test according to clause 4.2.4 radio frequency test setup 1

4.2.4. Test Procedure

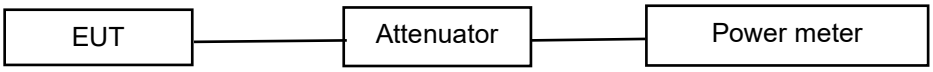

■ **According to FCC Part15.247(b)(3)**

As an alternative to a peak power measurement, compliance with the one Watt limit can be based on a measurement of the maximum conducted output power. Maximum Conducted Output Power is defined as the total transmit power delivered to all antennas and antenna elements averaged across all symbols in the signaling alphabet when the transmitter is operating at its maximum power control level. Power must be summed across all antennas and antenna elements. The average must not include any time intervals during which the transmitter is off or is transmitting at a reduced power level. If multiple modes of operation are possible (e.g., alternative modulation methods), the *maximum conducted output power* is the highest total transmit power occurring in any mode.

Set the RBW ≧DTS bandwidth(about 1MHz).
Set VBW =3*RBW(about 3MHz)
Set the span ≧3*RBW
Set Sweep time = auto couple.
Set Detector = peak.
Set Trace mode = max hold.
Allow trace to fully stabilize.
Use peak marker function to determine the peak amplitude level.

■ **According to FCC Part 15.247(b)(4):**

The conducted output power limit specified in paragraph (b) of this section is based on the use of antennas with directional gains that do not exceed 6 dBi. Except as shown in paragraph (c) of this section, if transmitting antennas of directional gain greater than 6 dBi are used, the conducted output power from the intentional radiator shall be reduced below the stated values in (b)(3) of this section, as appropriate, by the amount in dB that the directional gain of the antenna exceeds 6 dBi.

■ Place the EUT on the desktop and set it to launch mode. Remove the antenna from the EUT and connect the low-loss RF cable from the antenna port to the power meter. Measure the peak power of each channel.

Test Results

Operation Mode	Channel Number	Channel Frequency (MHz)	Measurement Level (dBm)	Limit (dBm)	Verdict
802.11b	1	2412	14.460	30	PASS
	7	2442	14.258	30	PASS
	13	2472	14.091	30	PASS
802.11g	1	2412	10.121	30	PASS
	7	2442	9.165	30	PASS
	13	2472	8.815	30	PASS
802.11n (HT20)	1	2412	9.948	30	PASS
	7	2442	9.162	30	PASS
	13	2472	8.750	30	PASS
802.11n (HT40)	3	2422	7.177	30	PASS
	7	2442	6.856	30	PASS
	11	2462	6.774	30	PASS

4.3. MAXIMUM POWER SPECTRAL DENSITY

4.3.1. Applicable Standard

According to FCC Part15.247(e) and KDB 558074 D01 15.247 Meas Guidance v05r02

4.3.2. Conformance Limit

The transmitter power spectral density conducted from the transmitter to the antenna shall not be greater than 8 dBm in any 3 kHz band during any time interval of continuous transmission.

4.3.3. Test Configuration

Test according to clause 3.1 radio frequency test setup 1

4.3.4. Test Procedure

This procedure shall be used if maximum peak conducted output power was used to demonstrate compliance
The transmitter output (antenna port) was connected to the spectrum analyzer
Set analyzer center frequency to DTS channel center frequency.
Set the span to 1.5 times the DTS bandwidth.
Set the RBW to: 3 kHz
Set the VBW to:10 kHz.
Set Detector =Peak.
Set Sweep time = auto couple.
Set Trace mode = max hold.
Allow trace to fully stabilize.
Use the peak marker function to determine the maximum amplitude level within the RBW.
Note: If antenna Gain exceeds 6 dBi, then PSD Limit=8-(Gain- 6)

Operation Mode	Channel Number	Channel Frequency (MHz)	Measurement Level (dBm/3kHz)	Limit (dBm/3kHz)	Verdict
802.11b	1	2412	-9.412	8	PASS
	7	2442	-9.069	8	PASS
	13	2472	-9.251	8	PASS
802.11g	1	2412	-15.670	8	PASS
	7	2442	-16.127	8	PASS
	13	2472	-16.269	8	PASS
802.11n (HT20)	1	2412	-15.069	8	PASS
	7	2442	-15.502	8	PASS
	13	2472	-16.032	8	PASS
802.11n (HT40)	3	2422	-16.149	8	PASS
	7	2442	-16.837	8	PASS
	11	2462	-16.628	8	PASS

Test Model	Power Spectral Density
	802.11b
	Channel 1: 2412MHz

Test Model	Power Spectral Density
	802.11b
	Channel 7: 2442MHz

Test Model	Power Spectral Density
	802.11b
	Channel 13: 2472MHz

Test Model	Power Spectral Density
	802.11g
	Channel 1: 2412MHz

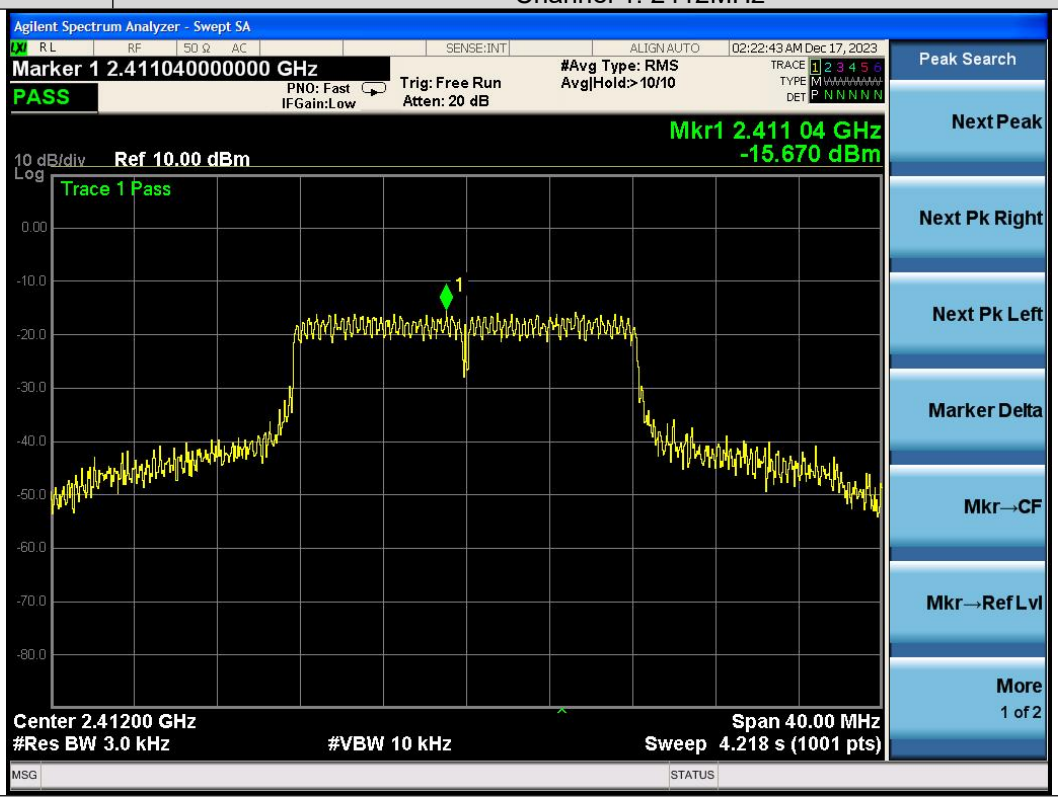

Test Model	Power Spectral Density
	802.11g
	Channel 7: 2442MHz

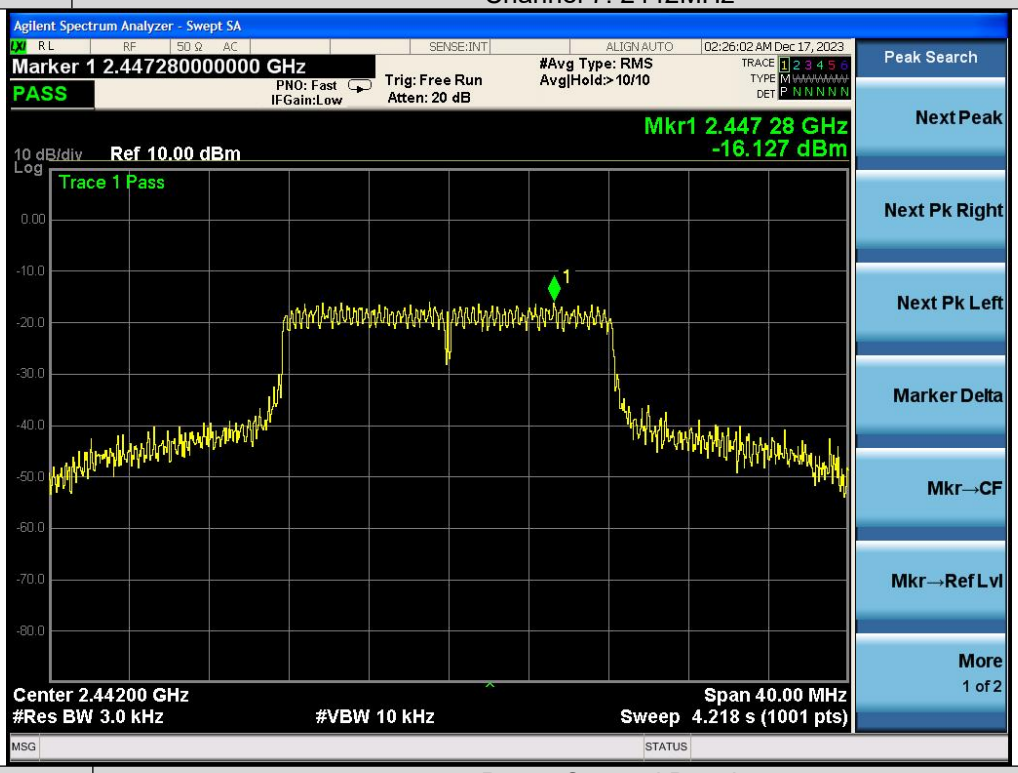

Test Model	Power Spectral Density
	802.11g
	Channel 13: 2472MHz

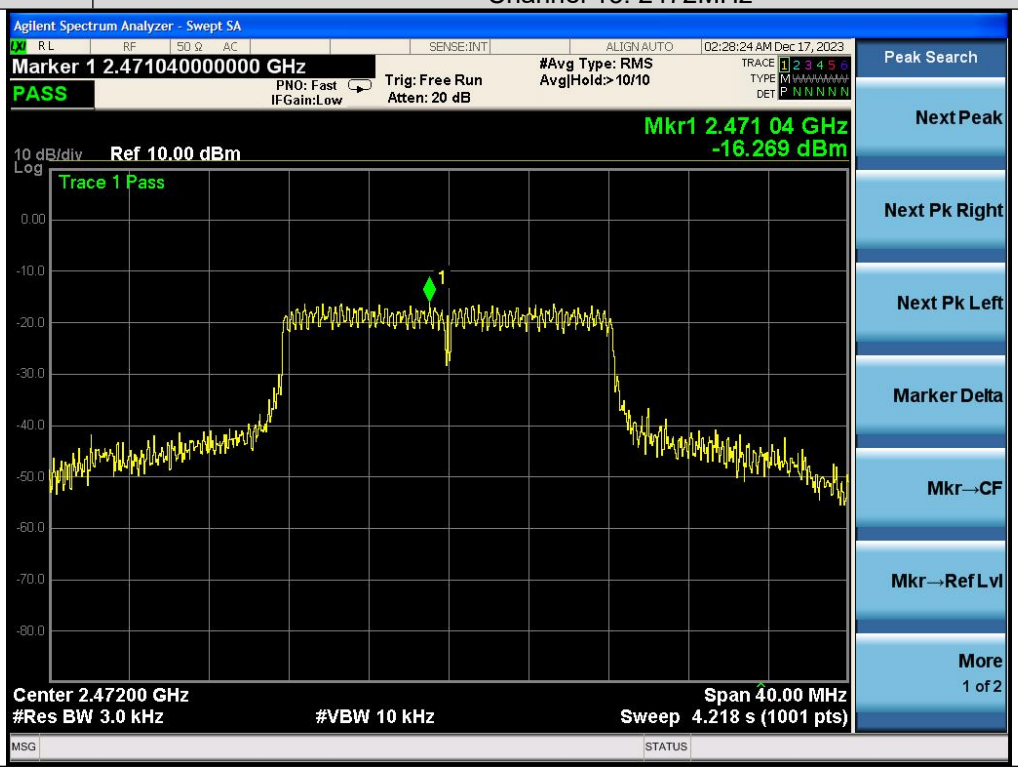

Test Model	Power Spectral Density
	802.11n (HT20)
	Channel 1: 2412MHz

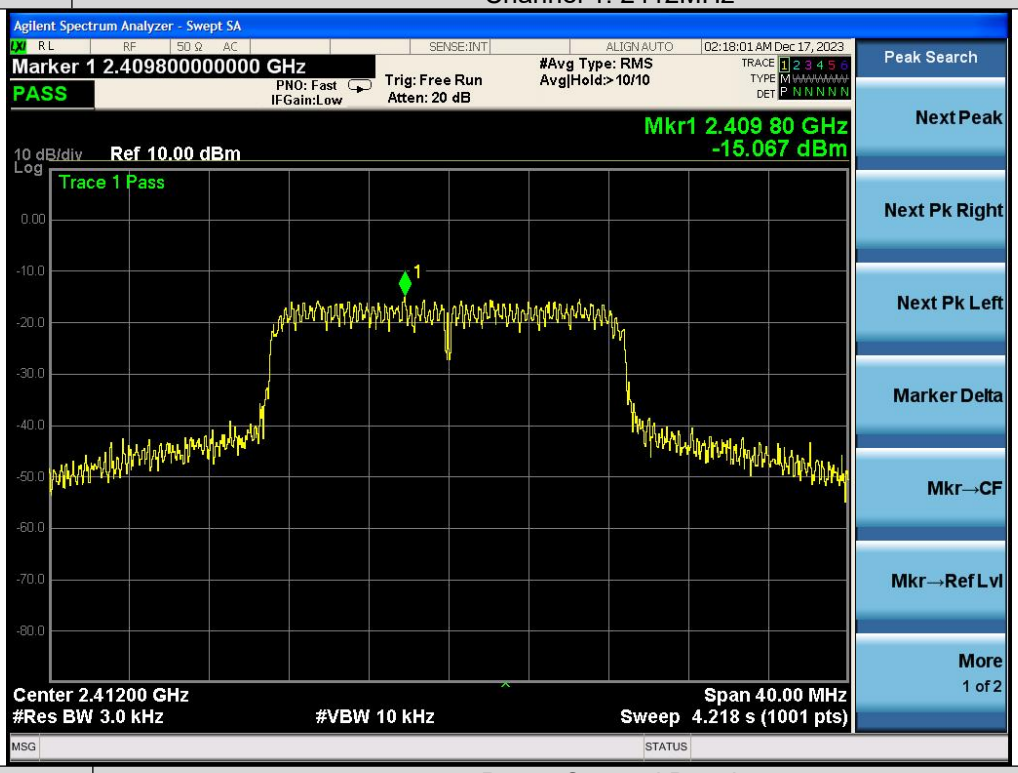

Test Model	Power Spectral Density
	802.11n (HT20)
	Channel 7: 2442MHz

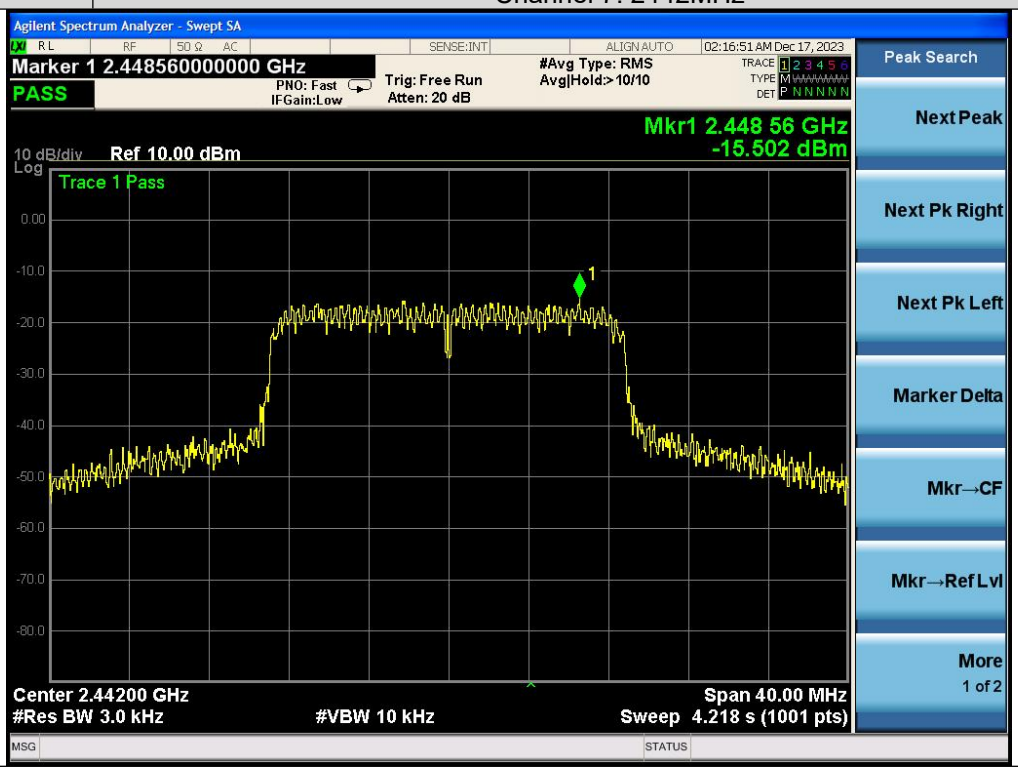

Test Model	Power Spectral Density
	802.11n (HT20)
	Channel 13: 2472MHz

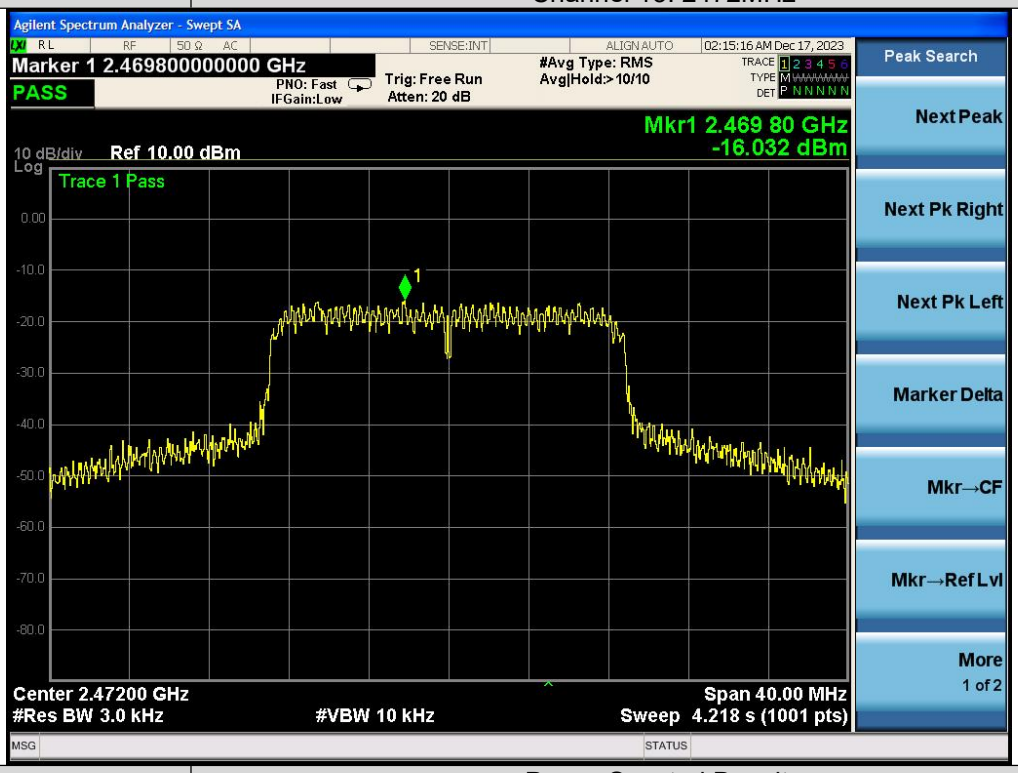

Test Model	Power Spectral Density
	802.11n (HT40)
	Channel 3: 2422MHz

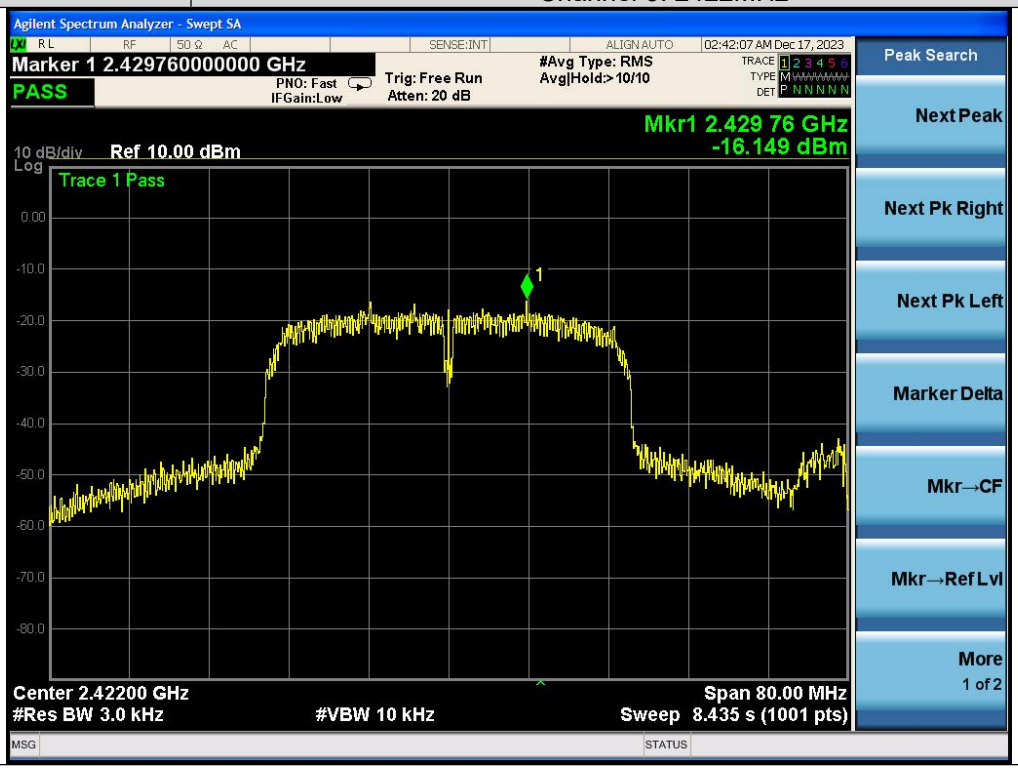

Test Model	Power Spectral Density
	802.11n (HT40)
	Channel 7: 2442MHz

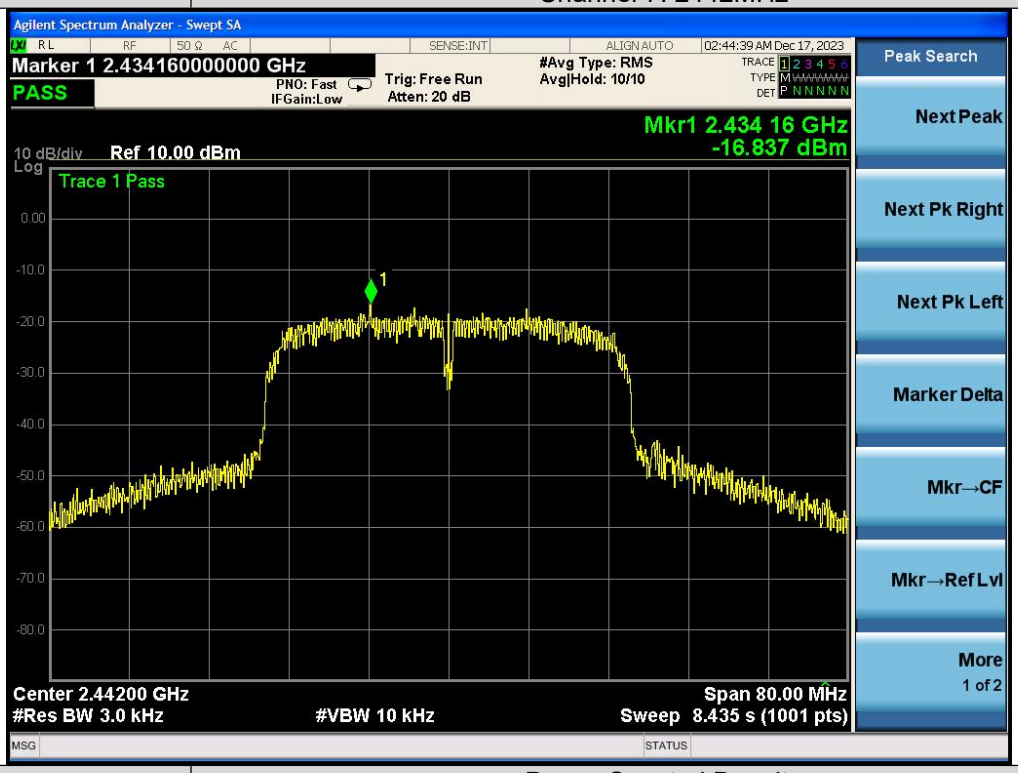
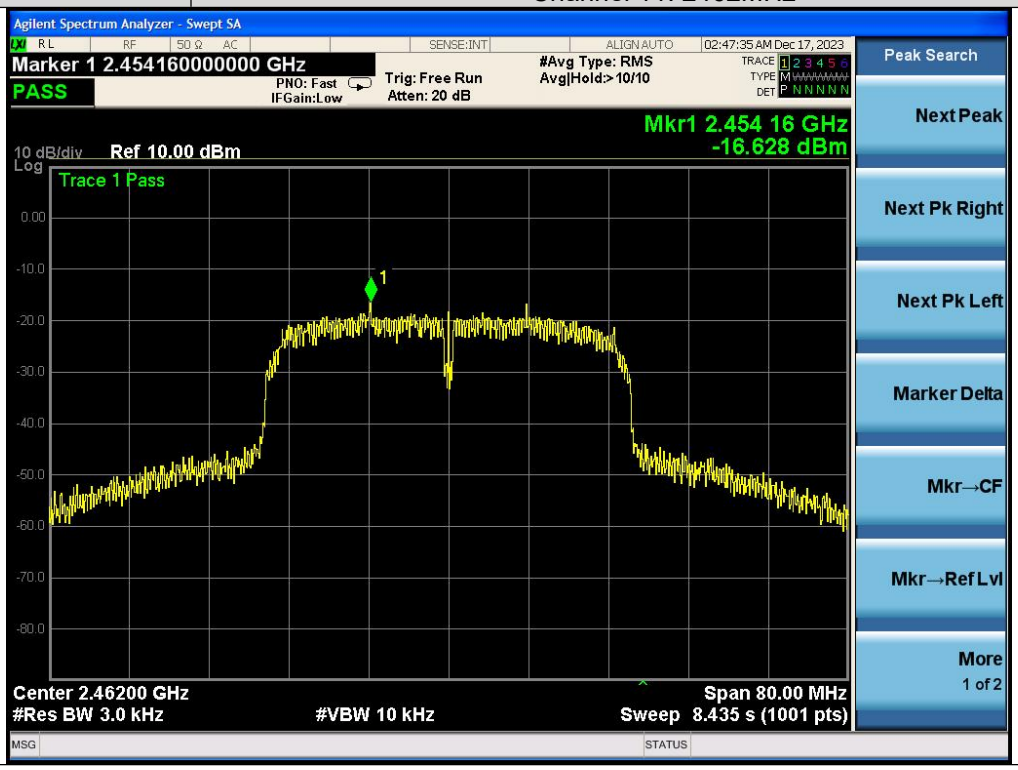
Test Model	Power Spectral Density
	802.11n (HT40)
	Channel 11: 2462MHz