Test Report

Product: Wireless multi-mode keyboard

Trade Mark: Koorui

Model Number: BKM01

FCC ID: 2BDET-BKM01

Prepared for

HONG KONG KOY TECHNOLOGY TRADING COMPANY LIMITED

HONG KONG WAN CHAI FLAT 1512, 15/F. LUCKY CENTRE NO.165-171 WAN CHAI ROAD, HONG KONG, China

Prepared by

Shenzhen HongBiao Certification& Testing Co., Ltd

Room 102, 201, Building 2, Yuanwanggu RFID Industrial Park, Tongguan Road, Tianliao Community, Yutang Street, Guangming District, Shenzhen, China

Tel.: +86-755-2998 9321 Fax.: +86-755-2998 5110

Website: http://www.sz-hongbiao.com

Table of Contents

1 GENERAL DESCRIPTION 5

1.1 DESCRIPTION OF EUT 5
1.2 TEST MODE 5
1.3 OPERATION CHANNEL LIST 5
1.4 TEST SETUP 6
1.5 ANCILLARY EQUIPMENT 6

2 SUMMARY OF TEST RESULT 7

3 TEST FACILITIES AND ACCREDITATIONS 8

3.1 TEST LABORATORY 8
3.2 ENVIRONMENTAL CONDITIONS 8
3.3 MEASUREMENT UNCERTAINTY 8
3.4 TEST SOFTWARE 8

4 LIST OF TEST EQUIPMENT 9

5 TEST ITEM AND RESULTS 11

5.1 ANTENNA REQUIREMENT 11
5.1.1 Standard Requirement 11
5.1.2 Test Result 11
5.2 CONDUCTED EMISSION 12
5.2.1 Limits 12
5.2.2 Test Procedures 12
5.2.3 Test Setup 13
5.2.4 Test Result 13
5.3 RADIATED EMISSION 16
5.3.1 Limits 16
5.3.2 Test Procedures 16
5.3.3 Test Setup 17
5.3.4 Test Result 18
5.3.5 Band edge–Field strength of fundamental 21
5.3.6 Band edge-radiated 23
5.4 20DB AND 99% BANDWIDTH 27
5.4.1 Limit 27
5.4.2 Test Procedure 27
5.4.3 Test Setup 27
5.4.4 Test Results 27

6 PHOTOGRAPHS OF THE TEST SETUP 29

7 PHOTOGRAPHS OF THE EUT 30

TEST RESULT CERTIFICATION

Applicant's Name..... :	HONG KONG KOY TECHNOLOGY TRADING COMPANY LIMITED
Address ..... :	HONG KONG WAN CHAI FLAT 1512, 15/F. LUCKY CENTRE NO.165-171 WAN CHAI ROAD, HONG KONG, China
Manufacturer's Name ..... :	HONG KONG KOY TECHNOLOGY TRADING COMPANY LIMITED
Address ..... :	HONG KONG WAN CHAI FLAT 1512, 15/F. LUCKY CENTRE NO.165-171 WAN CHAI ROAD, HONG KONG, China

Product description

Product name ..... :	Wireless multi-mode keyboard
Model Number ..... :	BKM01
Standards..... :	FCC Part 15.249
Test procedure..... :	IEEE/ANSI C63.10-2020

This device described above has been tested by Shenzhen HongBiao Certification& Testing Co., Ltd and the test results show that the equipment under test (EUT) is in compliance with the EMC requirements. And it is applicable only to the tested sample identified in the report.

Date of Test

Date (s) of performance of tests..... :	October 09, 2023 ~ November 09, 2023
Test Result..... :	**Pass**

Testing Engineer : Zoe Su

(Zoe Su)

Technical Manager : Gary Lu

(Gary Lu)

Authorized Signatory : Leo Su

(Leo Su)

Revision History

Revised No.	Date of Issue	Description
01	November 09, 2023	Original

1 General Description

1.1 Description of EUT

Product name:	Wireless multi-mode keyboard
Model name:	BKM01
Series Model:	/
Different of series model:	N/A
Operation frequency:	2403 - 2480 MHz
Modulation type:	GFSK
Bit Rate of transmitter:	2 Mbps
Antenna type:	PCB Antenna
Antenna gain:	-0.61dBi
Hardware version:	117-000505 V1.0_2023.08.26
Software version:	C/S:DCA2E8
Battery:	DC 3.7V/300mAh
Power supply:	DC 3.7V by battery, USB 5V charging
Adapter information:	N/A

1.2 Test Mode

Test Mode	Channel	Frequency (MHz)
1	Low	2403
2	Middle	2441
3	High	2480

1.3 Operation Channel list

Channel No.	Frequency (MHz)	Channel No.	Frequency (MHz)	Channel No.	Frequency (MHz)	Channel No.	Frequency (MHz)
01	2403	05	2422	09	2441	13	2463
02	2407	06	2426	10	2445	14	2466
03	2414	07	2436	11	2453	15	2473
04	2419	08	2439	12	2459	16	2480

1.4 Test Setup

See photographs of the test setup in the report for the actual setup and connections between EUT and support equipment.

1.5 Ancillary Equipment

Equipment	Model	S/N	Manufacturer
Adapter	TS-C137	/	PISEN

Equipment	Length (cm)	Shielded/Unshielded	With/Without Ferrite
USB Cable	100	Unshielded	Without Ferrite

2 Summary of Test Result

No.	Standard Section	Test Item	Result	Remark
1	FCC Part15.203	Antenna Requirement	Pass	
2	FCC Part15.207	AC power line conducted emission	Pass	
3	FCC Part15.249(d)	Radiated spurious emission	Pass	
4	FCC Part 15.215	20dB and 99% Bandwidth	Pass	

3 Test Facilities and Accreditations

3.1 Test Laboratory

Test Site	Shenzhen HongBiao Certification& Testing Co., Ltd
Test Site Location	Room 102, 201, Building 2, Yuanwanggu RFID Industrial Park, Tongguan Road, Tianliao Community, Yutang Street, Guangming District, Shenzhen, China
Telephone:	(86-755) 2998 9321
Fax:	(86-755) 2998 5110
FCC Registration No.:	CN1341
A2LA Certificate No.:	6765.01

3.2 Environmental Conditions

During the measurement the environmental conditions were within the listed ranges:

Temperature:	15ºC~35ºC
Relative Humidity:	20%~75%
Air Pressure:	98kPa~101kPa

3.3 Measurement Uncertainty

The reported uncertainty of measurement y ± U, where expended uncertainty U is based on a standard uncertainty multiplied by a coverage factor of k=2, providing a level of confidence of approximately 95 %.

Measurement Frequency Range	U，(dB)	Note
RF frequency	$2x\ 10^{-5}$	
RF power, conducted	± 0.57 dB	
Conducted emission(150kHz~30MHz)	± 2.5 dB	
Radiated emission(30MHz~1GHz)	± 4.2 dB	
Radiated emission (above 1GHz)	± 4.7 dB	
Temperature	±1 degree	
Humidity	± 5 %	

3.4 Test Software

Software name	Manufacturer	Model	Version
EMI Measurement	Farad	EZ-EMC	V1.1.4.2
Conducted test system	MWRF-test	MTS 8310	V2.0.0

4 List of Test Equipment

Radiation emission							
Item	Equipment No.	Equipment name	Manufacturer	Model	Serial No.	Calibration date	Due date
1	HB-E001	Horn Antenna	Schwarzbeck	BBHA 9120D	02592	2022-04-02	2024-04-01
2	HB-E002	Biconical log-periodic composite antenna	Schwarzbeck	VULB 9168	01340	2022-04-06	2024-04-05
3	HB-E003	SHF-EHF Horn	Schwarzbeck	BBHA 91270	01193	2022-04-02	2024-04-01
4	HB-E004	Preamplifier	Noyetec	LAN-0910	NYCM1420101	2023-05-11	2024-05-10
5	HB-E005	Preamplifier	Noyetec	LAN-0118	NYCM1420102	2023-05-12	2024-05-11
6	HB-E006	Preamplifier	Noyetec	LAN-1840	NYCM1420103	2023-06-11	2024-06-10
7	HB-E007	EMI TEST RECEIVER	R&S	ESR7	102520	2023-05-12	2024-05-11
8	HB-E009	POSITINAL COTROLLER	Noyetec	N/A	N/A	/	/
9	HB-E013	RF switch	Noyetec	NY-RF4	NY0CM1420204	/	/
10	HB-E066	Illuminance Tester	TASI	TA8121	N/A	2023-05-11	2024-05-10
11	HB-E075	Active loop antenna	Schwarzbeck	FMZB 1519B	1519B-245	2022-07-24	2024-07-23
Conduction emission							
Item	Equipment No.	Equipment name	Manufacturer	Model	Serial No.	Calibration date	Due date
1	HB-E014	4 Path V-LISN	Schwarzbeck	NNLK 8121	00770	2023-05-12	2024-05-11
2	HB-E015	Pulse Limiter	Schwarzbeck	VTSD 9561-F	00949	2023-05-12	2024-05-11
3	HB-E016	ZN23201	Noyetec	ZN23201	N/A	2023-05-11	2024-05-10
4	HB-E059	Attenuator	Xianghua	TS2-6-1	220215166	2023-05-12	2024-05-11
5	HB-E069	EMI TEST RECEIVER	R&S	ESCI	N/A	2023-05-12	2024-05-11

RF							
Item	Equipment No.	Equipment name	Manufacturer	Model	Serial No.	Calibration date	Due date
1	HB-E041	MXG Anaiog Signal Generator	Agilent	N5181A	MY47070421	2023-05-11	2024-05-10
2	HB-E042	WIDEBAND RADIO COMMUNICA	R&S	CMW500	132108	2023-05-11	2024-05-10

		TION TESTER					
3	HB-E043	MXG Anaiog Signal Generator	Agilent	N5182A	US46240335	2023-05-11	2024-05-10
4	HB-E044	Signal& spectrum Analyzer	R&S	FSV3044	101264	2023-05-11	2024-05-10
5	HB-E045	RF Control Box	Noyetec	NY100-R FCB	N/A	/	/
6	HB-E058	Thermometer Clock Humidity Monitor	N/A	HTC-1	N/A	/	/
7	HB-E077	PXA Signal Analyzer	Agilent	N9030A	N/A	2023-05-11	2024-05-10

Note: the calibration interval of the above test instruments is 12&24 months and the calibrations are traceable to international system unit (SI).

5 Test Item And Results

5.1 Antenna Requirement

5.1.1 Standard Requirement

15.203 requirement: For intentional device, according to 15.203: an intentional radiator shall be designed to ensure that no antenna other than that furnished by the responsible party shall be used with the device

5.1.2 Test Result

The antenna is an PCB antenna, which was permanently affixed to the device and un-replaced, complies with 15.203. In addition, the maximum antenna gain is -0.61dBi.

5.2 Conducted Emission

5.2.1 Limits

Limits – Class B		
Frequency (MHz)	Limit (dBμV)	
	Quasi-Peak	Average
0.15 to 0.5	66 to 56*	56 to 46*
0.5 to 5	56	46
5 to 30	60	50

Note:
1. the tighter limit applies at the band edges.
2. the limit of " * " marked band means the limitation decreases linearly with the logarithm of the frequency in the range.

5.2.2 Test Procedures

a) EUT Operating Conditions

The EUT was configured for testing in a typical fashion (as a customer would normally use it). The EUT has been programmed to continuously transmit during test. This operating condition was tested and used to collect the included data.

b) The following table is the setting of the receiver

Receiver Parameters	Setting
Attenuation	10 dB
Start Frequency	0.15 MHz
Stop Frequency	30 MHz
IF Bandwidth	9 kHz

c) The EUT was placed 0.8 meters from the horizontal ground plane with EUT being connected to the power mains through a line impedance stabilization network (LISN). All other support equipment powered from additional LISN(s). The LISN provide 50 Ohm/ 50uH of coupling impedance for the measuring instrument.

d) Interconnecting cables that hang closer than 40 cm to the ground plane shall be folded back and forth in the center forming a bundle 30 to 40 cm long.

e) I/O cables that are not connected to a peripheral shall be bundled in the center. The end of the cable may be terminated, if required, using the correct terminating impedance. The overall length shall not exceed 1 m.

f) LISN is at least 80 cm from nearest part of EUT chassis.

g) For the actual test configuration, please refer to the related Item – photographs of the test setup.

5.2.3 Test Setup

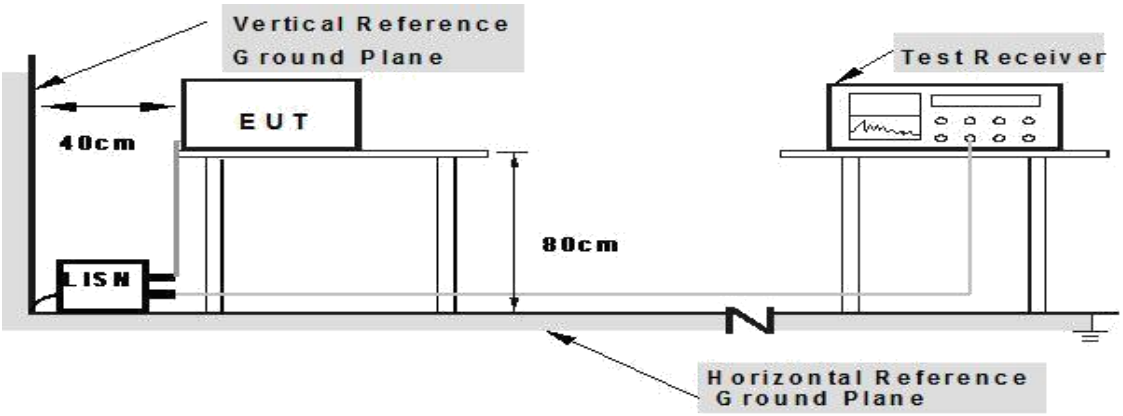

5.2.4 Test Result

EUT:	Wireless multi-mode keyboard	Model Name:	BKM01
Test Mode:	Charging+TX	Phase :	L
Test Voltage:	AC 120V/60Hz		

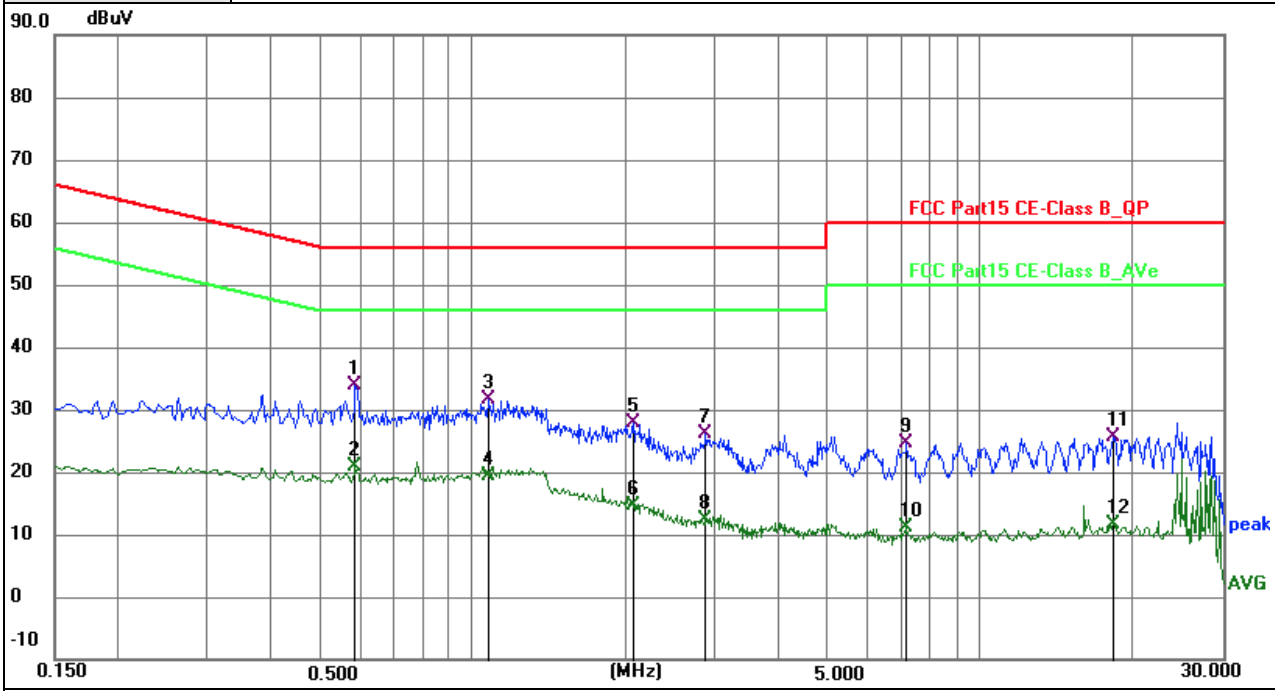

No.	Frequency (MHz)	Reading (dBuV)	Factor (dB)	Level (dBuV)	Limit (dBuV)	Margin (dB)	Detector	P/F	Remark
1 *	0.5865	24.00	9.95	33.95	56.00	-22.05	QP	P	
2	0.5865	11.03	9.95	20.98	46.00	-25.02	AVG	P	
3	1.0725	21.74	9.99	31.73	56.00	-24.27	QP	P	
4	1.0725	9.47	9.99	19.46	46.00	-26.54	AVG	P	
5	2.0670	17.87	10.06	27.93	56.00	-28.07	QP	P	
6	2.0670	4.48	10.06	14.54	46.00	-31.46	AVG	P	
7	2.8815	15.98	10.11	26.09	56.00	-29.91	QP	P	
8	2.8815	2.26	10.11	12.37	46.00	-33.63	AVG	P	
9	7.1430	14.34	10.25	24.59	60.00	-35.41	QP	P	
10	7.1430	0.88	10.25	11.13	50.00	-38.87	AVG	P	
11	18.2895	15.11	10.44	25.55	60.00	-34.45	QP	P	
12	18.2895	1.27	10.44	11.71	50.00	-38.29	AVG	P	

Notes:
1.An initial pre-scan was performed on the line and neutral lines with peak detector.
2.Quasi-Peak and Average measurement were performed at the frequencies with maximized peak emission.
3.Mesurement Level = Reading level + Correct Factor
4.All test modes were pre-tested, but we only recorded the worst case in this report.

EUT：	Wireless multi-mode keyboard	Model Name:	BKM01
Test Mode：	Charging+TX	Phase :	N
Test Voltage:	AC 120V/60Hz		

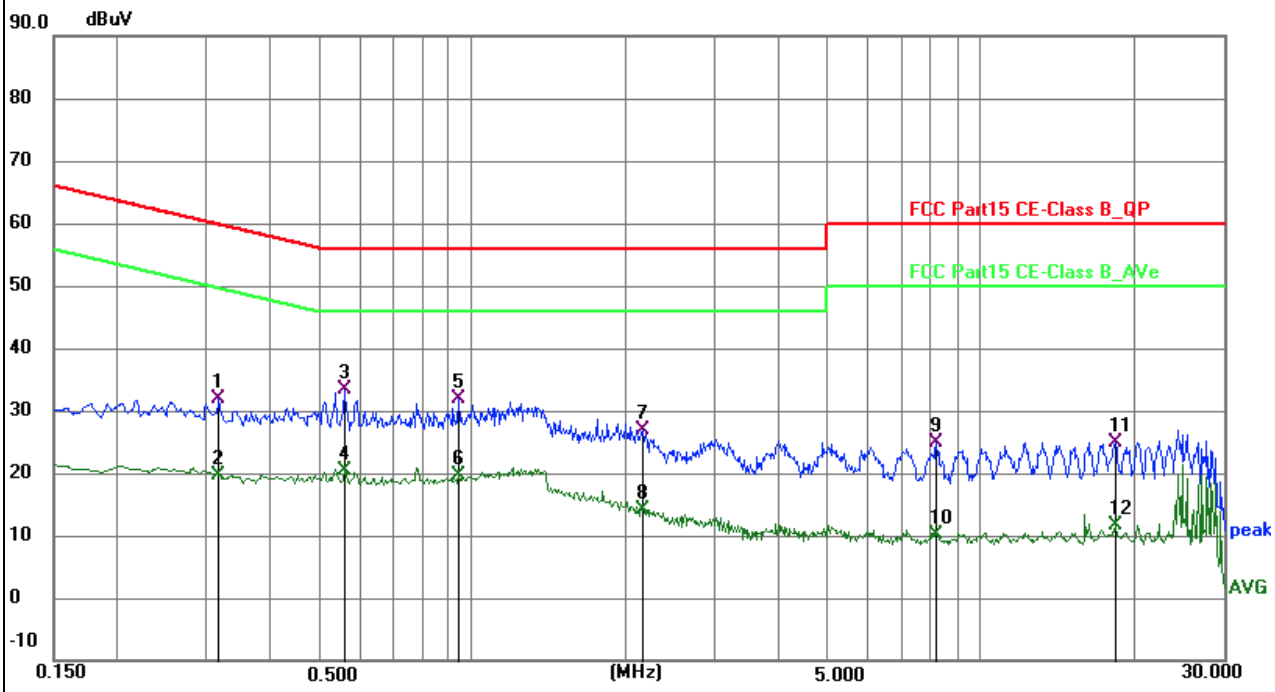

No.	Frequency (MHz)	Reading (dBuV)	Factor (dB)	Level (dBuV)	Limit (dBuV)	Margin (dB)	Detector	P/F	Remark
1	0.3165	22.21	9.58	31.79	59.80	-28.01	QP	P	
2	0.3165	10.10	9.58	19.68	49.80	-30.12	AVG	P	
3 *	0.5595	23.51	9.80	33.31	56.00	-22.69	QP	P	
4	0.5595	10.49	9.80	20.29	46.00	-25.71	AVG	P	
5	0.9420	22.22	9.63	31.85	56.00	-24.15	QP	P	
6	0.9420	9.98	9.63	19.61	46.00	-26.39	AVG	P	
7	2.1660	16.75	10.06	26.81	56.00	-29.19	QP	P	
8	2.1660	4.01	10.06	14.07	46.00	-31.93	AVG	P	
9	8.1645	14.61	10.25	24.86	60.00	-35.14	QP	P	
10	8.1645	-0.14	10.25	10.11	50.00	-39.89	AVG	P	
11	18.3345	14.73	10.26	24.99	60.00	-35.01	QP	P	
12	18.3345	1.42	10.26	11.68	50.00	-38.32	AVG	P	

Notes:
1.An initial pre-scan was performed on the line and neutral lines with peak detector.
2.Quasi-Peak and Average measurement were performed at the frequencies with maximized peak emission.
3.Mesurement Level = Reading level + Correct Factor
4.All test modes were pre-tested, but we only recorded the worst case in this report.

5.3 Radiated Emission

5.3.1 Limits

Emissions radiated outside of the specified frequency bands, except for harmonics, shall be attenuated by at least 50 dB below the level of the fundamental or to the general radiated emission limits in §15.209, whichever is the lesser attenuation.

According to FCC section 15.209 (a), except as provided elsewhere in this subpart, the emissions from an intentional radiator shall not exceed the field strength levels specified in the following table:

Frequencies (MHz)	Field Strength (micorvolts/meter)	Measurement Distance (meters)
0.009~0.490	2400/F(KHz)	300
0.490~1.705	24000/F(KHz)	30
1.705~30.0	30	30
30~88	100	3
88~216	150	3
216~960	200	3
Above 960	500	3

Receiver Parameter	Setting
Attenuation	Auto
Start ~ Stop Frequency	9kHz~150kHz / RB 200Hz for QP
Start ~ Stop Frequency	150kHz~30MHz / RB 9kHz for QP
Start ~ Stop Frequency	30MHz~1000MHz / RB 120kHz for QP

FCC PART 15.249(a);
Except as provided in paragraph (a) of this section, the field strength of emissions from intentional radiators operated within these frequency bands shall comply with the following:

Frequency (MHz)	Field Strength of Fundamental (mV/m)	Field Strength of Harmonics (μV/m)
902-928	50	500
2400-2483.5	50	500
5725-5875	50	500

5.3.2 Test Procedures

a) The EUT is placed on a turntable, which is 0.8m above ground plane for test frequency range blew 1GHz, and 1.5m above ground plane for test frequency range above 1GHz.

b) EUT is set 3m away from the receiving antenna, which is varied from 1m to 4m to find out the highest emissions.

c) Use the following spectrum analyser settings:

1. Span = wide enough to fully capture the emission being measured

2. RBW = 1 MHz for f ≥ 1GHz, 100 kHz for f < 1 GHz
3. VBW ≥ RBW, Sweep = auto
4. Detector function = peak
5. Trace = max hold

d) Follow the guidelines in ANSI C63.4-2014 with respect to maximizing the emission by rotating the EUT, adjusting the measurement antenna height and polarization, etc. The peak reading of the emission, after being corrected by the antenna factor, cable loss, pre-amp gain, etc., is the peak field strength, submit this data. Each emission was to be maximized by changing the polarization of receiving antenna both horizontal and vertical.

e) The peak level, once corrected, must comply with the limit specified in Section 15.209. Set the RBW = 1MHz, VBW = 10Hz, Detector = PK for AV value, while maintaining all of the other instrument settings.

f) For the actual test configuration, please refer to the related item – EUT test photos.

5.3.3 Test Setup

Radiated Emission Test-Up Frequency Below 30MHz

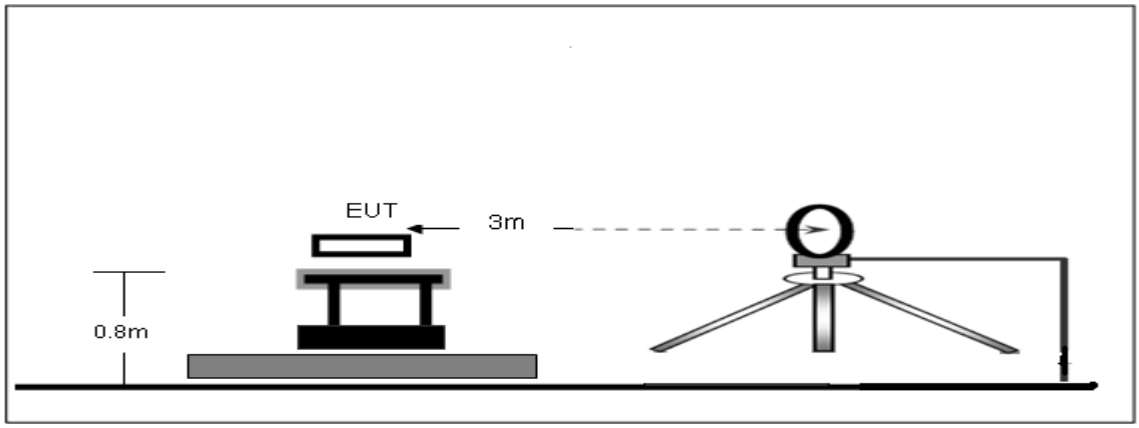

Radiated Emission Test-Up Frequency 30MHz~1GHz

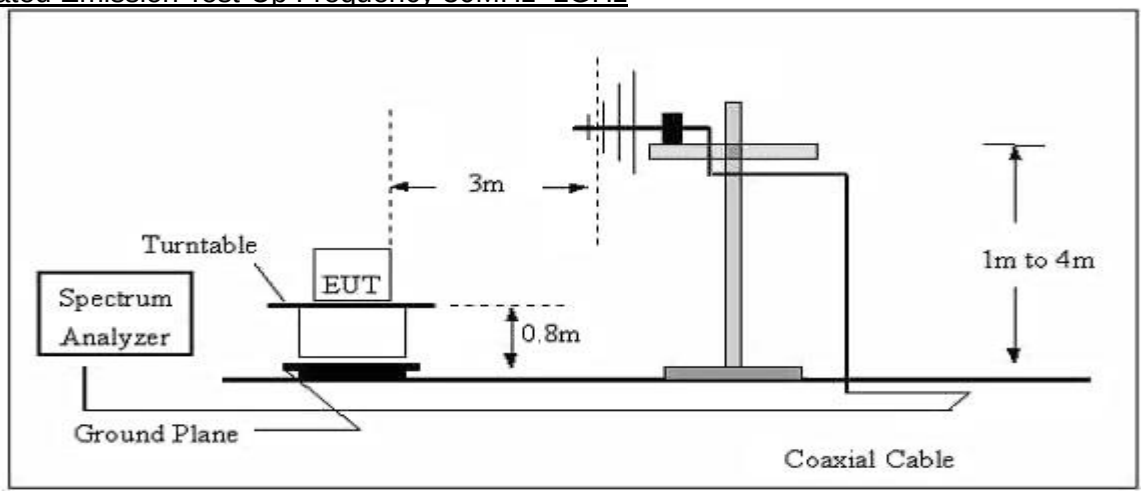

Radiated emission test-up frequency above 1GHz

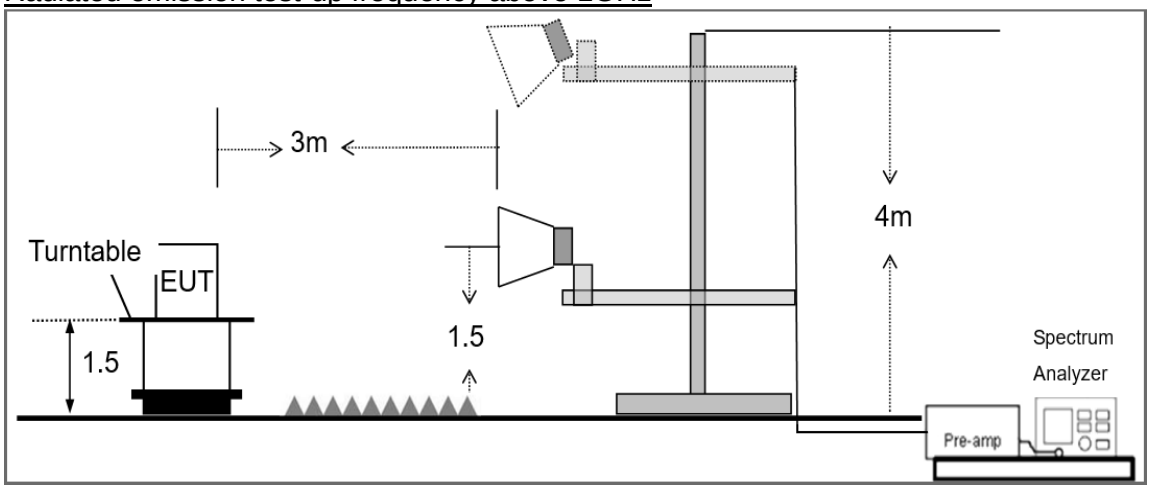

5.3.4 Test Result

Below 30MHz

EUT:	Wireless multi-mode keyboard	Model Name:	BKM01
Pressure:	1010 hPa	Test Voltage:	DC 3.7V
Test Mode:	TX	Polarization:	--

Freq.	Reading	Limit	Margin	State
(MHz)	(dBuV/m)	(dBuV/m)	(dB)	P/F
--	--	--	--	Pass
--	--	--	--	Pass

Note:

1. For 9kHz-30MHz, the amplitude of spurious emissions which are attenuated by more than 20dB below the permissible value has no need to be reported.
2. Distance extrapolation factor =40 log (specific distance/test distance)(dB);
3. Limit line = specific limits (dBuV) + distance extrapolation factor.

Frequency range (30MHz – 1GHz)

EUT：	Wireless multi-mode keyboard	Model Name:	BKM01
Test Mode：	TX	Phase :	Horizontal
Test Voltage:	DC 3.7V from battery		

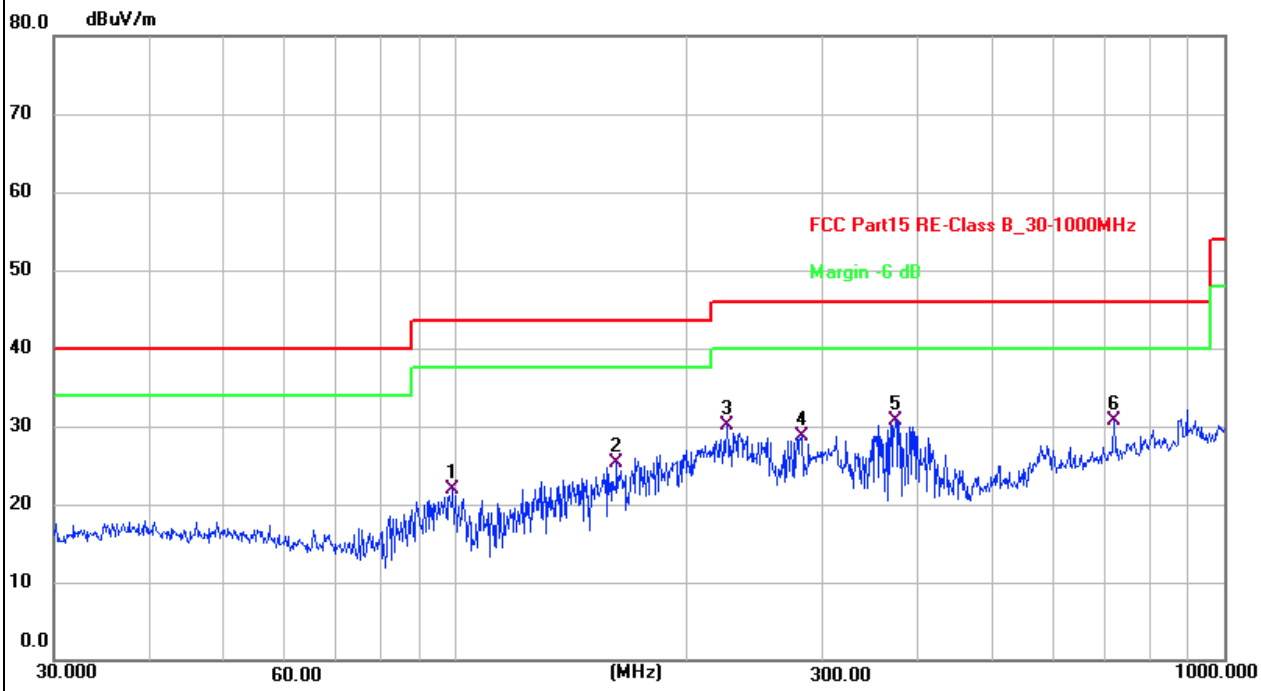

No.	Frequency (MHz)	Reading (dBuV)	Factor (dB/m)	Level (dBuV/m)	Limit (dBuV/m)	Margin (dB)	Detector	Height (cm)	Azimuth (deg.)	P/F	Remark
1	99.1797	34.61	-12.72	21.89	43.50	-21.61	QP	200	12	P	
2	162.0414	34.45	-9.17	25.28	43.50	-18.22	QP	200	12	P	
3	225.3080	40.95	-10.94	30.01	46.00	-15.99	QP	200	12	P	
4	281.9946	37.57	-8.79	28.78	46.00	-17.22	QP	100	79	P	
5 *	373.3112	37.73	-6.97	30.76	46.00	-15.24	QP	100	11	P	
6	719.1995	29.88	0.73	30.61	46.00	-15.39	QP	200	282	P	

Remarks:
1. Mesurement Level = Reading level + Correct Factor, Margin = Mesurement Level – Limit.
2.The emission levels of other frequencies are very lower than the limit and not show in test report.
3.All test modes were pre-tested, but we only recorded the worst case in this report.

EUT：	Wireless multi-mode keyboard	Model Name:	BKM01
Test Mode：	TX	Phase :	Vertical
Test Voltage:	DC 3.7V from battery		

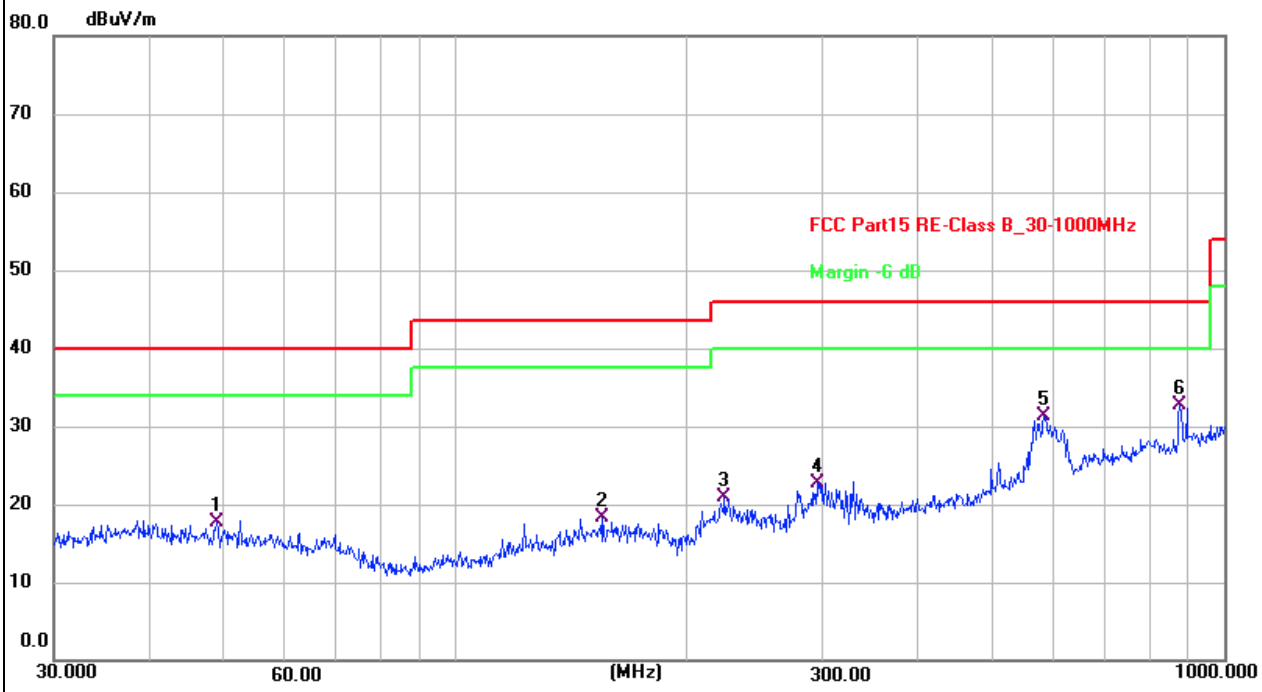

No.	Frequency (MHz)	Reading (dBuV)	Factor (dB/m)	Level (dBuV/m)	Limit (dBuV/m)	Margin (dB)	Detector	Height (cm)	Azimuth (deg.)	P/F	Remark
1	48.8429	26.66	-8.89	17.77	40.00	-22.23	QP	100	85	P	
2	155.3644	27.23	-8.89	18.34	43.50	-25.16	QP	100	9	P	
3	223.7334	31.86	-11.05	20.81	46.00	-25.19	QP	100	187	P	
4	295.1469	31.14	-8.45	22.69	46.00	-23.31	QP	100	36	P	
5	582.7425	32.92	-1.66	31.26	46.00	-14.74	QP	100	16	P	
6 *	875.2470	29.87	2.88	32.75	46.00	-13.25	QP	100	115	P	

Remarks:
1. Mesurement Level = Reading level + Correct Factor, Margin = Mesurement Level – Limit.
2.The emission levels of other frequencies are very lower than the limit and not show in test report.
3.All test modes were pre-tested, but we only recorded the worst case in this report.

5.3.5 Band edge–Field strength of fundamental

Frequency	Ant. Polarization	Emission level	Limits	Detector	Result
(MHz)	H / V	dBμV/m	dBμV/m		
2403	H	93.83	114	PK	PASS
2403	H	54.90	94	AV	PASS
2403	V	91.37	114	PK	PASS
2403	V	56.50	94	AV	PASS

Frequency	Ant. Polarization	Emission level	Limits	Detector	Result
(MHz)	H / V	dBμV/m	dBμV/m		
2441	H	93.52	114	PK	PASS
2441	H	53.62	94	AV	PASS
2441	V	88.13	114	PK	PASS
2441	V	51.84	94	AV	PASS

Frequency	Ant. Polarization	Emission level	Limits	Detector	Result
(MHz)	H / V	dBμV/m	dBμV/m		
2480	H	94.62	114	PK	PASS
2480	H	50.91	94	AV	PASS
2480	V	89.35	114	PK	PASS
2480	V	52.54	94	AV	PASS

1GHz-25GHz

Frequency	Read Level	Cable loss	Antenna Factor	Preamp Factor	Emission Level	Limits	Margin	Remark	Comment
(MHz)	(dBμV)	(dB)	dB/m	(dB)	(dBμV/m)	(dBμV/m)	(dB)		
Low Channel (2403 MHz)(GFSK)--Above 1G									
4806	66.71	5.21	35.59	44.30	63.21	74.00	-10.79	Pk	Vertical
4806	50.03	5.21	35.59	44.30	46.53	54.00	-7.47	AV	Vertical
7209	60.83	6.48	36.27	44.60	58.98	74.00	-15.02	Pk	Vertical
7209	43.11	6.48	36.27	44.60	41.26	54.00	-12.74	AV	Vertical
4806	69.78	5.21	35.55	44.30	66.24	74.00	-7.76	Pk	Horizontal
4806	53.88	5.21	35.55	44.30	50.34	54.00	-3.66	AV	Horizontal
7209	65.00	6.48	36.27	44.52	63.23	74.00	-10.77	Pk	Horizontal
7209	44.03	6.48	36.27	44.52	42.26	54.00	-11.74	AV	Horizontal
Mid Channel (2441 MHz)(GFSK)--Above 1G									
4882	65.79	5.21	35.66	44.20	62.46	74.00	-11.54	Pk	Vertical
4882	52.77	5.21	35.66	44.20	49.44	54.00	-4.56	AV	Vertical
7323	60.60	7.10	36.50	44.43	59.77	74.00	-14.23	Pk	Vertical
7323	45.43	7.10	36.50	44.43	44.60	54.00	-9.40	AV	Vertical
4882	68.45	5.21	35.66	44.20	65.12	74.00	-8.88	Pk	Horizontal
4882	54.49	5.21	35.66	44.20	51.16	54.00	-2.84	AV	Horizontal
7323	64.62	7.10	36.50	44.43	63.79	74.00	-10.21	Pk	Horizontal
7323	44.99	7.10	36.50	44.43	44.16	54.00	-9.84	AV	Horizontal
High Channel (2480 MHz)(GFSK)-- Above 1G									
4960	65.63	5.21	35.52	44.21	62.15	74.00	-11.85	Pk	Vertical
4960	50.35	5.21	35.52	44.21	46.87	54.00	-7.13	AV	Vertical
7440	60.94	7.10	36.53	44.60	59.97	74.00	-14.03	Pk	Vertical
7440	43.17	7.10	36.53	44.60	42.20	54.00	-11.80	AV	Vertical
4960	69.88	5.21	35.52	44.21	66.40	74.00	-7.60	Pk	Horizontal
4960	56.19	5.21	35.52	44.21	52.71	54.00	-1.29	AV	Horizontal
7440	64.42	7.10	36.53	44.60	63.45	74.00	-10.55	Pk	Horizontal
7440	45.66	7.10	36.53	44.60	44.69	54.00	-9.31	AV	Horizontal

Note:

1. All Readings are Peak Value (VBW=3MHz) and AV Value (VBW=10Hz).
2. Emission Level= Antenna Factor + Cable Loss + Read Level - Preamp Factor.

5.3.6 Band edge-radiated

All the modulation modes have been tested, and the worst result was report as below:

EUT:	Wireless multi-mode keyboard	Model Name:	BKM01
Pressure:	1010 hPa	Polarization:	Horizontal
Test voltage:	DC 3.7V	Test Mode:	TM1

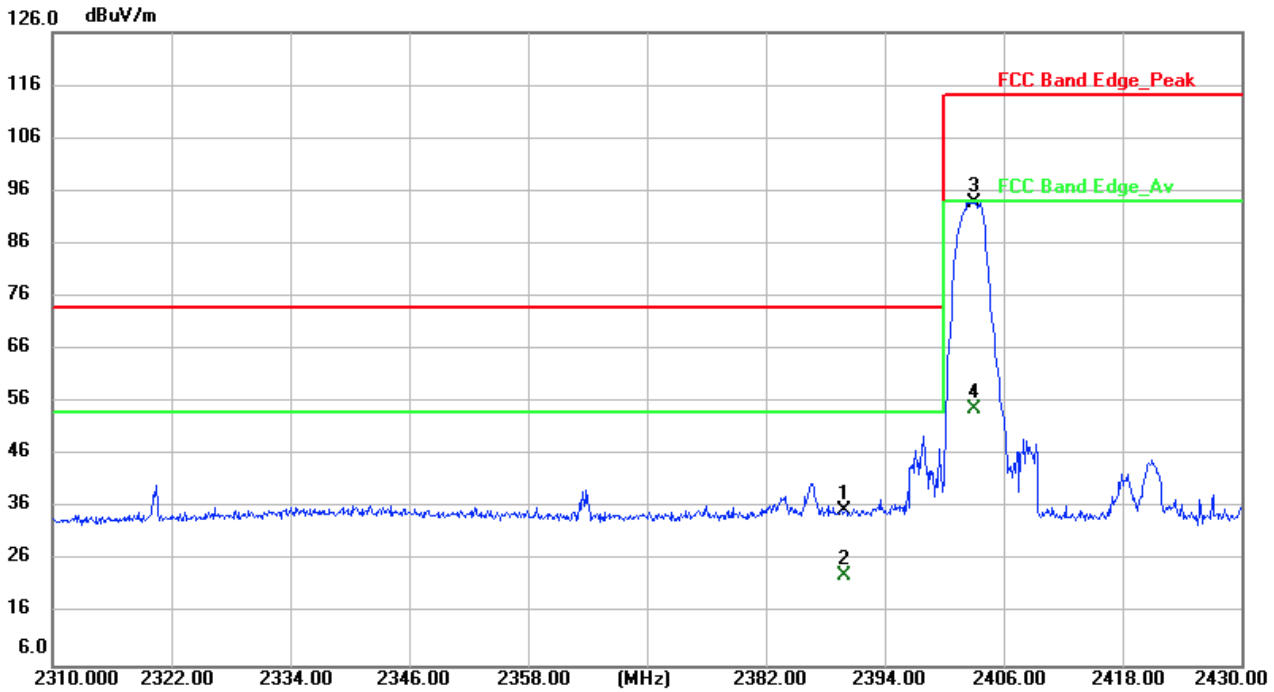

No.	Frequency (MHz)	Reading (dBuV)	Factor (dB/m)	Level (dBuV/m)	Limit (dBuV/m)	Margin (dB)	Detector	Height (cm)	Azimuth (deg.)	P/F	Remark
1	2390.000	56.38	-20.96	35.42	74.00	-38.58	peak	150	87	P	
2	2390.000	44.17	-20.96	23.21	54.00	-30.79	AVG	150	87	P	
3 *	2403.000	114.73	-20.90	93.83	114.00	-20.17	peak	150	229	P	
4	2403.000	75.80	-20.90	54.90	94.00	-39.10	AVG	150	229	P	

EUT:	Wireless multi-mode keyboard	Model Name:	BKM01
Pressure:	1010 hPa	Polarization:	Vertical
Test voltage:	DC 3.7V	Test Mode:	TM1

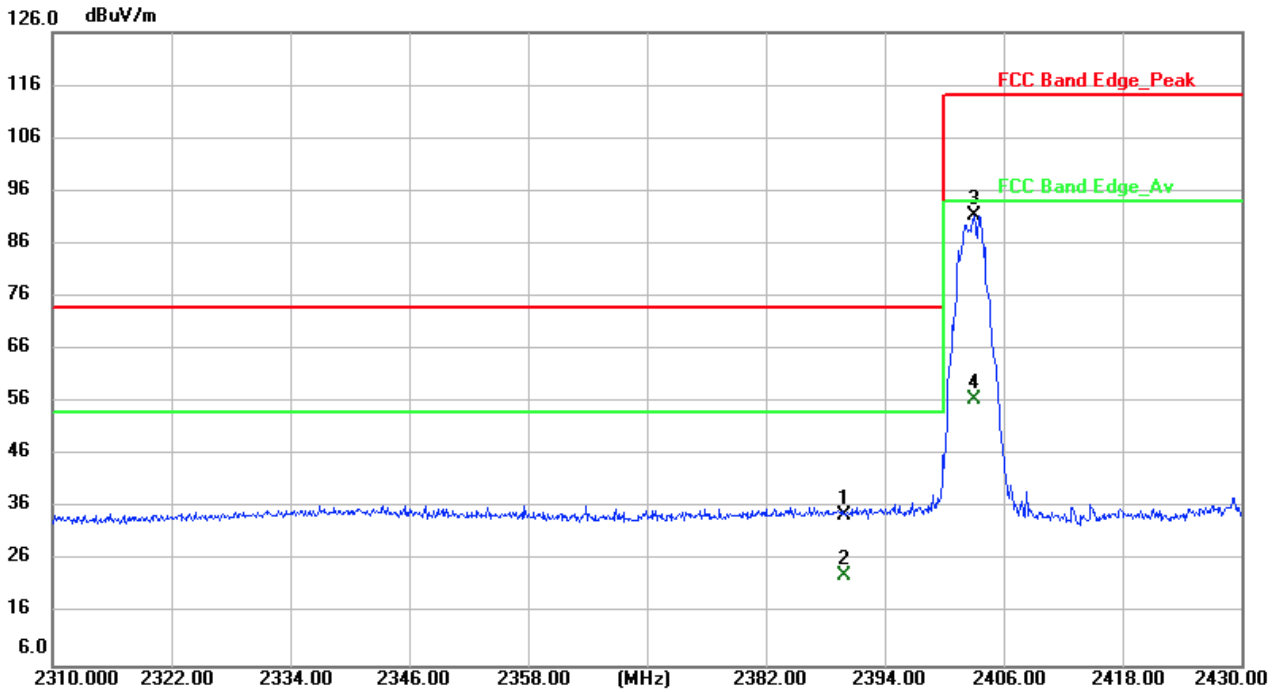

No.	Frequency (MHz)	Reading (dBuV)	Factor (dB/m)	Level (dBuV/m)	Limit (dBuV/m)	Margin (dB)	Detector	Height (cm)	Azimuth (deg.)	P/F	Remark
1	2390.000	55.66	-20.96	34.70	74.00	-39.30	peak	150	346	P	
2	2390.000	44.19	-20.96	23.23	54.00	-30.77	AVG	150	346	P	
3 *	2403.000	112.27	-20.90	91.37	114.00	-22.63	peak	150	337	P	
4	2403.000	77.40	-20.90	56.50	94.00	-37.50	AVG	150	337	P	

EUT:	Wireless multi-mode keyboard	Model Name:	BKM01
Pressure:	1010 hPa	Polarization:	Horizontal
Test voltage:	DC 3.7V	Test Mode:	TM3

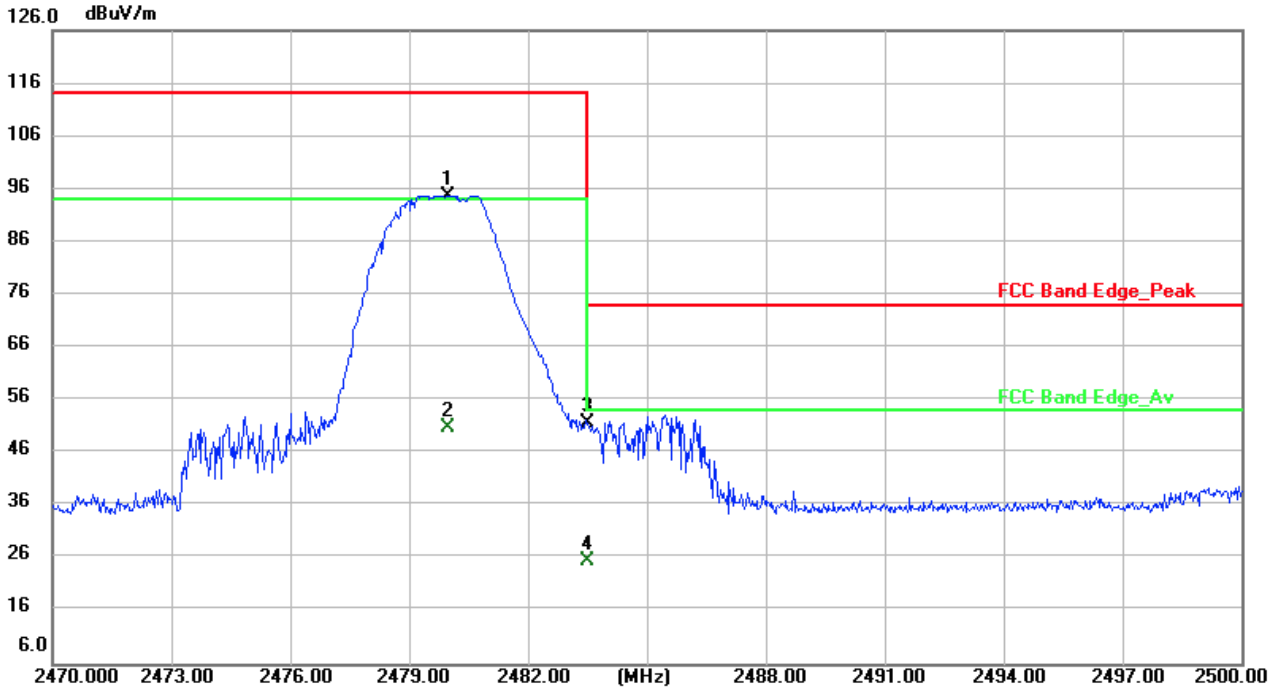

No.	Frequency (MHz)	Reading (dBuV)	Factor (dB/m)	Level (dBuV/m)	Limit (dBuV/m)	Margin (dB)	Detector	Height (cm)	Azimuth (deg.)	P/F	Remark
1 *	2480.000	115.15	-20.53	94.62	114.00	-19.38	peak	150	349	P	
2	2480.000	71.44	-20.53	50.91	94.00	-43.09	AVG	150	349	P	
3	2483.500	72.39	-20.51	51.88	74.00	-22.12	peak	150	251	P	
4	2483.500	46.09	-20.51	25.58	54.00	-28.42	AVG	150	251	P	

EUT:	Wireless multi-mode keyboard	Model Name:	BKM01
Pressure:	1010 hPa	Polarization:	Vertical
Test voltage:	DC 3.7V	Test Mode:	TM3

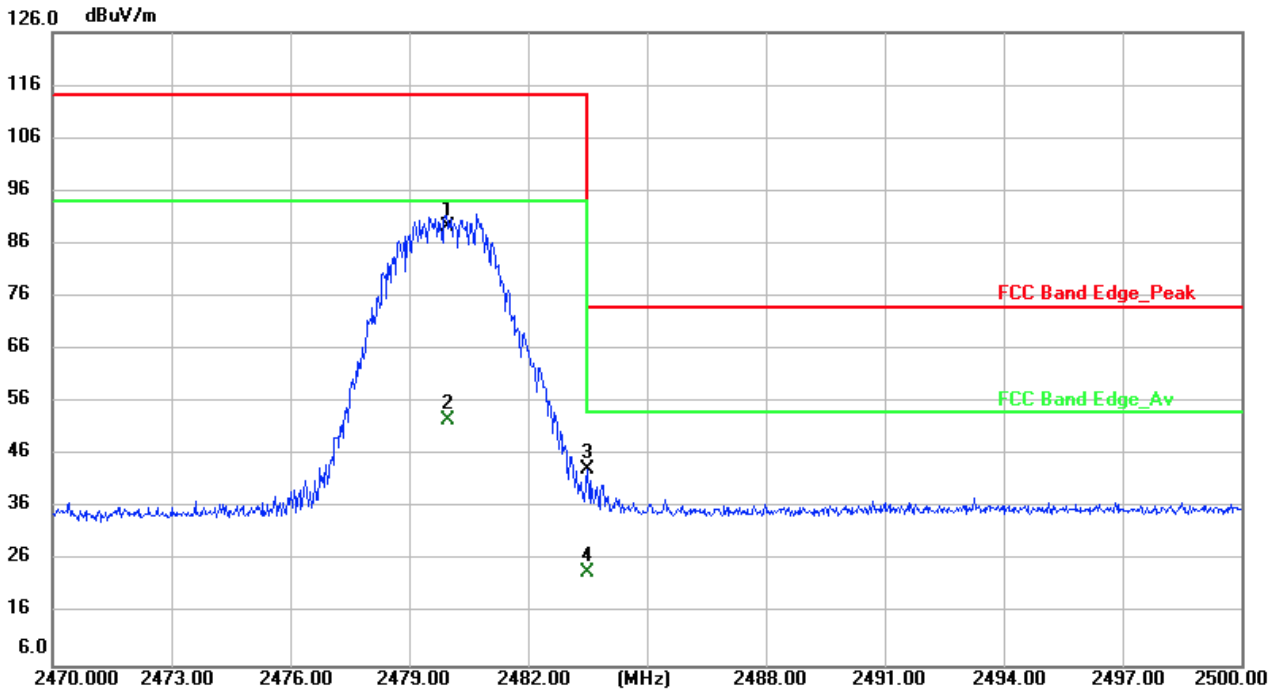

No.	Frequency (MHz)	Reading (dBuV)	Factor (dB/m)	Level (dBuV/m)	Limit (dBuV/m)	Margin (dB)	Detector	Height (cm)	Azimuth (deg.)	P/F	Remark
1 *	2480.000	109.88	-20.53	89.35	114.00	-24.65	peak	150	79	P	
2	2480.000	73.07	-20.53	52.54	94.00	-41.46	AVG	150	79	P	
3	2483.500	63.82	-20.51	43.31	74.00	-30.69	peak	150	306	P	
4	2483.500	44.29	-20.51	23.78	54.00	-30.22	AVG	150	306	P	

Note:

1. All Readings are Peak Value (VBW=3MHz) and AV Value (VBW=10Hz).
2. Emission Level= Antenna Factor + Cable Loss + Read Level - Preamp Factor.
3. All other emissions more than 20dB below the limit.

5.4 20dB and 99% Bandwidth

5.4.1 Limit

FCC §15.215(c)

Intentional radiators operating under the alternative provisions to the general emission limits, as contained in § 15.217 through 15.257 and in Subpart E of this part, must be designed to ensure that the 20 dB bandwidth of the emission, or whatever bandwidth may otherwise be specified in the specific rule section under which the equipment operates, is contained within the frequency band designated in the rule section under which the equipment is operated.

5.4.2 Test Procedure

1. Use the following spectrum analyzer settings:
2. For 20 dB bandwidth
3. Span = approximately 2 to 3 times the 20 dB bandwidth, centered on a hopping channel
4. RBW ≥1% of the 20 dB bandwidth
5. VBW ≥RBW
6. Sweep = auto
7. Detector function = peak
8. Trace = max hold
9. The EUT should be transmitting at its maximum data rate. Allow the trace to stabilize. Use the marker-to-peak function to set the marker to the peak of the emission. Use the marker-delta function to measure 20 dB down one side of the emission. Reset the marker-delta function, and move the marker to the other side of the emission, until it is (as close as possible to) even with the reference marker level. The marker-delta reading at this point is the 20 dB bandwidth and 99% occupied bandwidth of the emission

5.4.3 Test Setup

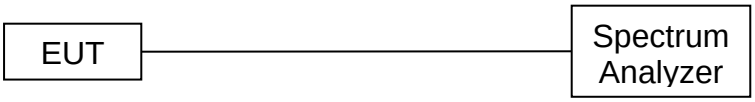

5.4.4 Test Results

Frequency (MHz)	20dB bandwidth (MHz)	99% Bandwidth (MHz)
2403	2.224	2.3582
2441	2.223	2.2388
2480	2.216	2.1583

Test plots

2403

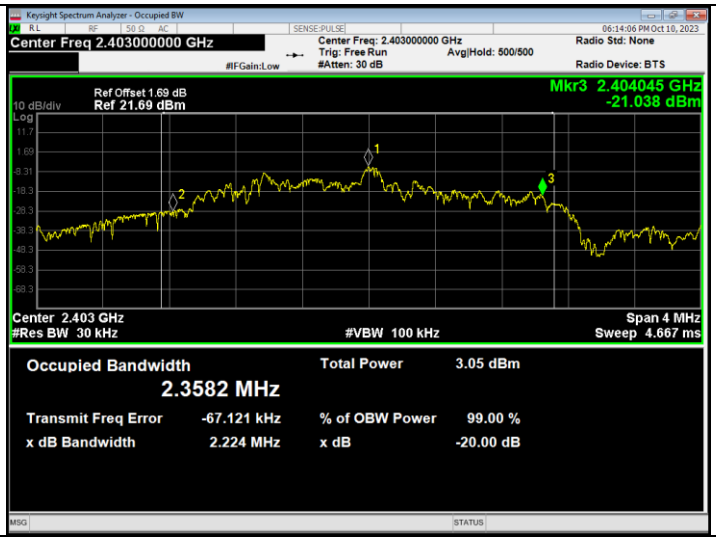

2441

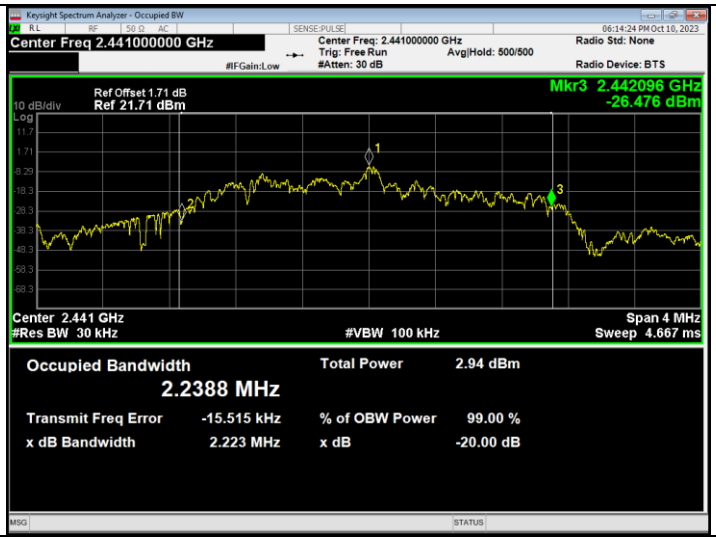

2480

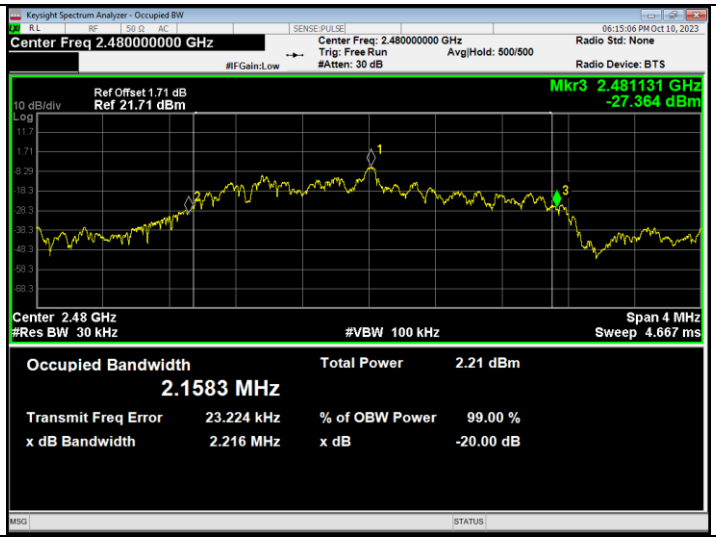

6 Photographs of the Test Setup

Reference to the appendix Test Setup Photos for details.

7 Photographs of the EUT

Reference to the appendix External Photos and Internal Photos for details.

******** END OF REPORT ********