Shenzhen Huatongwei International Inspection Co.,Ltd.
Huatongwei 101, No.006, Keji south 12th Road, High-tech zone community, Yuehai Street,
Nanshan District, Shenzhen, Guangdong, China
Phone:86-755-26715499 E-mail: cs@szhtw.com.cn Website:http://www.szhtw.com.cn

TEST REPORT

For DFS

Report Verification:

Report No. ..... :	**CHTEW24010018**
Project No.....:	**SHT2307016301EW**
FCC ID..... :	**2BDG9-697083172PF27**
Applicant's name..... :	**Shenzhen Insighters Medical Technology Co.,Ltd**
Address.....:	The 13th floor of Hengtemei Building, Ganli Road No.3,518000 Shenzhen, Guangdong, PEOPLE'S REPUBLIC OF CHINA
Product Name ..... :	**Insight Workstation**
Trade Mark .....:	insighters Trust in sight
Model No. .....:	iS-PF1
Listed Model(s) .....:	iS-PF2
Standard ..... :	**FCC CFR Title 47 Part 15 Subpart E § 15.407**
Date of receipt of test sample.....:	Oct.24, 2023
Date of testing.....:	Oct.24, 2023- Jan.10, 2024
Date of issue.....:	Jan.11, 2024
Result..... .....:	**PASS**

Compiled by (position+printedname+signature)...:	File administrators Kiki Kong	Kiki Kong
Supervised by (position+printedname+signature)....:	Project Engineer Kiki Kong	Kiki Kong
Approved by (position+printedname+signature)....:	RF Manager Xu yang	Xu. Yang

Testing Laboratory Name ..... :	**Shenzhen Huatongwei International Inspection Co., Ltd**
Address.....:	Building 7, Baiwang Idea Factory, No.1051, Songbai Road, Yangguang Community, Xili Subdistrict, Nanshan District, Shenzhen, Guangdong, China

Shenzhen Huatongwei International Inspection Co., Ltd. All rights reserved.

This publication may be reproduced in whole or in part for non-commercial purposes as long as the Shenzhen Huatongwei International Inspection Co., Ltd. is acknowledged as copyright owner and source of the material. Shenzhen Huatongwei International Inspection Co., Ltd. takes no responsibility for and will not assume liability for damages resulting from the reader's interpretation of the reproduced material due to its placement and context.

The test report merely correspond to the test sample.

Contents

1. TEST STANDARDS AND REPORT VERSION 3

1.1. Test Standards 3
1.2. Report Version 3

2. TEST DESCRIPTION 4

3. SUMMARY 5

3.1. Client Information 5
3.2. Product Description 5
3.3. Radio Specification Description 6
3.4. Testing Laboratory Information 6

4. TEST CONFIGURATION 7

4.1. Test frequency list 7
4.2. Descriptions of Test mode 7
4.3. Test sample information 7
4.4. Support unit used in test configuration and system 7
4.5. Testing environmental condition 8
4.6. Statement of the measurement uncertainty 8
4.7. Equipments Used during the Test 8

5. DFS TEST INFORMATION 9

5.1. DFS test requirement 9
5.2. DFS Detection Thresholds 11
5.3. RADAR TEST WAVEFORMS 12

6. TEST CONDITIONS AND RESULTS 15

6.1. Calibration of Radar Waveform 15
6.2. Channel Move Time, Channel Closing Transmission Time 16

7. TEST SETUP PHOTOS 18

8. EXTERNAL AND INTERNAL PHOTOS 18

9. APPENDIX REPORT 18

1. TEST STANDARDS AND REPORT VERSION

1.1. Test Standards

The tests were performed according to following standards:

FCC CFR Title 47 Part 15 Subpart E § 15.407: General technical requirements

ANSI C63.10-2013: American National Standard for Testing Unlicensed Wireless Devices

KDB905462 D02 v02: COMPLIANCE MEASUREMENT PROCEDURES FOR UNLICENSED-NATIONAL INFORMATION INFRASTRUCTURE DEVICES OPERATING IN THE 5250-5350 MHz AND 5470-5725 MHz BANDS INCORPORATING DYNAMIC FREQUENCY SELECTION

KDB905462 D03 v01r02: U-NII CLIENT DEVICES WITHOUT RADAR DETECTION CAPABILITY

KDB905462 D04 v01: OPERATIONAL MODES SUGGESTED FOR DFS TESTING

1.2. Report Version

Revision No.	Date of issue	Description
N/A	2024-01-11	Original

2. TEST DESCRIPTION

Report clause	Test Items	Standard Requirement	Result	Test Engineer
5.1	Channel move time	15.407(i)	PASS	Xiangyuwei
5.2	Channel closing transmission time	15.407(i)	PASS	Xiangyuwei

Remark: The measurement uncertainty is not included in the test result.

3. SUMMARY

3.1. Client Information

Applicant:	Shenzhen Insighters Medical Technology Co.,Ltd
Address:	The 13th floor of Hengtemei Building, Ganli Road No.3,518000 Shenzhen, Guangdong, PEOPLE'S REPUBLIC OF CHINA
Manufacturer:	Shenzhen Insighters Medical Technology Co.,Ltd
Address:	The 13th floor of Hengtemei Building, Ganli Road No.3,518000 Shenzhen, Guangdong, PEOPLE'S REPUBLIC OF CHINA

3.2. Product Description

Main unit information:	
Product Name:	Insight Workstation
Trade Mark:	insighters Trust in sight
Model No.:	iS-PF1
Listed Model(s):	iS-PF2
Power supply:	DC 7.4V from Battery
Hardware version:	1.0.82
Software version:	PF1V1.0.0.118
Accessory unit information:	
Battery information:	Model:18650-2S5P 7.4V 13000mAh 96.2Wh
Adapter information:	Model:PH50-112 Input:100-240V a.c., 50/60Hz 1.4-0.6A Output:12Vd.c., 4.0A

3.3. Radio Specification Description

Support type*1	☒ 802.11a	☒ 802.11n	☒ 802.11ac
Support Bandwidth	20MHz:	802.11n, 802.11a, 802.11ac	
	40MHz:	802.11n, 802.11ac	
	80MHz:	802.11ac	
Operation frequency:	☒ U-NII-1 Band:	5150MHz~5250MHz	
	☒ U-NII-2A Band:	5250MHz~5350MHz	
	☒ U-NII-2C Band:	5470MHz~5725MHz	
	☒ U-NII-3 Band:	5725MHz~5850MHz	
Modulation:	BPSK, QPSK, 16QAM, 64QAM		
Function:	☐ Outdoor AP ☒ Client	☐ Indoor AP	☐ Fixed P2P
DFS type:	☐ Master devices	☐ Slave devices with radar detection	☒ Slave devices without radar detection
Antenna technology:	☒ SISO	☐ MIMO	
Antenna type:	PCB Antenna		
Antenna gain:	5.55dBi		

Note:

*1: only show the RF function associated with this report.

3.4. Testing Laboratory Information

Laboratory Name	Shenzhen Huatongwei International Inspection Co., Ltd.	
Laboratory Location	Building 7, Baiwang Idea Factory, No.1051, Songbai Road, Yangguang Community, Xili Subdistrict, Nanshan District, Shenzhen, Guangdong, China	
Contact information:	Phone: 86-755-26715499 E-mail: cs@szhtw.com.cn http://www.szhtw.com.cn	
Qualifications	Type	Accreditation Number
	FCC Registration Number	762235
	FCC Designation Number	CN1181

4. TEST CONFIGURATION

4.1. Test frequency list

According to section 15.31(m), regards to the operating frequency range over 10 MHz, must select three channel which were tested. the Lowest frequency, the middle frequency, and the highest frequency of channel were selected to perform the test, please see the above gray bottom.

Band	Test Channel	20MHz		40MHz		80MHz	
		Channel	Frequency (MHz)	Channel	Frequency (MHz)	Channel	Frequency (MHz)
U-NII-2A	CH_L	52	5260	54	5270	-	-
	CH_M	56	5280	-	-	58	5290
	CH_H	64	5320	62	5310	-	-
U-NII-2C	CH_L	100	5500	102	5510	106	5530
	CH_M	120	5600	118	5590	122	5610
	CH_H	140	5700	134	5670	138	5690

4.2. Descriptions of Test mode

Preliminary tests were performed in different data rate, and found which the below bit rate is worst case mode, so only show data which it is a worst case mode.

Mode	Data rate (worst mode)
802.11a	6Mbps
802.11n(HT20)/ac(HT20)	MCS0
802.11n(HT40)/ac(HT40)	MCS0
802.11ac(HT80)	MCS0

4.3. Test sample information

Test item	HTW sample no.
RF Conducted test items	Please refer to the description in the appendix report

Note:

RF Conducted test items: Channel move time, Channel closing transmission time

4.4. Support unit used in test configuration and system

The EUT has been associated with peripherals and configuration operated in a manner tended to maximize its emission characteristics in a typical application.

The following peripheral devices and interface cables were connected during the measurement:

Whether support unit is used?			
✓ No			
Item	Equipment	Trade Name	Model No.
1			
2			

4.5. Testing environmental condition

Type	Requirement	Actual
Temperature:	15~35°C	25°C
Relative Humidity:	25~75%	50%
Air Pressure:	860~1060mbar	1000mbar

4.6. Statement of the measurement uncertainty

No.	Test Items	Measurement Uncertainty
1	AC Conducted Emission	3.21dB
2	Maximum Conducted Output Power	1.07
3	Maximum Power Spectral Density	1.07
4	26dB Bandwidth and 99% Ocuppy bandwith	0.002%
5	6dB Bandwidth	0.002%
6	Radiated Band Edge Emission	4.54dB for 30MHz-1GHz 5.10dB for above 1GHz
7	Radiated Spurious Emission	4.54dB for 30MHz-1GHz 5.10dB for above 1GHz
8	Frequency Stability	0.05ppm

(1) This uncertainty represents an expanded uncertainty expressed at approximately the 95% confidence level using a coverage factor of k=1.96.

4.7. Equipments Used during the Test

● TS8997 Test system							
Used	Test Equipment	Manufacturer	Equipment No.	Model No.	Serial No.	Last Cal. Date (YY-MM-DD)	Next Cal. Date (YY-MM-DD)
●	Signal and spectrum Analyzer	R&S	HTWE0242	FSV40	100048	2023/08/22	2024/08/21
●	Signal generator	R&S	HTWE0241	SMB100A	177956	2023/08/25	2024/08/24
●	Vector signal generator	R&S	HTWE0244	SMBV100A	260790	2023/05/23	2024/05/22
●	OSP	R&S	HTWE0243	OSP120	101317	2023/08/25	2024/08/24
●	10dB Attenuator	R&S	HTWE0250-01	10dB Attenuator-1	N/A	2023/05/15	2024/05/14
●	10dB Attenuator	R&S	HTWE0250-02	10dB Attenuator-2	N/A	2023/05/15	2024/05/14
●	10dB Attenuator	R&S	HTWE0250-03	10dB Attenuator-3	N/A	2023/05/15	2024/05/14
●	10dB Attenuator	R&S	HTWE0250-04	10dB Attenuator-4	N/A	2023/05/15	2024/05/14

5. DFS TEST INFORMATION

5.1. DFS test requirement

The following table from FCC KDB905462 D02 UNII DFS Compliance procedures new rules list the applicable requirements for the DFS testing.

Table 1: Applicability of DFS Requirements Prior to Use of a Channel

Requirement	Operational Mode		
	Master	Client Without Radar Detection	Client With Radar Detection
Non-Occupancy Period	Yes	Not required	Yes
DFS Detection Threshold	Yes	Not required	Yes
Channel Availability Check Time	Yes	Not required	Not required
U-NII Detection Bandwidth	Yes	Not required	Yes

Table 2: Applicability of DFS requirements during normal operation

Requirement	Operational Mode	
	Master Device or Client with Radar Detection	Client Without Radar Detection
DFS Detection Threshold	Yes	Not required
Channel Closing Transmission Time	Yes	Yes
Channel Move Time	Yes	Yes
U-NII Detection Bandwidth	Yes	Not required

Additional requirements for devices with multiple bandwidth modes	Master Device or Client with Radar Detection	Client Without Radar Detection
U-NII Detection Bandwidth and Statistical Performance Check	All BW modes must be tested	Not required
Channel Move Time and Channel Closing Transmission Time	Test using widest BW mode available	Test using the widest BW mode available for the link
All other tests	Any single BW mode	Not required
Note: Frequencies selected for statistical performance check (Section 7.8.4) should include several frequencies within the radar detection bandwidth and frequencies near the edge of the radar detection bandwidth. For 802.11 devices it is suggested to select frequencies in each of the bonded 20 MHz channels and the channel center frequency.		

Master Devices

a) The Master Device will use DFS in order to detect Radar Waveforms with received signal strength above the DFS Detection Threshold in the 5250~5350 MHz and 5470~5725 MHz bands. DFS is not required in the 5150~5250 MHz or 5725~5825 MHz bands.

b) Before initiating a network on a Channel, the Master Device will perform a Channel Availability Check for a specified time duration (Channel Availability Check Time) to ensure that there is no radar system operating on the Channel, using DFS described under subsection a) above.

c) The Master Device initiates a U-NII network by transmitting control signals that will enable other U-NII devices to Associate with the Master Device.

d) During normal operation, the Master Device will monitor the Channel (In-Service Monitoring) to ensure that there is no radar system operating on the Channel, using DFS described under a).

e) If the Master Device has detected a Radar Waveform during In-Service Monitoring as described under d), the Operating Channel of the U-NII network is no longer an Available Channel. The Master Device will instruct all associated Client Device(s) to stop transmitting on this Channel within the Channel Move

Time. The transmissions during the Channel Move Time will be limited to the Channel Closing Transmission Time.

f) Once the Master Device has detected a Radar Waveform it will not utilize the Channel for the duration of the Non-Occupancy Period.

g) If the Master Device delegates the In-Service Monitoring to a Client Device, then the combination will be tested to the requirements described under d) through f) above.

Client Devices

a) A Client Device will not transmit before having received appropriate control signals from a Master Device.

b) A Client Device will stop all its transmissions whenever instructed by a Master Device to which it is associated and will meet the Channel Move Time and Channel Closing Transmission Time requirements. The Client Device will not resume any transmissions until it has again received control signals from a Master Device.

c) If a Client Device is performing In-Service Monitoring and detects a Radar Waveform above the DFS Detection Threshold, it will inform the Master Device. This is equivalent to the Master Device detecting the Radar Waveform and d) through f) of section 5.1.1 apply.

d) Irrespective of Client Device or Master Device detection the Channel Move Time and Channel Closing Transmission Time requirements remain the same.

e) The client test frequency must be monitored to ensure no transmission of any type has occurred for 30 minutes. Note: If the client moves with the master, the device is considered compliant if nothing appears in the client non-occupancy period test. For devices that shut down (rather than moving channels), no beacons should appear.

Table 4: DFS Response Requirement Values

Paramenter	Value
Non-occupancy period	Minimum 30 minutes
Channel Availability Check Time	60 seconds
Channel Move Time	10 seconds See Note 1.
Channel Closing Transmission Time	200 milliseconds + an aggregate of 60 milliseconds over remaining 10 second period. See Notes 1 and 2.
U-NII Detection Bandwidth	Minimum 100% of the U-NII 99% transmission power bandwidth. See Note 3.

Note 1: Channel Move Time and the Channel Closing Transmission Time should be performed with Radar Type 0. The measurement timing begins at the end of the Radar Type 0 burst.

Note 2: The Channel Closing Transmission Time is comprised of 200 milliseconds starting at the beginning of the Channel Move Time plus any additional intermittent control signals required facilitating a Channel move (an aggregate of 60 milliseconds) during the remainder of the 10 second period. The aggregate duration of control signals will not count quiet periods in between transmissions.

Note 3: During the U-NII Detection Bandwidth detection test, radar type 0 should be used. For each frequency step the minimum percentage of detection is 90 percent. Measurements are performed with no data traffic.

5.2. DFS Detection Thresholds

Table 3: DFS Detection Thresholds for Master Devices and Client Devices With Radar Detection

Maximum Transmit Power	Value (See Notes 1, 2, and 3)
EIRP ≥ 200 milliwatt	-64 dBm
EIRP < 200 milliwatt and power spectral density < 10 dBm/MHz	-62 dBm
EIRP < 200 milliwatt that do not meet the power spectral density requirement	-64 dBm
Note 1: This is the level at the input of the receiver assuming a 0 dBi receive antenna. Note 2: Throughout these test procedures an additional 1 dB has been added to the amplitude of the test transmission waveforms to account for variations in measurement equipment. This will ensure that the test signal is at or above the detection threshold level to trigger a DFS response. Note3: EIRP is based on the highest antenna gain. For MIMO devices refer to KDB Publication 662911 D01.	

5.3. RADAR TEST WAVEFORMS

This section provides the parameters for required test waveforms, minimum percentage of successful detections, and the minimum number of trials that must be used for determining DFS conformance. Step intervals of 0.1 microsecond for Pulse Width, 1 microsecond for PRI, 1 MHz for chirp width and 1 for the number of pulses will be utilized for the random determination of specific test waveforms.

Table 5 Short Pulse Radar Test Waveforms

Radar Type	Pulse Width (µsec)	PRI (µsec)	Number of Pulses	Minimum Percentage of Successful Detection	Minimum Number of Trials
0	1	1428	18	See Note 1	See Note 1
1	1	Test A: 15 unique PRI values randomly selected from the list of 23 PRI values in Table 5a	$\text{Roundup}\left\{\left(\frac{1}{360}\right)\cdot\left(\frac{19\cdot 10^6}{\text{PRI}_{\mu sec}}\right)\right\}$	60%	30
		Test B: 15 unique PRI values randomly selected within the range of 518-3066 µsec, with a minimum increment of 1 µsec, excluding PRI values selected in Test A			
2	1-5	150-230	23-29	60%	30
3	6-	200-500	16-18	60%	30
4	11-	200-500	12-16	60%	30
Aggregate (Radar Types 1-4)				80%	120
Note 1: Short Pulse Radar Type 0 should be used for the detection bandwidth test, channel move time, and channel closing time tests.					

A minimum of 30 unique waveforms are required for each of the Short Pulse Radar Types 2 through 4. If more than 30 waveforms are used for Short Pulse Radar Types 2 through 4, then each additional waveform must also be unique and not repeated from the previous waveforms. If more than 30 waveforms are used for Short Pulse Radar Type 1, then each additional waveform is generated with Test B and must also be unique and not repeated from the previous waveforms in Tests A or B.

For example if in Short Pulse Radar Type 1 Test B a PRI of 3066 µsec is selected, the number of pulses would be Round up $\left\{\left(\frac{1}{360}\right)\cdot\left(\frac{19\cdot 10^6}{3066}\right)\right\}$ = Round up {17.2} = 18.

Table 5a - Pulse Repetition Intervals Values for Test A

Pulse Repetition Frequency Number	Pulse Repetition Frequency (Pulses Per Second)	Pulse Repetition Interval (Microseconds)
1	1930.5	518
2	1858.7	538
3	1792.1	558
4	1730.1	578
5	1672.2	598
6	1618.1	618
7	1567.4	638
8	1519.8	658
9	1474.9	678
10	1432.7	698
11	1392.8	718
12	1355	738
13	1319.3	758
14	1285.3	778
15	1253.1	798
16	1222.5	818
17	1193.3	838
18	1165.6	858
19	1139	878
20	1113.6	898
21	1089.3	918
22	1066.1	938
23	326.2	3066

Table 6 – Long Pulse Radar Test Waveform

Radar Type	Pulse Width (µsec)	Chirp Width (MHz)	PRI (µsec)	Number of Pulses per Burst	Number of Bursts	Minimum Percentage of Successful Detection	Minimum Number of Trials
5	50-100	5-20	1000-2000	1-3	8-20	80%	30

The parameters for this waveforms are randomly chosen. Thirty unique waveforms are required for the Long Pulse Radar Type waveforms. If more than 30 waveforms are used for the Long Pulse Radar Type wave forms, then each additional waveform must also be unique and not repeated from the previous waveforms.

Table 7 – Frequency Hopping Radar Test Waveform

Radar Type	Pulse Width (µsec)	PRI (µsec)	Pulses per Hop	Hopping Rate (kHz)	Hopping Sequence Length (msec)	Minimum Percentage of Successful Detection	Minimum Number of Trials
6	1	333	9	0.333	300	70%	30

For the Frequency Hopping Radar Type, the same Burst parameters are used for each wave form. The hopping sequence is different for each wave form and a 100-length segment is selected from the hopping sequence defined by the following algorithm:

The first frequency in a hopping sequence is selected randomly from the group of 475 integer frequencies from 5250–5724MHz.Next,the frequency that was just chosen is removed from the group and a frequency is randomly selected from the remaining 474 frequencies in the group. This process continues until all 475 frequencies are chosen for the set. For selection of a random frequency, the frequencies remaining within the group are always treated as equally likely.

6. TEST CONDITIONS AND RESULTS

6.1. Calibration of Radar Waveform

TEST CONFIGURATION

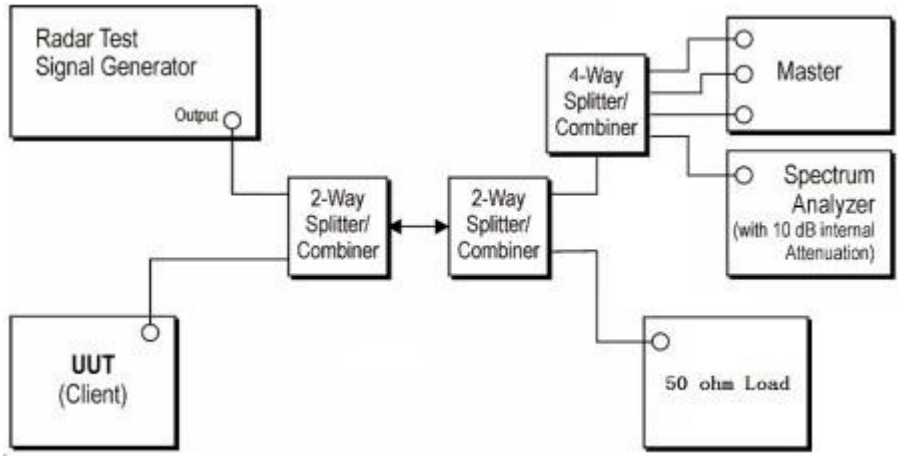

TEST PROCEDURE

a) A 50 ohm load is connected in place of the spectrum analyzer, and the spectrum analyzer is connected to place of the master

b) The interference Radar Detection Threshold Level is -62dBm + 0dBi +1dB = -61dBm that had been taken into account the output power range and antenna gain.

c) The following equipment setup was used to calibrate the conducted radar waveform. A vector signal generator was utilized to establish the test signal level for radar type 0. During this process there were no transmissions by either the master or client device. The spectrum analyzer was switched to the zero spans (time domain) at the frequency of the radar waveform generator. Peak detection was used. The spectrum analyzer resolution bandwidth (RBW) and video bandwidth (VBW) were set to 3MHz. The spectrum analyzer had offset -1.0dB to compensate RF cable loss 1.0dB.

d) The vector signal generator amplitude was set so that the power level measured at the spectrum analyzer was - -62dBm + 0dBi +1dB = -61dBm. Capture the spectrum analyzer plots on short pulse radar waveform.

TEST MODE:

Please refer to the clause 3.3

TEST RESULTS

☒ **Passed** ☐ **Not Applicable**

TEST DATA

Refer to the appendix report on the section 9

6.2. Channel Move Time, Channel Closing Transmission Time

TEST CONFIGURATION

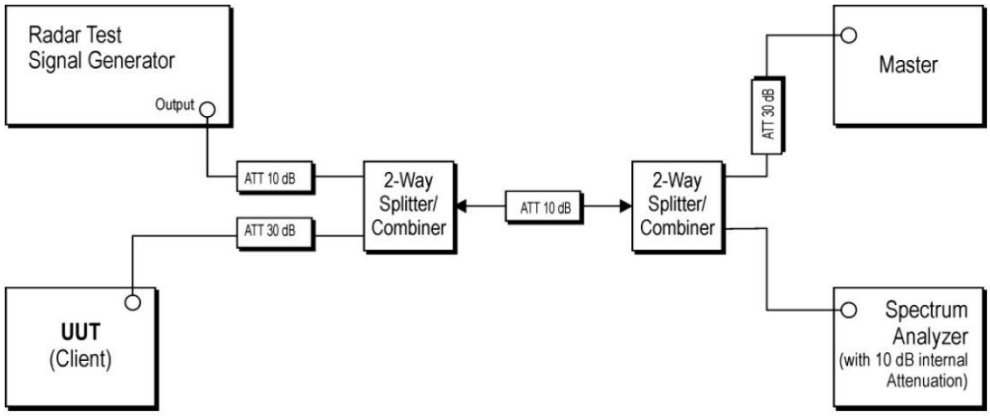

TEST PROCEDURE

a) The radar pulse generator is setup to provide a pulse at frequency that the master and client are operating. A type 0 radar pulse with a 1us pulse width and a 1428us PRI is used for the testing.

b) The vector signal generator is adjusted to provide the radar burst (18 pulses) at the level of approximately -61dBm at the antenna port of the master device

c) A trigger is provided from the pulse generator to the DFS monitoring system in order to capture the traffic and the occurrence of the radar pulse.

d) EUT will associate with the master at channel. The file “iperf.exe” specified by the FCC is streamed from the PC 2 through the master and the client device to the PC 1 and played in full motion video using Media Player Classic Ver. 6.4.8.6 in order to properly load the network for the entire period of the test.

e) When radar burst with a level equal to the DFS Detection Threshold +1dB is generated on the operating channel of the U-NII device. At time T0 the radar waveform generator sends a burst of pulse of the radar waveform at Detection Threshold +1dB.

f) Observe the transmissions of the EUT at the end of the radar Burst on the Operating Channel Measure and record the transmissions from the UUT during the observation time (Channel Move Time). One 15 seconds plot is reported for the Short Pulse Radar Type 0. The plot for the Short Pulse Radar Types start at the end of the radar burst. The Channel Move Time will be calculated based on the zoom in 600ms plot of the Short Pulse Radar Type

g) Measurement of the aggregate duration of the Channel Closed Transmission Time method. With the spectrum analyzer set to zero span tuned to the center frequency of the EUT operating channel at the radar simulated frequency, peak detection, and max hold, the dwell time per bin is given by: Dwell (0.3ms) =S (12000ms) / B (4000); where Dwell is the dwell time per spectrum analyzer sampling bin, S is sweep time and B is the number of spectrum analyzer sampling bins. An upper bound of the aggregate duration of the intermittent control signals of Channel Closing Transmission Time is calculated by: C (ms)= N X Dwell (0.3ms); where C is the Closing Time, N is the number of spectrum analyzer sampling bins (intermittent control signals) showing a U-NII transmission and Dwell is the dwell time per bin.

h) Measurement the EUT for more than 30 minutes following the channel move time to verify that no transmission or beacons occur on this channel.

TEST MODE:

Please refer to the clause 3.3

TEST RESULTS

☒ **Passed** ☐ **Not Applicable**

TEST DATA

Refer to the appendix report on the section 9

7. TEST SETUP PHOTOS

8. EXTERNAL AND INTERNAL PHOTOS

Refer to the test report No. CHTEW24010014

9. APPENDIX REPORT

APPENDIX REPORT

Project No.	SHT2307016301EW	Radio Specification	WIFI 5G
Test sample No.	YPHT23070163003	Model No.	iS-PF1
Start test date	2023-11-10	Finish date	2023-11-10
Temperature	25℃	Humidity	48.5%
Test Engineer	Xiangyu Wei	Auditor	Xiaodong Zhao

Appendix clause	Test item	Result
A	Calibration of Radar Waveform	PASS
B	Channel Move Time,Channel Closing Transmission Time	PASS

1. TEST CONDITIONS AND RESULTS

1.1. Calibration of Radar Waveform

Reference DFS test signal(Radar Type 0)	
5290MHz	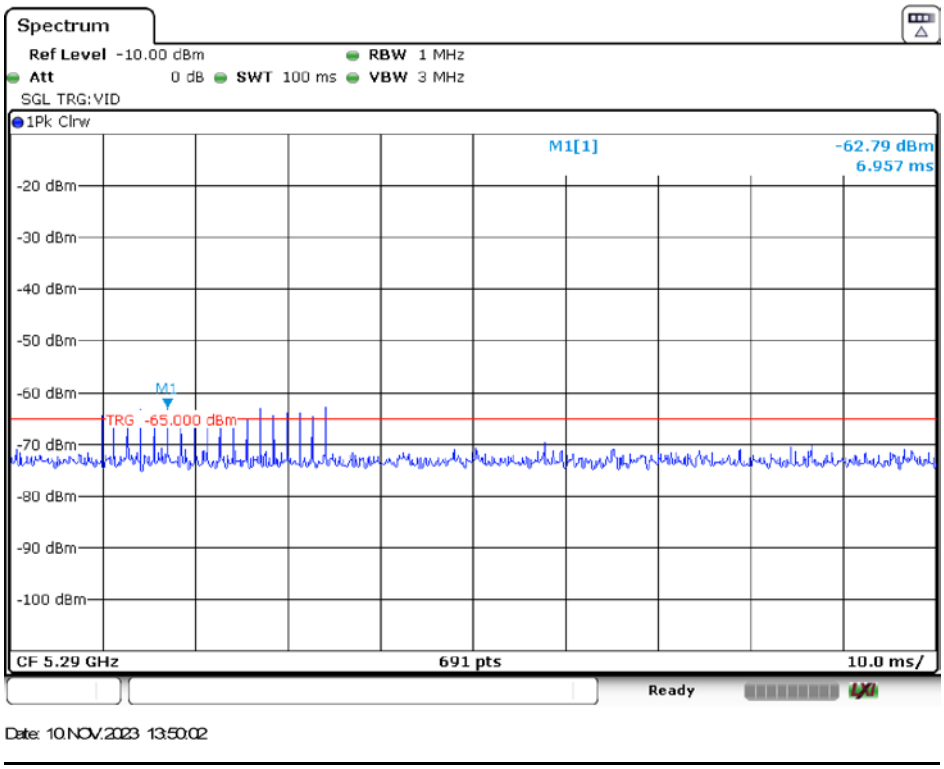

1.2. ChannelMoveTime, ChannelClosing Transmission Time

BW/Channel	Test Item	Test Result	Limit	Result
80MHz/5290MHz	Channel Move Time	2.03s	< 10s	Pass
	Channel Closing Transmission Time	11.09ms	< 60ms	Pass

Data Traffic Plot	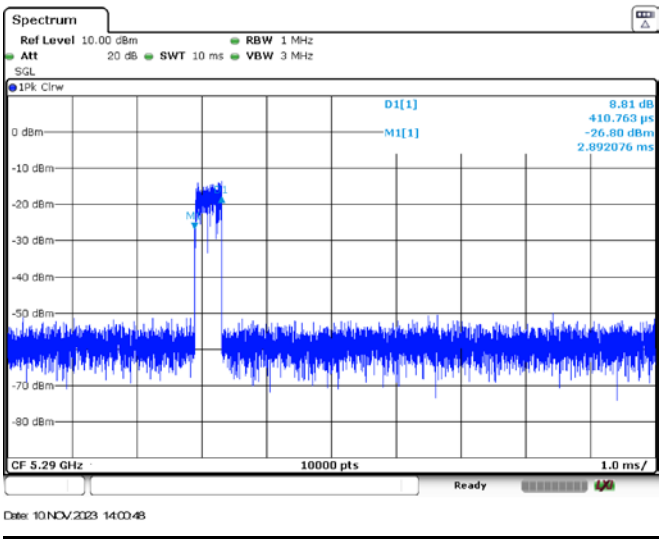

ChannelMoveTime& ChannelClosing Transmission Time	
80MHz/5290MHz	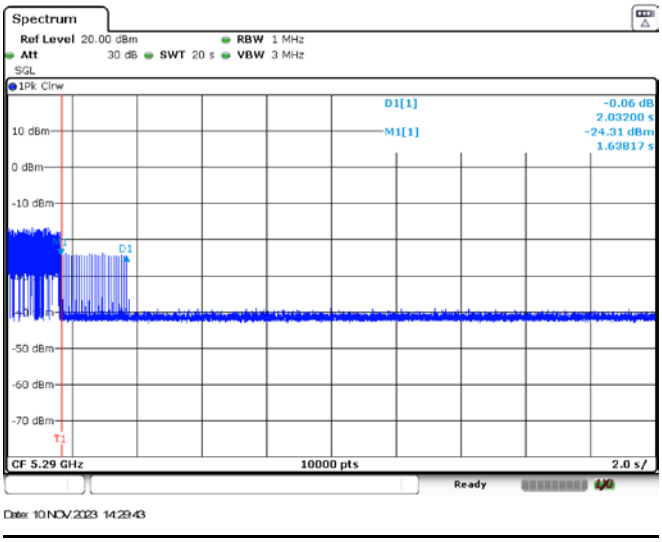

----------End of Report----------