FCC Statement
1.This device complies with Part 15 of the FCC Rules. Operation is subject to the following two conditions:
(1)This device may not cause harmful interference.
(2)This device must accept any interference received, including interference that may cause undesired operation.
2. Changes or modifications not expressly approved by the party responsible for compliance could void the user's authority to operate the equipment.
Note:This equipment has been tested and found to comply with the limits for a class B digital device,pursuant to Part 15 of the FCC Rules. These limits are designed to provide reasonable protection against harmful interference in a residential installation.
This equipment generates uses and can radiate radio frequence energy and,if not installed and used in accordance with the instructions,may cause harmful interference to radio communications.However,there is no guarantee that interference will not occur in a particular installation.if this equipmemt does cause harmful interference to radio or television reception,which can be determined by turning the equipment off and on,the user is encouraged to try to correct the interference by one or more of the following measures:
• Reorient or relocate the receiving antenna.
• Increase the separation between the equipment and receiver.
• Connect the equipment into an autlet on a circuit different from that to which the receiver is connected.
• Consult the dealer or an experienced radio/TV technician for help.
The device has been evaluated to meet general RF exposure requirement,This equipment should be installed and operated with a minumum distance of 20 cm between the radiator and your body.

MADE IN CHINA

Visit us at **www.mount-it.com** for product registration and warranty information.

Our US based customer service team is standing by to answer any questions you have about your Mount-It! product.

Available by phone **Monday - Friday from 5:00am - 5:00pm PST.**

Chat live with an agent on our website!

support@mount-it.com

(855) 925-5668

www.mount-it.com

MOUNT-IT!

Installation Manual
SKU: TZ-021W

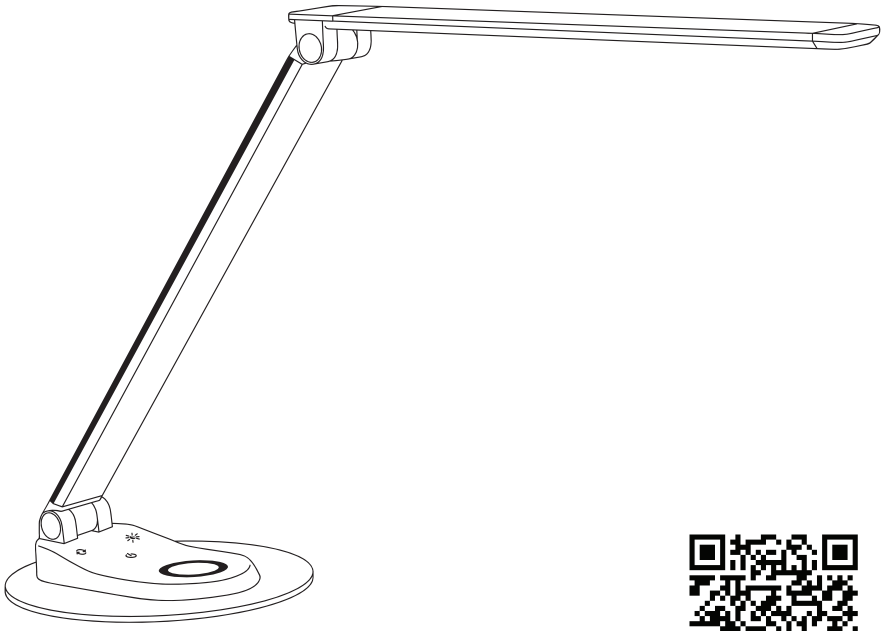

Please scan this QR code to visit the product page.

LED DESK LAMP WITH WIRELESS CHARGING

HAVE QUESTIONS?

Monday - Friday from 5:00am - 5:00pm PST

support@mount-it.com

(855) 925-5668

www.mount-it.com

Product Features

- Ultrathin, minimalist design
- Energy efficient LED
- 5 levels of adjustable color temperature and brightness
- Memory function
- Convenient USB C port

Package Contents

- 1 x LED Desk Lamp
- 1 x Power Adapter
- 1 x User Guide

Specifications

Model	TZ-021W
Operating Voltage	DC 12V / 3A
USB C Output	DC 5V / 2A
Power	9W
CRI Wireless Charger	>80
Wireless Charger	10W
Average Illumination	>= 750 Lux

Product Diagram

① Lamp Head
② Lamp Arm
③ Tension Adjuster
④ Color Temperature Button
⑤ Power Button
⑥ Brightness Button
⑦ USB C Port
⑧ Power Connector
⑨ Wireless Charger

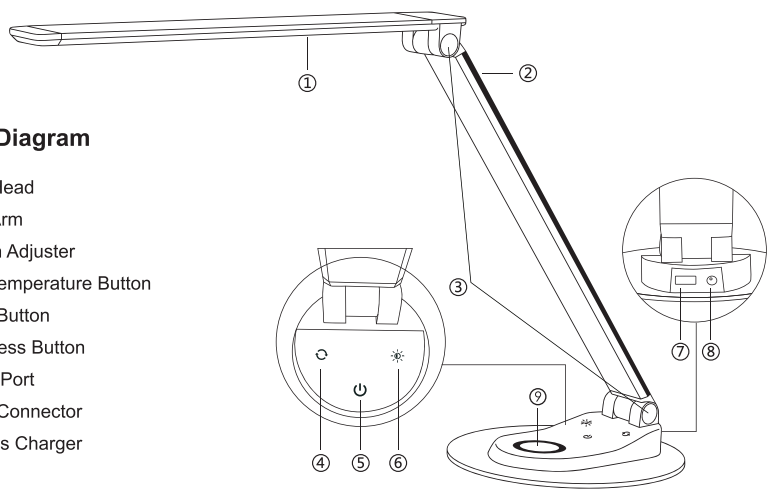

How to Use

Power Button

Tap the ⏻ to turn on / off the lamp. It will automatically remember your last brightness and color temperature selection when turned on.

Color Temperature Button

Tap the button to adjust and cycle through the 5 color temperatures.

Brightness Adjustment Button

Tap the button to adjust and cycle through the 5 levels of brightness.

Wireless Charger

Place a compatible phone on the charging pad to begin charging.

Caution

- Use only the supplied AC power adapter.
- Please do not dismantle the product by yourself, always ask a professional electrician or authorized technician for repairs.
- If you smell a bad odor or anything unusual, please turn off the unit immediately.
- Please do not remove the power plug with wet hands as it may cause electrical shock.
- It is not a toy. Keep away from children.
- Do not put this unit near any heat source or under direct sunlight.
- Clean the unit on a regular basis.
- Please store in a dry and shady place.

Troubleshooting Guide

Problem	Possible Cause	Solution
The lamp does not light up	No power supply	Plug in the power adapter
	Did not press the Power Button	Refer to the How to Use section
The touch panel is not responsive	Hands are wet	Tap the panel with dry hands
	Voltage fluctuation causing panel failure	Disconnect power to restart the lamp
LED failure	LED component failed	Please contact the Support Team
Bad smell	Power adapter failed	Please contact the Support Team
	Short circuited	Please contact the Support Team