ZATORI

ZATORI io	SNGL motor
ZATORI io+	Dual motor

ZATORI

www.zatori.io

Contact:

Whatsapp: +1 (702) 296 9225

Email: info@zatori.io

Instagram: @zatori_official

Facebook: @ZATORIworldwide

Hello Zrider!

Thank you for purchasing the ZATORI e-scooter. Till now, it is merely a first chapter for micro-mobility. Customer like you definitely fuel the development of this sustainable personal transport. We hope that you would enjoy the ride and share the joyful experience with your beloved one, leading to a brighter and greener generation.

How to get help?

We're always here to solve any technical or engineering issue. Please free feel to contact our supporting center or ZATORI official retailer.

Content

Specifications P.4
Unboxing
Assembly
Testing
Charging
Folding
Operation
Display
Settings
Battery Information
General Safety
Maintenance
Errors
FAQs
Warranty
Certification

Specifications

	Items	**io SNGL motor**	
Color		Off-white	
Dimensions	Unfolded (L*H)	1210mm * 1220mm	
	Fold (L*H)	1210mm * 510mm	
	Handle width	540mm	
Weight	Net	20kg	
Rider	Weightload	Max 120kg	
	Recommended age	16 or above	
	Required height	4'5" - 6'6" (140-200m)	
Machine parameters	Max speed	20mph (32km/h)*	
	Typical range	34miles (54km)	
	Incline rage	10 degree	
	Operating temperature		
	Storage temperature		
	IP rating	IP55	

Specifications

	Items	**io SNGL motor**	
Battery	Nominal voltage	36V	
	Max. charing voltage	42V	
	Nominal capacity	15Ah	
	Battery management syster	Over-heating, short circuit, over-current and over-chrage protection	
Motor	Nominal power	400W	
	Max power	750W	
Charger	Output power	84W	
	Input voltage	100V-240V	
	Output voltage	42V, 2.0A	
	Charging hour	6hours	
Features	Brake light	Rear brake light	
	Turning light	Handlebar and rear light	
	Riding mode	Eco / Comfy / Sport	

Unboxing

Please inspect the contents of your Zotari package to ensure all items are present and free of any defects:

- Zotari io/Zotari io+ Scooter
- User Manual
- Charger and Charging Cable
- Hex Key
- NFC card and spare card

If any components are missing or damaged, please immediately contact your Zotari dealer or our customer support center for assistance.

Once you have verified all included parts are in good working condition, please follow the provided instruction manual to properly assemble your Zotari electric scooter before first use.

We hope you enjoy your new Zotari scooter! Please reach out to us directly if you have any issues getting started so we can quickly resolve them.

Please retain the box and packaging material in case you need shipment to supporting center or retailer.

Assembly

Unfolding

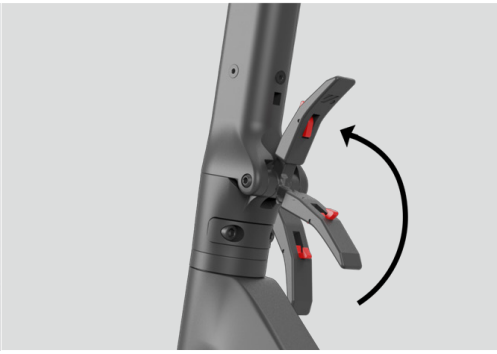
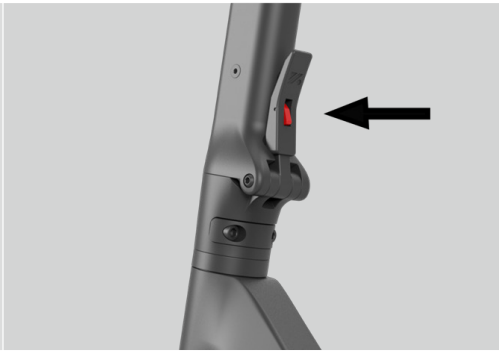

1. The first step is to unfold your zatori e-scooter.Unfold the stem by pulling it to a vertical position.

2. Lock the stem position by our safety folding latch on near the front fender. Please make sure the stem is fully locked with a “click” sound.

3. Finally, ensure that the safety button of the folding mechanism is securely fastened to the stem. This safety feature prevents the latch from accidentally unlocking due to vibration or shock.

Assembly

Attaching handlebar

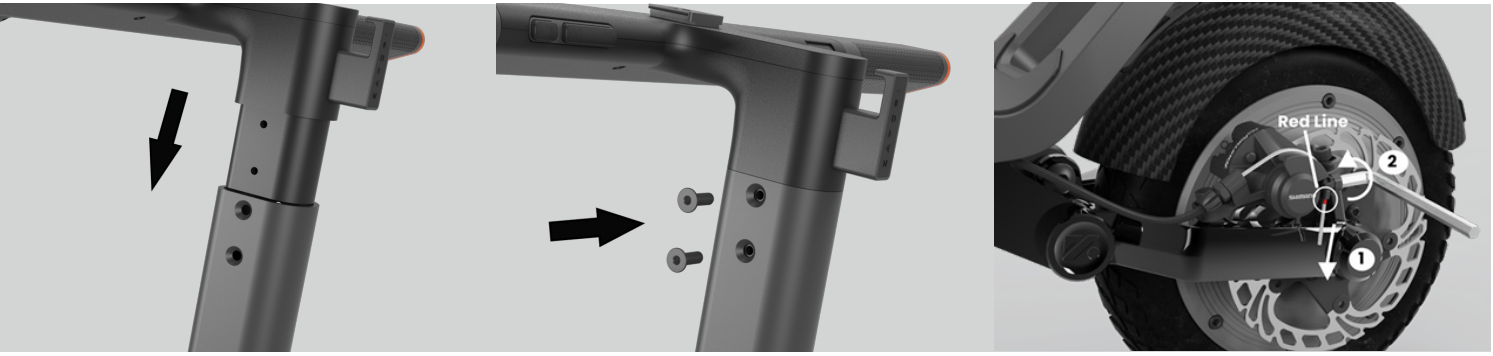

1. Make sure the primary port and secondary port are aligned properly.

2. Insert the handlebar at the top of the front stem and tighten into place with the hex screw provided.

3. Pull the rear brake cable until you see the red line indicator appear. Hold the cable in place and tighten the hex screw.

Caution: Make sure that the hex screw completely tightened for your riding safety.

Testing

Motor and Brake system

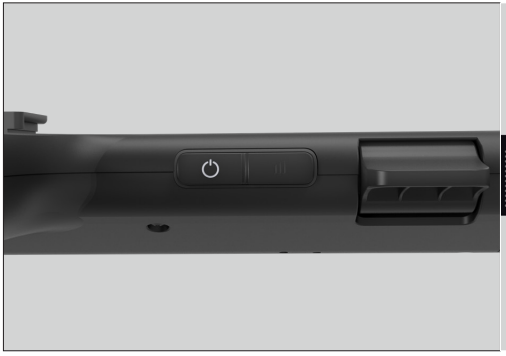
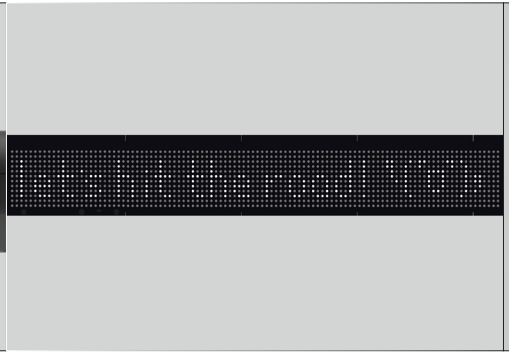
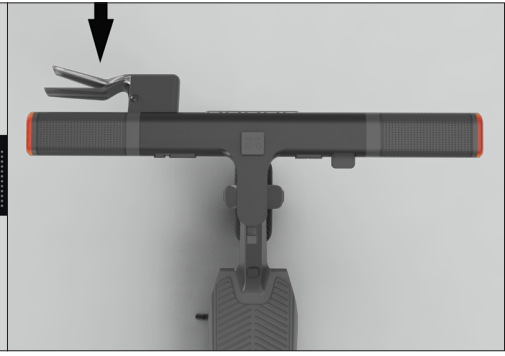

1. Turn on the e-scooter by pressing on the power button located at the right hand side of the handrail, nearest the stem. (Please press it from 2-3 second until a beep sound and the dot matrix on the handrail)

2. Check that “Let's hit the road” matrix display on the handrail.

3. Now test your brake. Press the throttle on the right hand side of the handrail. Please be careful that the e-scooter should be accelerated as slowly as possible. After accelerating for 5 second, then release the throttle and slam you brake slowly. The wheel should stop gradually.

Testing

Turn Signals

1. Locate the directional light on left hand side of the drop-shaped handrail.

2. Press the left side button to activate the left turn signal.

3. Press the right side button to activate the right turn signal.

E-scooter Horn

1. Locate the horn on the left hand side of the handrail.

2. Press the horn button to sound the horn.

3. The horn should product a loud and distinct sound.

Please note that the use of the horn should be limited to warning others of immediate danger and should not be used excessively or as a means of aggression or annoyance.

Charging

This section focuses on the battery of the ZATORI e-scooter and how to charge it properly. For more details, please visit our ZATORI official website or contact ZATORI supporting center.

ZATORI e-scooter, for both ZATORI io and ZATORI io+ model, consists of rechargeable lithium-ion battery equipped with overcharging protection. The charging cord is included in as well.

Please note that the overcharging protection only applies to short period of overcharging, i.e. charging the scooter in overnight. Please do not leave the e-scooter charging for a extended period of time as it may lead to overheat or battery damage.

We recommend Zrider charging ZATORI e-scooter with our official charging cord for maximizing the battery life. If the cord is lost, please purchase it from our official retailer or on our website.

Charging

Procedure

1. First, ensure the two parts of the charger are connected securely. The wall AC plug with be connected to the charger box. The connection between cable and the box should be feel firm with no wobble.

2. Plug the AC plug into a power outlet.

3. Next, locate the charging port cap on your scooter and open it to find the charging port. The charging port cap, in square shape, is between the folding and the deck. Please gentle insert the cable.

Charging

Procedure

4. Please note that a green charging light on the charger box indicates the e-scooter is charging.

Folding

Instruction

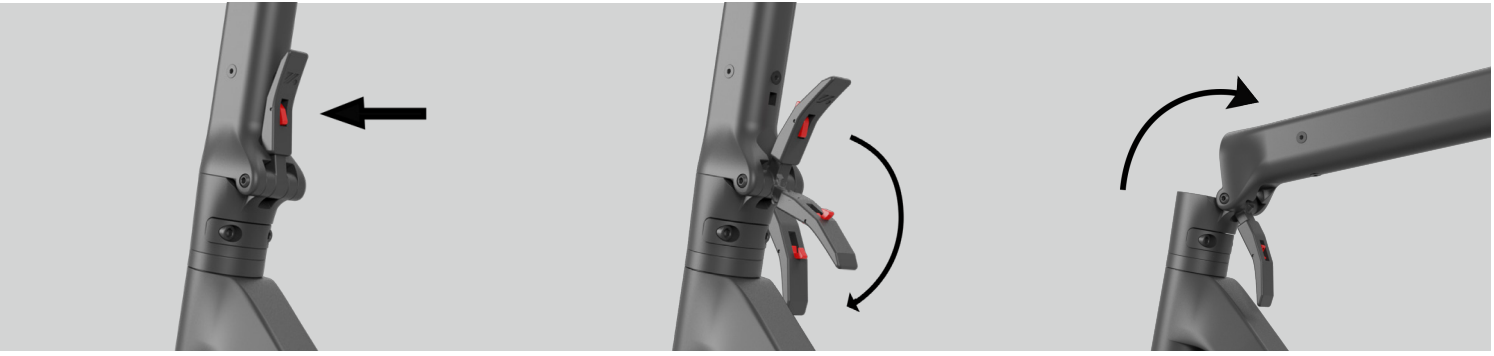

1. To initiate the folding process, locate the safety button and press it to unlock the folding lever.

2. Grasp the folding latch and pull it downward to fold the stem. Ensure that you maintain a firm grip on the stem throughout, as it will swiftly drop down once the folding latch is released.

3. Continue pulling the folding latch downward until you feel that the latch is completely open.

Folding

Instruction

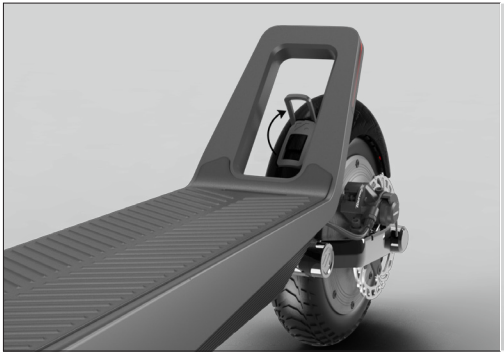

4. Leave the locking ring in an elevated position.

5. Proceed to fold the stem downwards, directing it towards the foot stand.

6. Connect the hook on the stem to the locking ring situated at the end of the deck, in close proximity to the footrest and rear wheel. Attach the hook securely to the locking ring.

Operation

Handlebar

This ZATORI e-scooter comes with a series of responsive button on our handlebar, not to mention the sophisticated dot matrix display. We would fully explain this feature.

E-scooter Horn

ZATORI should use the horn "BEEP" as warning or signalling purpose. It can alert other drivers, pedestrians for potential danger.

Turn Signals

The lights are used to signal the rider's intention to turn or change lanes, alerting other riders, pedestrians, and vehicles of the rider's intended direction.

Note:

Please note that the use of the horn should be limited to warning others of immediate danger and should not be used excessively or as a means of aggression or annoyance.

Operation

Power Button

Press it from 2-3 secs for power on and offthe e-scooter. Please press it until the "BEEP" sound.

Mode Button

Press it for switching the riding mode to turn up the speed limit.

Accelerator Throttle

Gradually press it for acceleartion within the speed limit.

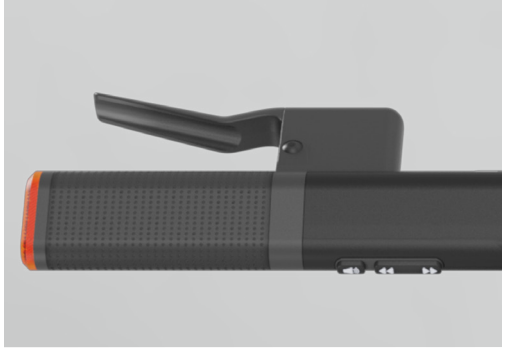

Wire Brake Throttle

Gradually pull the it for slow down or stop the moving e-scooter.

Display

Dot Matrix Display

It consist of over hundreds of delicate LED light on the handrail. It gives a clear vision of e-scooter status. The followings explain the display.

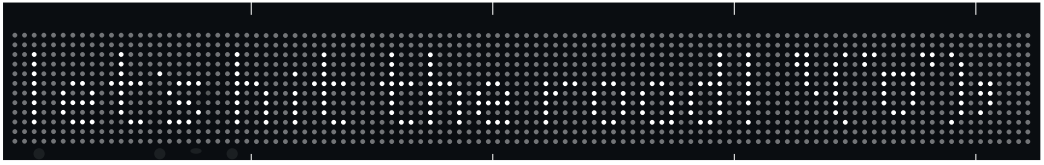

Indicating that the e-scooter is on and ready to go.

Indicating that the e-scooter is off.

Display

Dot Matrix Display Active state

During operation of your e-scooter, the ZATORI dot matrix display will provide you with the latest information. This display is designed to keep you informed and updated during your ride, allowing you to easily monitor essential metrics: Speed, Battery gauge, Bluetooth connection, Dual motor, Walking mode and Gear.

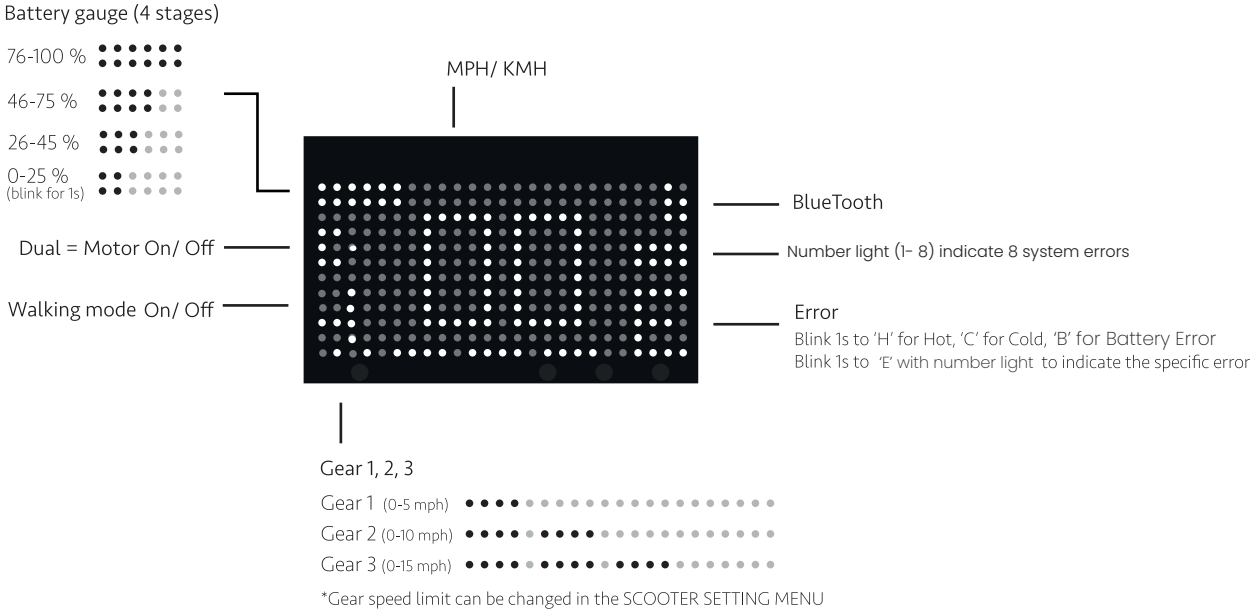

Setting

ZATORI NFC Card

A ZATORI NFC card is equipped with the e-scooter. For maximum security, each ZATORI card can only access to one scooter only.

1. Tap the card to unlock the card motor.

If the card is lost, user may contract our supporting center with the scooter number for a new purchase.

Speed Limit

We set up three speeding limit for both single motor and dual motor:

Gear 1 Eco mode: 0-6mph (0-10km/h)
Gear 2 Comfy mode: 7-12mph (11-20km/h)
Gear 3 Sport mode: 13-20mph (21-32km/h) or 13-28mph (21-45km/h)

Setting

ZATORI App

Meet your personal assistant, ZATORI App!

ZATORI App is your new personal assistant that will help you get the most out of your e-scooter. With our app, you can easily navigate through the city, find the nearest charging station, and control your speed for a smooth ride.

How to get ZATORI App?

1. Install ZATORI App from Apple app store or Google play

2. Create a ZATORI account

3. Turn on the bluetooth and connect your e-scooter with mobile phone

E-scooter pairing QR code:

Setting

ZATORI App

Homepage features:

User name
Battery status
Bluetooth connection
(Un)lock e-scooter
Walk Mode
Scooting miles
Estimated scooting distance
Google map navigation

*** Zriders can only access to the google map when they are riding.

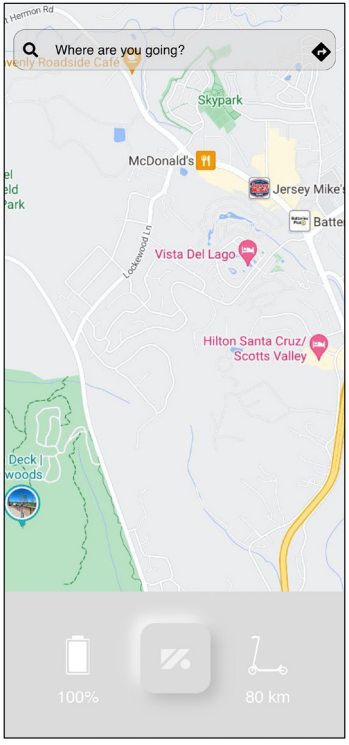

Setting

ZATORI App

After connecting the ZATORI e-scooter via bluetooth, Zrider can adjust the scooter setting on the mobile app.

Accessible setting:
Display unit
Profile
Auto-off timer
Bluetooth Passcode Reset
Factory Reset
Account Logout

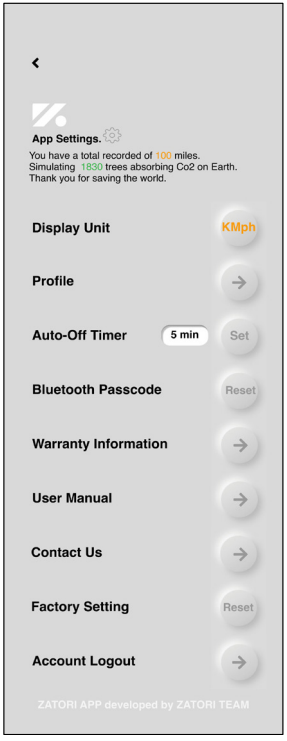

Battery information

Charging

Suggest fully charging before the first ride and after every ride.

During the charging, a green charging light on the charger box indicates the e-scooter is charging. The dot matrix should show a charging signal as well.

The charging process will then be complete and all cells will have been balanced by the equipped battery management system.

If not used, powen on the scooter at least one a month to check the charging level. Ideally, the power level should between 70% - 90%.

Storage

The ideal storage temperature should be between 10*C-25*C.

For long term storage (i.e. winter season), the ideal battery level is approximately 70% due to the fact that the power inside the battery cell is the most stable.

Battery information

Caution

Do not store ZATORI e-scooter in cold environment (i.e. unheated garages or outdoor sheds)

Avoid leaving the battery undercharged more than 48 hours.

Do not use unofficial charger sold from third parties.

Keep the battery away from heat or fire to avoid serious injury or even death.

If you observe any damage to the battery, or if the scooter fails to turn on after charging or charge the battery, please do not attempt to operate the scooter. Instead, please contact our supporting center for assistance.

Suggestion

When there is one bar battery left, we recommend Zrider to stop using it if possible and recharge it for maintaining the battery life.

A deep discharge may decrease the lifespan of the battery.

General Safety

Warning

Improper assembly, maintenance, or use of your ZATORI e-scooter may result in component or performance failure, loss of control, serious injury, or even death. It is definitely necessary that you read and comprehend the entire manual and any accompanying documentation related to subcomponents or accessories before riding, even if you are an experienced scooter rider.

In the event of any malfunction of the components during setup or use, please stop setup or use immediately and contact our support center.

If you are unsure of your experience, skills, and tools to correctly perform all assembly steps as outlined in the manual and assembly video at ZATORI..io, we recommend that you consult our support team or a local electric scooter expert.

Road Safety and Legislation

Before riding, you are assumed an full understanding of countries' traffic laws and road safety risk. You are responsible to perform due diligence, understand and follow the law consciously, for the safe and lawful operation of electric scooter, in the locations which you choose to operate.

General Safety

Protective Gear

We highly recommend wearing protective equipment any time the scooter is in use, no matter e-scooter beginners or experts.

Important

DO NOT ride under influence of any drug, alcohol or substance that could impair driving ability or deprive attention.

Education:

Please read this manual carefully and ensure a full understanding of the riding legislation.

For any uncertainties about any section, please contact us directly by email to support@zatori.io or visit our website www.zatori.o.

We strongly encourage user starting slow and getting used to the scooter before increasing the speed limit

General Safety

Age

ZATORI e-scooter only suitable for person over 16 only.

For diabilited or impaired person (ie, visual, hearing, language or seizure), please consult professionals before any ride or purchase of electrical scooter.

Maintenance

Getting Started

We highly recommend doing a maintenance to your scooter every 6 month to ensure the best quality of riding experience. User may view the maintenance tutorial video on ZATORI website or ZATORI youtube channel.

Below is the basic maintenance on the ZATORI e-scooter. For more details, please contract our ZATORI supporting center or visit our official website www.zatori.io.

Basic Maintenance

Tire pressure

Screw tightening

Maintenance

Basic Maintenance: Tire Pressure

ZATORI Tire Specifications

Pneumatic tires
Size: 2*10 inch
Pressure: 40 - 60 psi (pound per square inch)

Required Tool

Tire pressure gauge
Pump
Valve adapter
Wrench

Why?

Maintaining the correct tire pressure is important for several reasons. First, it can help to ensure that the e-scooter rides smoothly and handles well. Second, it can help to extend the life of the tires by reducing wear and tear. Finally, it can help to improve the efficiency of the e-scooter by reducing rolling resistance, which can increase the range of the scooter on a single charge.

Maintenance

Basic Maintenance: Screw Tightening

ZATORI E-scooter Screw Specifications	Required Tool
Hex cap screw	Hex shape L shape screwdriver

Why?

Over time, vibrating, accidental scooter crush, or significant temperature change may loosen the screw around the stem, deck and handrail. It is important to regularly check and tighten the screw and bolts, especially if it has been stored for a long period of time.

Error

Error Coding

ZATORI has already build a simple coding system in our e-scooter, allowing user to diagnose the error easily. Please take reference to the following table for the definition of the code displaced in dot matrix form.

Note

For more details, please visit our official ZATORI website or contact our supporting center: www.zatori.io.

FAQ

Warranty

Once again, thank you for purchasing our ZATORI e-scooter. We stand behind the quality and performance of our products, and we offer a warranty to protect your purchase.

Warranty Period

The warranty period starting from the date of purchase. Please note that each component of the e-scooter may have a different warranty period.

For e-commerce orders, the start time of the warranty period is based on the delivery date of the product to the customer.

Warranty Submission

The followings are required for submitting a warranty claim:

Purchase proof from the authorized retailer/ dealer

Product serial number

Consumer's name, phone number, email address and billing address

Reason for product return

Warranty

Mechanical Parts	**Coverage Period**
Frame	**12 Months**
Stem	
Handerbar	
Folding Latch	
Fork & Neck Assembly	
Electrical Parts	**6 Months**
Throttle	
Controller	
Motor and Motor Hub	
Lithium Battery	
LED Lights	

Warranty

Wear & Tear	Coverage Period
Fender	**30 Days***
Kick-stand	
Brake calipers	
Brake discs	
Charge Socket Cover	

*The following components are covered by the warranty only if defects are reported within 30 days of receiving the scooter.

NOTE: This equipment has been tested and found to comply with the limits for a Class B digital device, pursuant to part 15 of the FCC Rules. These limits are designed to provide reasonable protection against harmful interference in a residential installation. This equipment generates uses and can radiate radio frequency energy and, if not installed and used in accordance with the instructions, may cause harmful interference to radio communications. However, there is no guarantee that interference will not occur in a particular installation. If this equipment does cause harmful interference to radio or television reception, which can be determined by turning the equipment off and on, the user is encouraged to try to correct the interference by one or more of the following measures:

- Reorient or relocate the receiving antenna.
- Increase the separation between the equipment and receiver.
-Connect the equipment into an outlet on a circuit different from that to which the receiver is connected.
-Consult the dealer or an experienced radio/TV technician for help

Changes or modifications not expressly approved by the party responsible for compliance could void the user's authority to operate the equipment.

This device complies with Part 15 of the FCC Rules. Operation is subject to the following two conditions:
(1) this device may not cause harmful interference, and (2) this device must accept any interference received, including interference that may cause undesired operation.

Certification