MANUAL E-MTB SANN
[EN]

Rev. 1.1

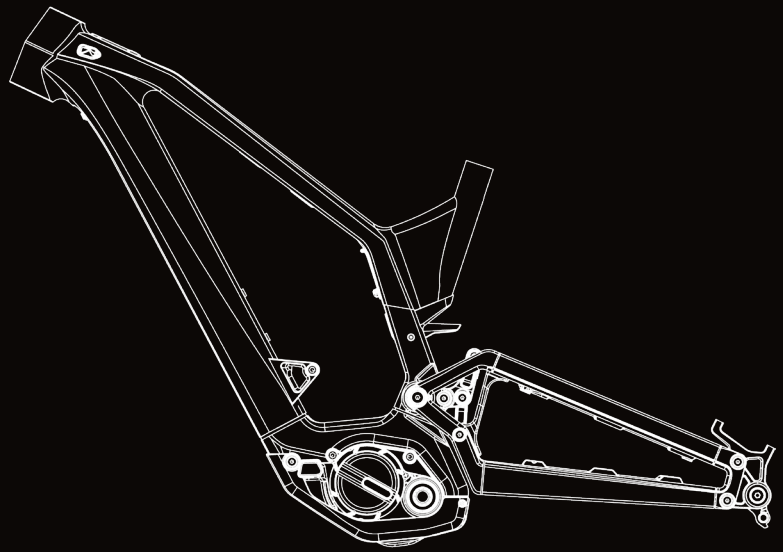

HYBRIDIZER

Hybridizer SANN Frame Manual

1. Introduction

Thank you for choosing the Hybridizer e-mountain bike.
We hope to provide you with a completely new riding experience. To better understand and use this product, we recommend that you carefully read this manual.

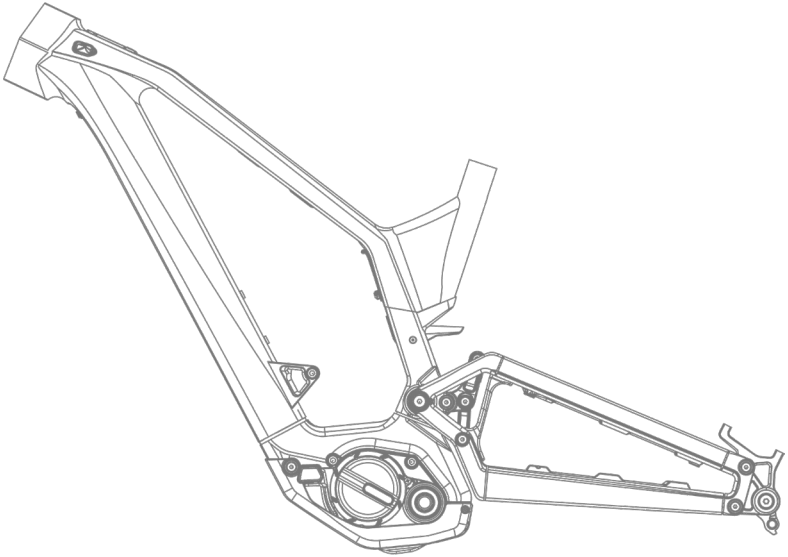

• Package Contents

Name	Quantity
Frame Set	1 set
Charger	1 set
29-inch Frame Conversion Kit	One pair (Left and Right)
Bottom Bracket Height Adjustment Shims	One pair (Left and Right)
Cable Clips (3 lines)	4 pieces
Cable Clips (2 lines)	4 pieces
Control Button	1 piece

• Specifications Introduction

Performance Parameters	
Name	SANN
Manufacturer	Hybridizer
Frame Code	MP21
Frame Material	AL6061
Rider Weight Limit *1	110kg

*1: This weight includes the total weight of the rider and their carried equipment.

Motor Performance Parameters	
Motor Code	M510
Manufacturer	Bafang
Rated Power	350 W
Voltage	48 V
Maximum Torque	95 N.m
Maximum Supported Pedal Cadence	145 RPM
Motor Weight	2.9kg

Battery Performance Parameters	
Battery Pack Code	BT2472B0
Manufacturer	SYSMAX Power technology
Voltage	48V
Battery Capacity	15Ah 720Wh
Maximum Charging Current	6A
Battery Weight	3.4kg

Charger Performance Parameters *1	
Charger Code	S-164-546-03000H
Manufacturer	Dongguan Anju Electronic Technology Co., Ltd.
Charging Voltage	54.6V
Charging Current	3A
Time to Full Charge	4h(90%),6h(100%)
Charger Weight	600g

*1: These performance parameters are for the standard version.

• Geometry Introduction

This product consists of frame components that require assembly. The data in the table below represents the geometric angles in the designed and set state. It's important to note that there may be some variation in these angles when installing other components, even if components of the same specifications are used. The actual geometric angles may deviate due to differences in tire size, front fork, and other factors between different brands and models.

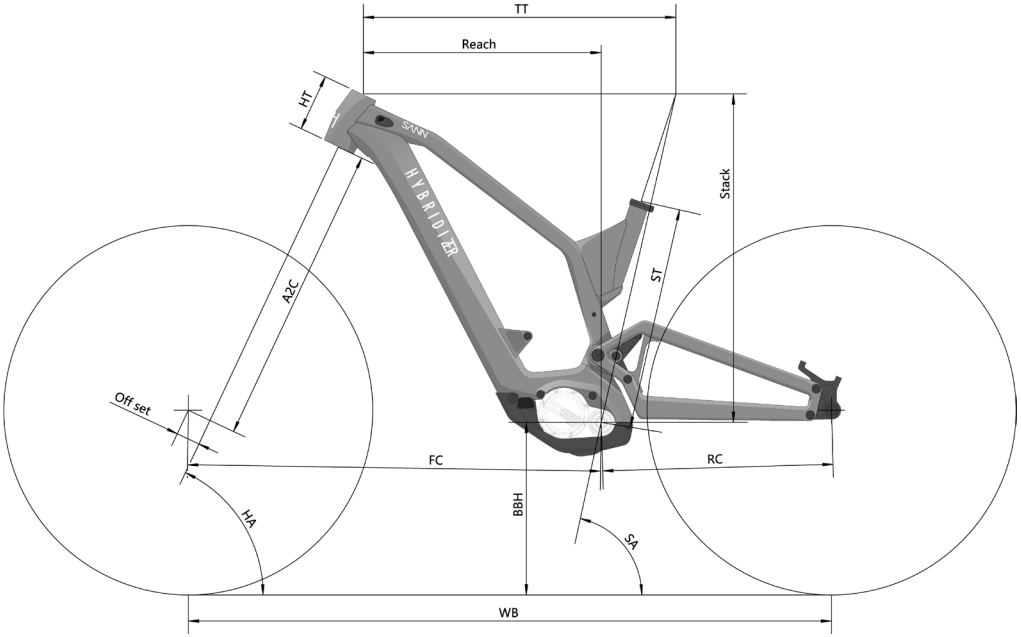

Frame Geometry (Mullet / 29er) *1									
Frame Size	S			M			L		
User Height	165-175			170-178			176-186		
BB High Setup *2	L	M	H	L	M	H	L	M	H
Head Tube Angle	63.8	64.2	64.6	63.8	64.2	64.6	63.9	64.2	64.5
Head Tube Length	100	100	100	110	110	110	122	122	122
Seat Tube Angle Effective	76.6	77	77.4	76.6	77	77.4	76.6	77	77.4
Seat Tube Length	420	420	420	430	430	430	440	440	440
Seat post insert	185	185	185	195	195	195	205	205	205
Top Tube Length Effective	578.5	577.2	576	605.6	604.3	603.1	628.1	626.8	625.6
Chain stay Length (27.5 rear wheel)	437.1	435	432.8	437.3	435	432.8	437.1	435	432.8
Chain stay Length (29 rear wheel)	457.1	455	452.8	457.3	455	452.8	457.1	455	452.8
BB Drop	12.1	7.3	2.4	12.2	7.3	2.3	12.3	7.3	2.3
Reach	431.1	435	438.9	456.2	460	463.8	476.2	480	483.8
Stack	619.6	616.9	614.2	628.7	625.9	623.1	639.6	636.7	633.8

*1: These geometric angles are under the following conditions:

1) Front fork travel is 170mm, A2C value is 582mm, offset value is 51mm.
2) In Mullet setup, the front wheel uses 29 x 2.35 (diameter 740.76mm), and the rear wheel uses 27.5 x 2.5 (diameter 710.51mm).
3) In 29er setup, both front and rear wheels use 29 x 2.35 (diameter 740.76mm).

*2: This vehicle allows for adjustable bottom bracket height to suit your needs. L, M, H represent low, medium, and high settings respectively. For more details, please refer to the optional geometry angle section in the instruction manual.

• Frame Specifications Introduction

Frame specification	
Rear Travel	164mm
Rear Shock Length	210x55 *1
Shock Hardware (front frame)	8x35
Shock Hardware (rear frame)	8x30
Rear Spacing	12x148
Rear Tire Clearance (27.5")	2.8" *2
Rear Tire Clearance (29")	2.6"
Seatpost Diamater	31.6mm
Headset	Semi-integrated 1 1/8" – 1,5" (44mm x 56mm)
Number of chain eyes	Dependent on capacity of rear derailleur and Cassette Size *3

*1: FOX Float X2 and ROCKSHOX VIVID AIR series cannot be used.
*2: Please ensure that the tire does not exceed a maximum width of 68mm.
*3: When determining chain length, make sure the rear derailleur is in the largest cassette cog position, and the rear shock is fully compressed, leaving some room for rearward positioning and tension. It is recommended not to exceed a maximum cassette cog size of 46T. If insufficient rearward positioning and tension cannot be avoided due to cassette selection, be cautious not to shift the chain to the largest cassette cog when the rear suspension is heavily compressed, as this may cause irreversible damage to the bike.

2. Setting up the bike

Before assembling, maintaining, or servicing the bike, make sure to wear the necessary protective gear and use the correct tools. Ensure that the connector at the bottom of the battery is disconnected from the battery itself. Assembling and maintaining a bicycle should be done by individuals with some experience. If you lack sufficient experience, it is advisable to seek assistance from a local bicycle repair shop.

Note: During the operation, Hybridizer will not assume any responsibility for personal injuries or property damage resulting from individual operation errors. Once again, before starting the operation, please confirm that the battery connector is disconnected from the battery itself.

• Bicycle Component Compatibility

Since we provide the frame assembly, other components need to be purchased and assembled by the rider to create a complete bike. To achieve optimal performance, we recommend using the following parts combination.

Recommended setting				
	Mullet	29er	Mullet+	27.5+
Front Wheel Size	29"	29"	29"	27.5"
Front Tire Wide	2.1-2.5	2.1-2.5	2.6-2.8	2.6-2.8
Rear Wheel Size	27.5"	29"	27.5"	27.5"
Rear Tire Wide	2.1-2.5	2.1-2.5	2.6-2.8	2.6-2.8
Front Fork Travel	170	170	160	180
BB High Setup	L / M / H	L / M / H	L / M *1	L / M *1

*1: At this setup, we do not recommend a high BB setup.

• Cable Routing

1. Rear Brake Cable Routing (Recommended rear brake cable length: 1.55~1.6m)

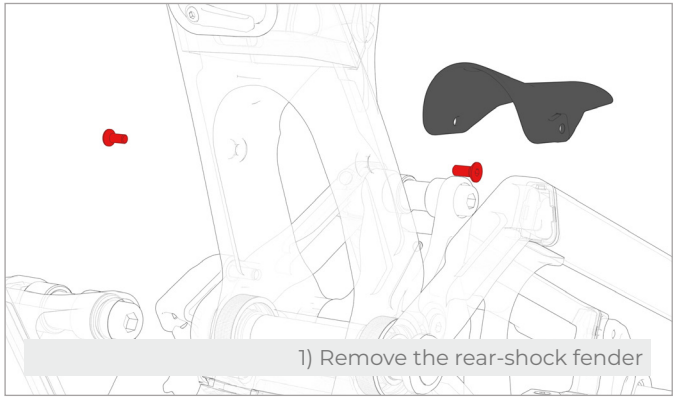

1) Remove the rear-shock fender

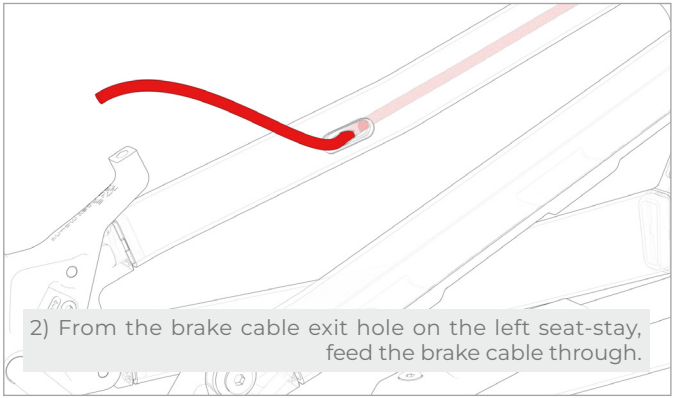

2) From the brake cable exit hole on the left seat-stay, feed the brake cable through.

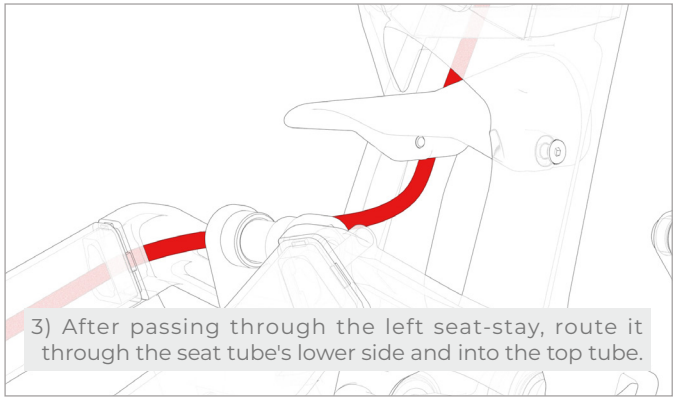

3) After passing through the left seat-stay, route it through the seat tube's lower side and into the top tube.

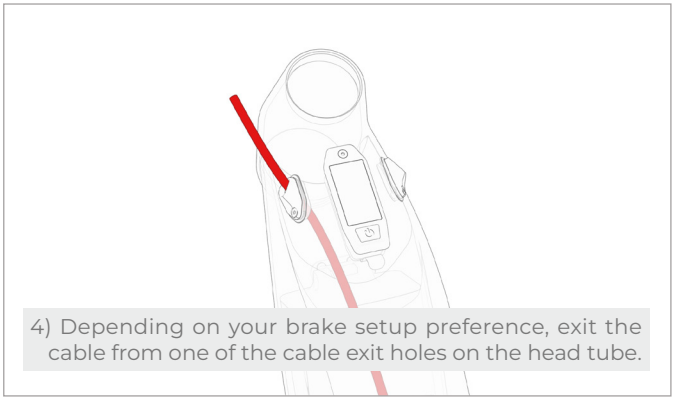

4) Depending on your brake setup preference, exit the cable from one of the cable exit holes on the head tube.

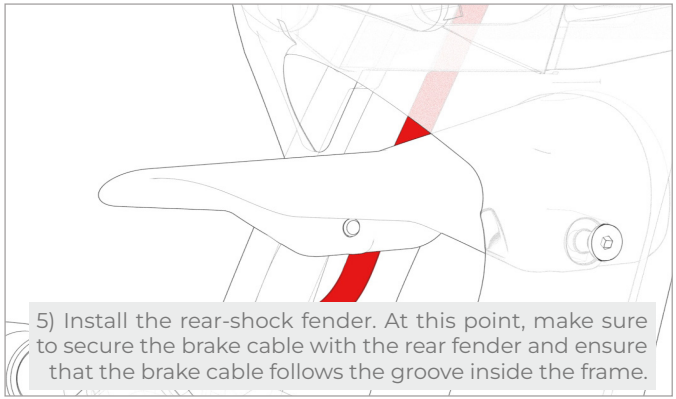

5) Install the rear-shock fender. At this point, make sure to secure the brake cable with the rear fender and ensure that the brake cable follows the groove inside the frame.

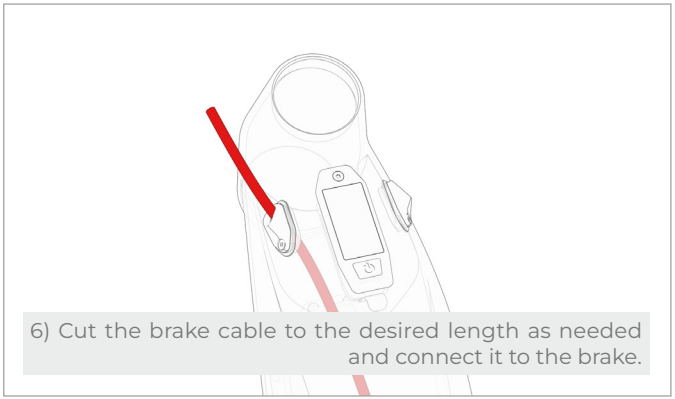

6) Cut the brake cable to the desired length as needed and connect it to the brake.

2. Dropper Seatpost Cable Routing (Internal Routing)

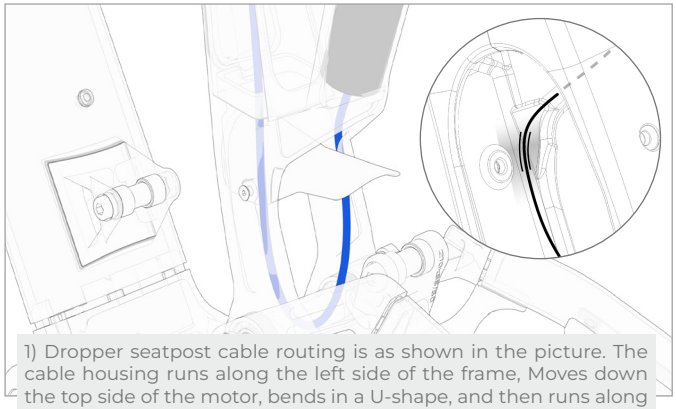

1) Dropper seatpost cable routing is as shown in the picture. The cable housing runs along the left side of the frame, Moves down the top side of the motor, bends in a U-shape, and then runs along the right side of the frame to connect to the dropper seatpost.

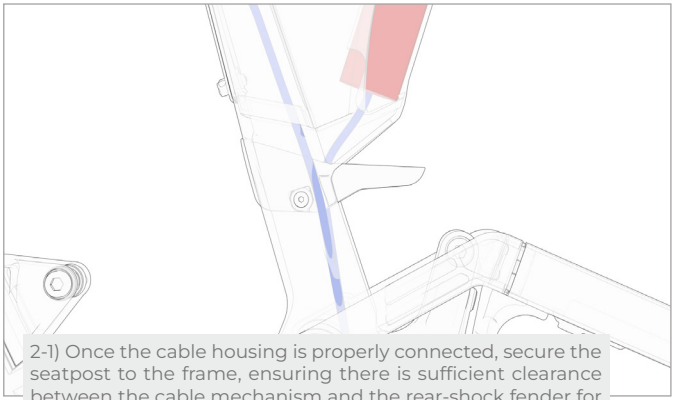

2-1) Once the cable housing is properly connected, secure the seatpost to the frame, ensuring there is sufficient clearance between the cable mechanism and the rear-shock fender for proper cable routing space.

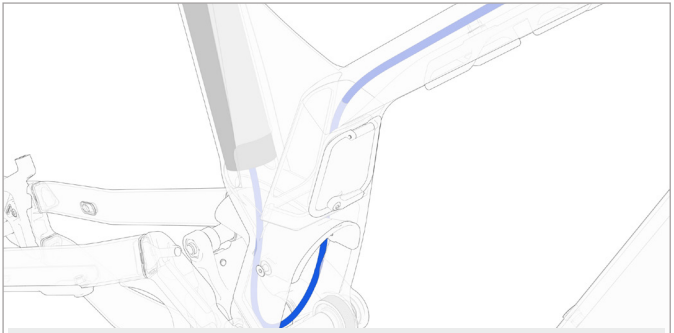

2-2) Use the rear-shock fender to hold down the left and right dropper seatpost cables, making sure the cable routing matches the picture.

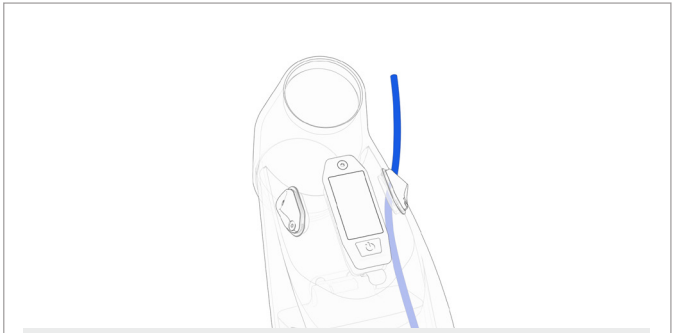

3) Depending on your preference, exit the cable from the cable exit hole on the right side of the head tube.

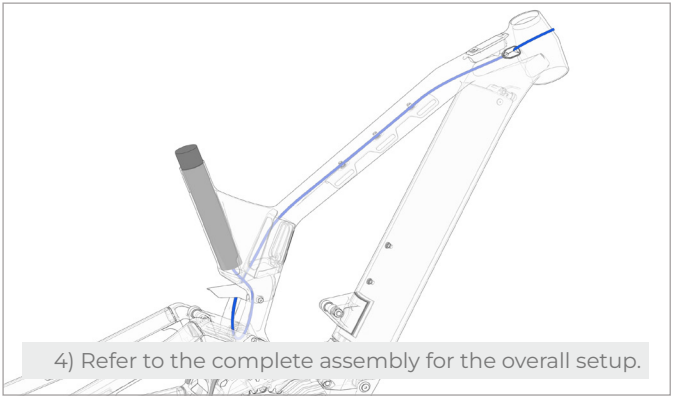

4) Refer to the complete assembly for the overall setup.

3. Rear Shifter Cable Routing (Recommended rear shifter cable length: 1.9m)

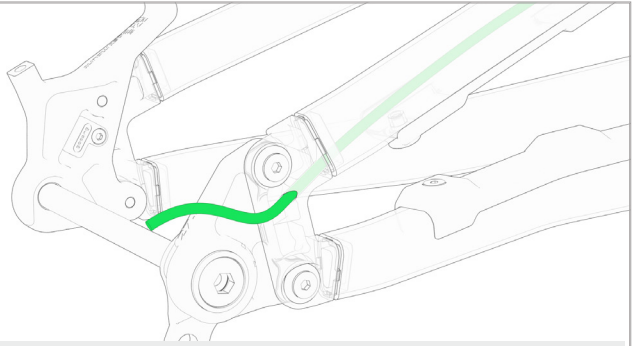

1) Pass the shifter cable through the hole near the rear axle.

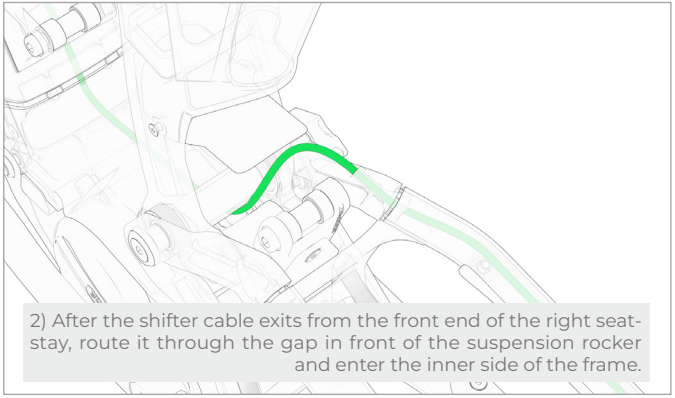

2) After the shifter cable exits from the front end of the right seat-stay, route it through the gap in front of the suspension rocker and enter the inner side of the frame.

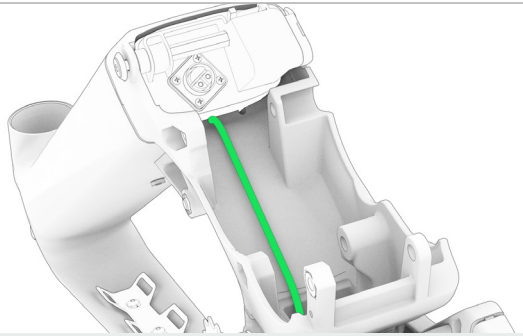

3) Pass it through the cable routing groove on the inner side of the frame, go through the down tube, and exit from the left side of the head tube.

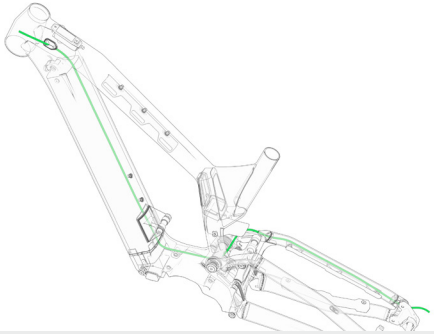

4) Refer to the complete assembly for the overall setup.

4. Install the speed sensor magnet

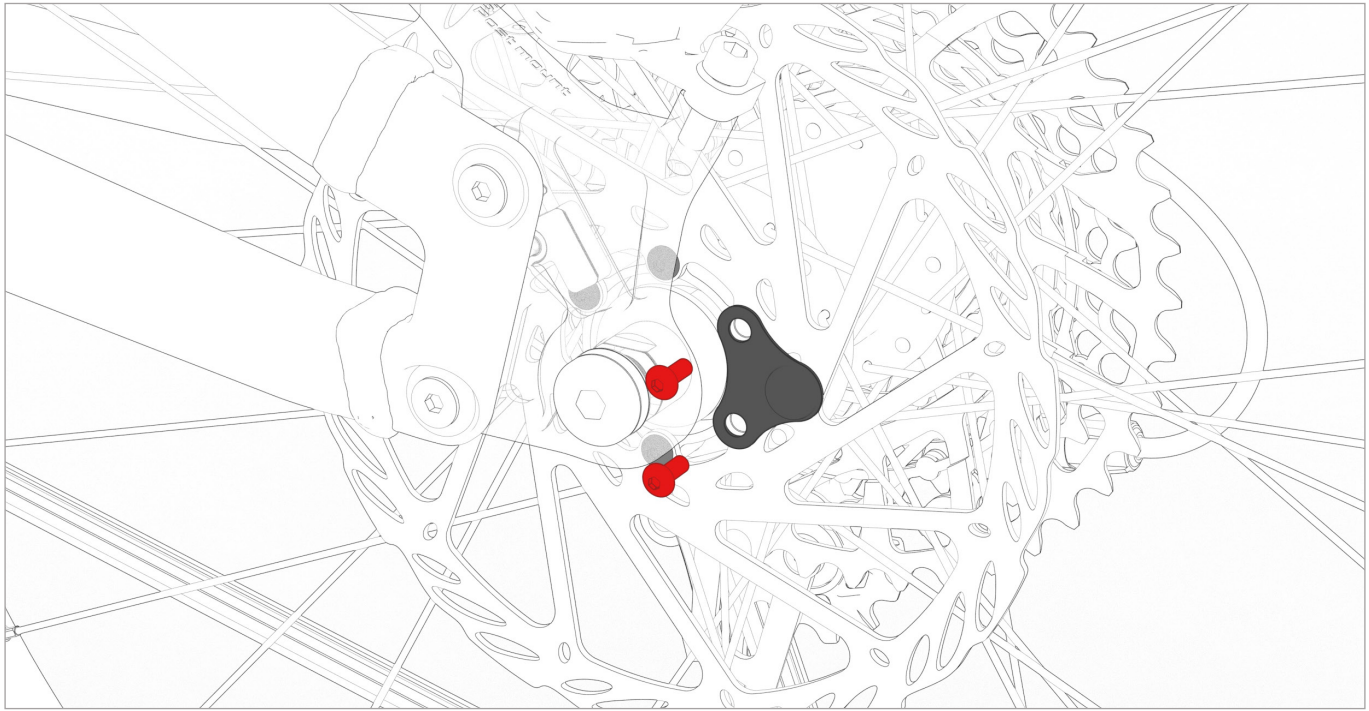

Install the speed sensor magnet onto the rear disc using two of the provided disc fixation bolts as shown in the picture. If you ride without installing the magnet, ERROR 21 will be displayed on the display.

5. Introduction to the electrical signal cable

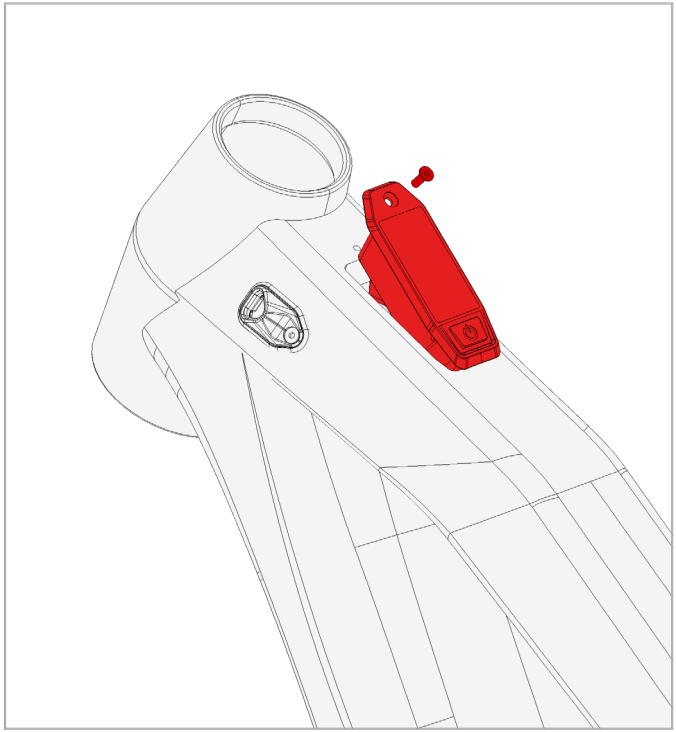

Picture 1

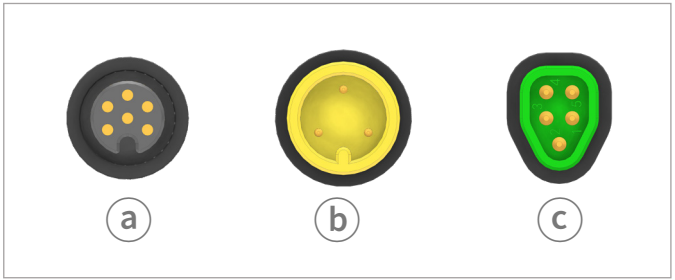

Picture 2

Using a 2mm hex wrench, loosen the display's fixed screw and remove the display's main body as shown in Picture 1.

After removing the display, you will see the connectors shown in Picture 2. Please refer to the following for connecting the connectors.

a. Instrument button connector (self-installation)
b. The connector reserved for additional plugin devices. *1
c. Instrument communication connector (factory-installed)

*1: If 'error 04' or 'error 05' is displayed on the screen, please check the status of the added device.

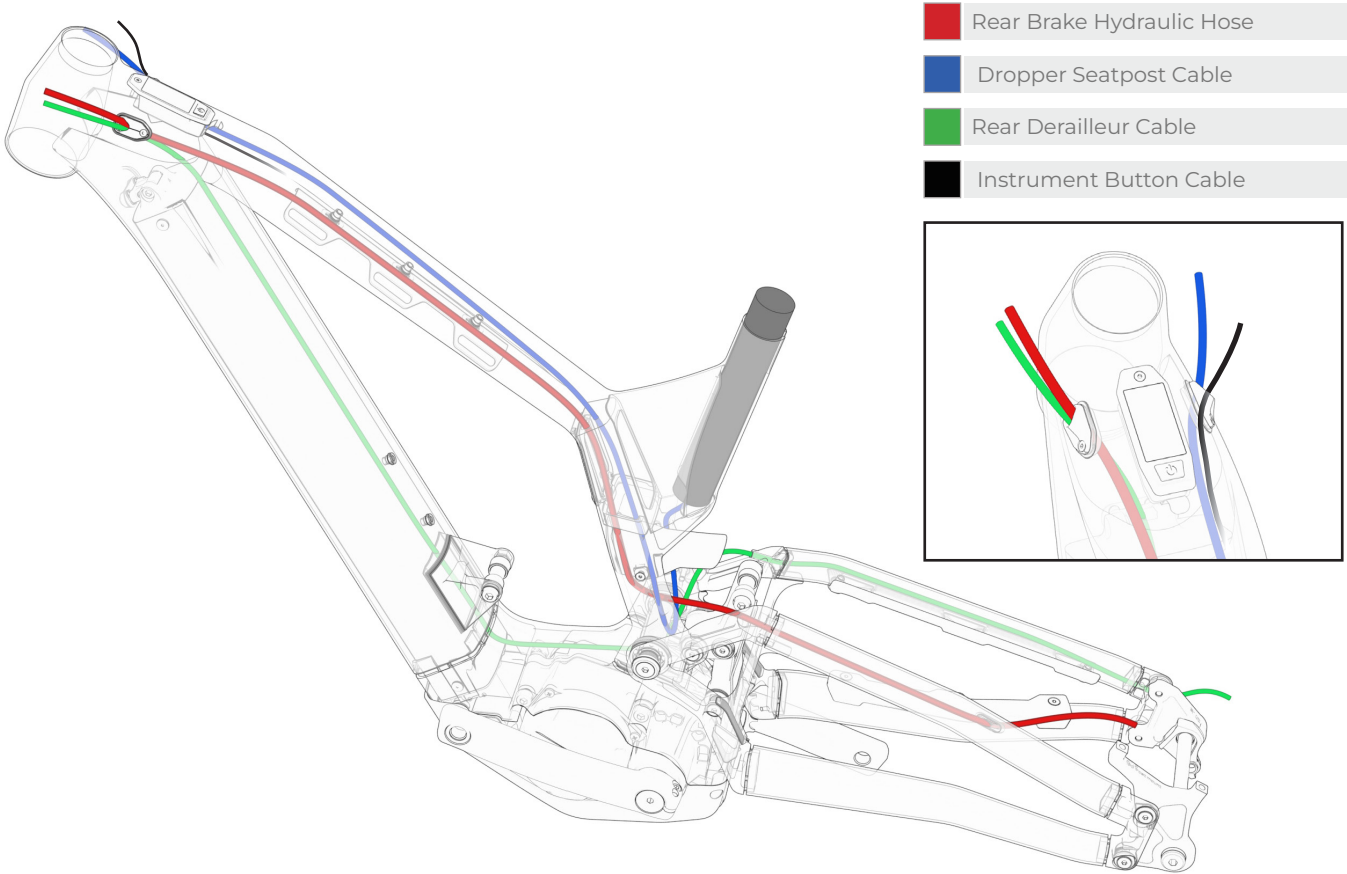
Rear Brake Hydraulic Hose
Dropper Seatpost Cable
Rear Derailleur Cable
Instrument Button Cable

• Optional Geometry

1.Rear wheel size conversion (27.5"/29")

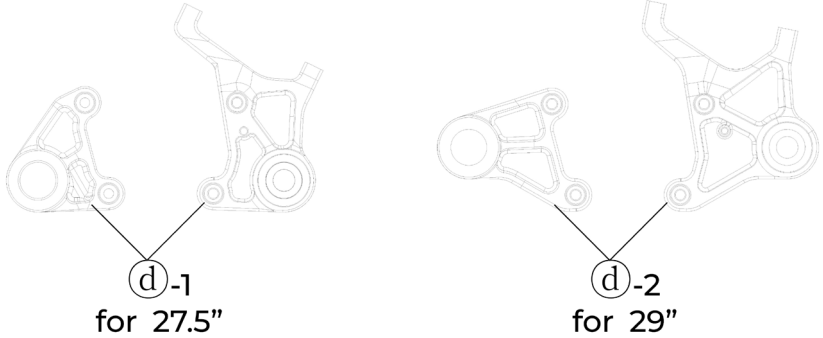

The SANN frame can be configured with two different rear wheel sizes, 27.5 inches and 29 inches, by changing frame components. These two configurations will result in changes to the bicycle's geometry angles; please refer to the vehicle geometry angles section for details.

Note: For 27.5-inch configuration, it is not recommended to use rear tires wider than 2.8 inches, and for the 29-inch configuration, it is not recommended to use rear tires wider than 2.6 inches.

I. Use an 8mm hex wrench to remove the drop-out hangger (UDH) fixing screw ⓒ and tighten it to a torque of 15N.m.

II. Use a 3mm hex wrench to remove the speed sensor fixing screw ⓑ and tighten it to a torque of 1.5N.m.

III. Use a 4mm hex wrench to remove the drop-out plates fixing screw ⓐ and tighten it to a torque of 15N.m.

IV. Assemble in the reverse order of the disassembly sequence.

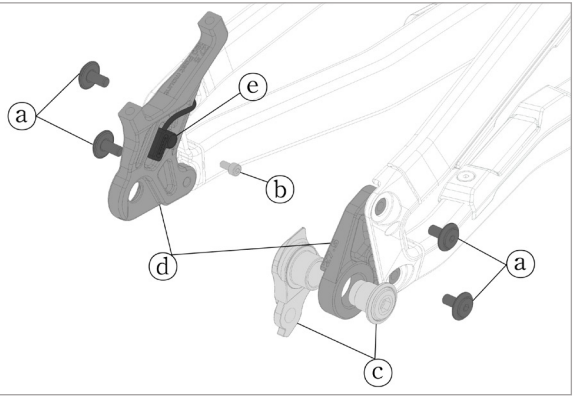

2. BB Height Axle Adjustment

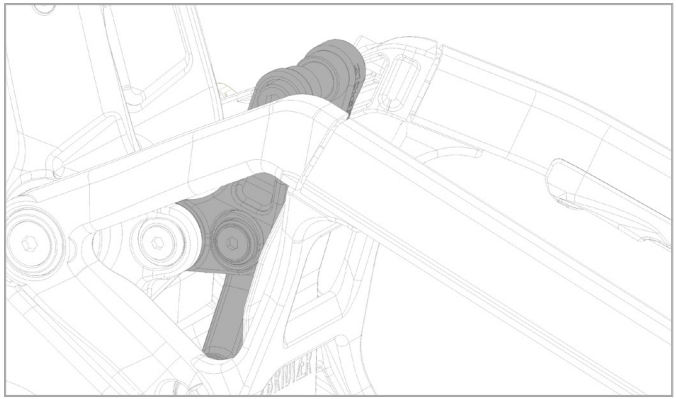

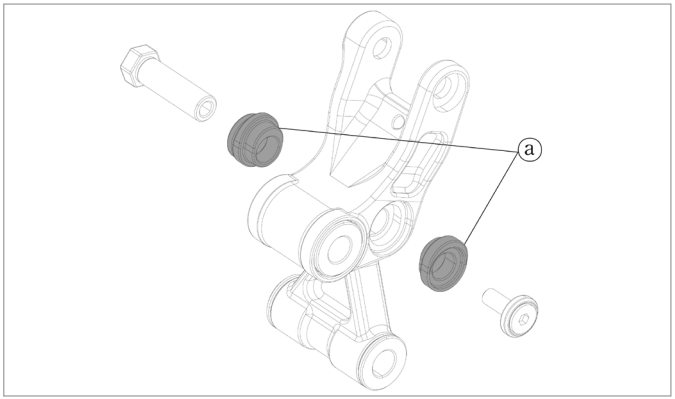

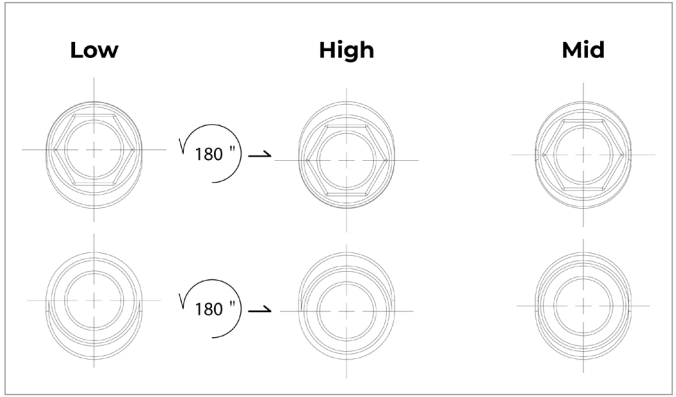

The SANN frame allows for the adjustment of three different bottom bracket heights by changing frame components, providing adjustment within a range of approximately 10mm to meet the user's requirements. Please refer to the bike geometry angles section for details.

I. Use a 4mm hex wrench to remove the adjustment block fixing screw ⓐ and tighten it to a torque of 15N.m.

II. After removing the entire axle, replace the flip-chips on the left and right sides as needed to change the bottom bracket height (refer to the left picture). Please ensure that the settings of the left and right flip-chips are consistent before assembly.

III. After assembly is complete, use a 4mm hex wrench to tighten the flip-chip's fixing screw ⓐ to a torque of 15N.m.

• Rear Shock SAG Setting

The SANN frame recommends a SAG range of 30% to 35%. It is recommended to use a coil spring rear shock or an air chamber volume air shock for the bicycle's rear suspension. For selecting the pound rating of the coil spring shock, please refer to the table below.

Spring rate recommendation		
Target SAG: 30~35		
Rider weight(kg)	Spring rate(Ib/in)	SAG(%)
55	450	33
	500	30
60	450	35
	500	32
	550	30
65	500	34
	550	31
	600	29
70	500	35
	550	33
	600	30
75	550	34
	600	32
	650	29
80	600	33
	650	31
	700	29
85	600	35
	650	32
	700	30
90	600	36
	650	33
	700	32
	750	30
95	650	35
	700	33
	750	31
100	700	35
	750	32

• Tightening Torque

Every 300km of riding, we recommend checking the pre-tightening force of the following screws. Prolonged use with insufficient pre-tightening force can result in frame flexing and unusual noises. In severe cases, it may lead to irreversible damage. Some of these important screws should be applied with threadlocker during assembly, using LOCTITE 243 as the recommended type.

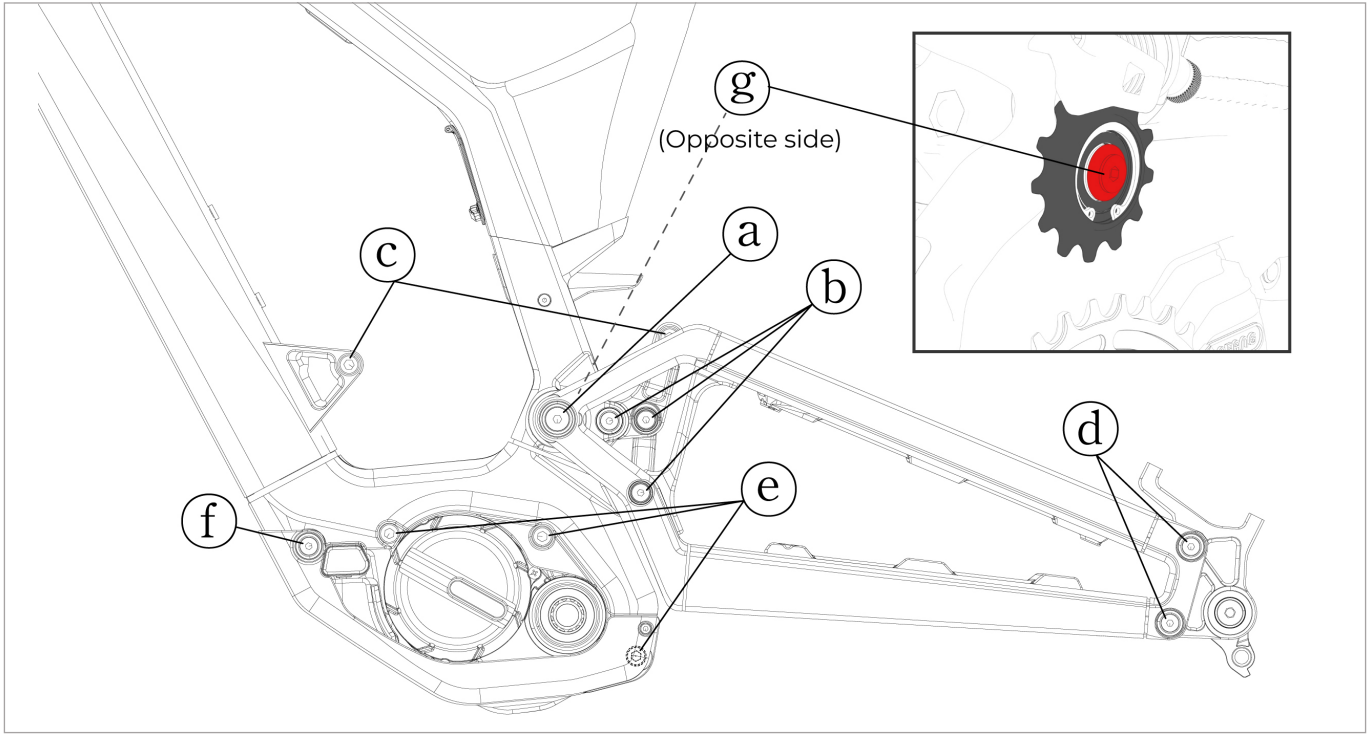

Recommended setting				
No.	Name	Tightening Torque	Tool	Threadlocker
ⓐ	Main Pivot Lock Screw	20N.m	5mm Hex Wrench	O
ⓑ	Suspension Pivot Lock Screw	15N.m	4mm Hex Wrench	O
ⓒ	Rear Shock Mounting Screws	20N.m	6mm Hex Wrench	X
ⓓ	Drop-out Plates Screws	15N.m	4mm Hex Wrench	O
ⓔ	Motor Mounting Screws	35N.m	6mm Hex Wrench	X
ⓕ	Battery Mounting Screws	10N.m	4mm Hex Wrench	X
ⓖ	Main Pivot Pully Screw	15N.m	4mm Hex Wrench	O

For screws on frame components other than those in the above table, tighten them to the specified pre-tightening force according to the tool's size.

Recommended setting	
Tool	Tightening Torque
2mm Hex Wrench	0.5N.m
2.5mm Hex Wrench	1.0N.m
3mm Hex Wrench	1.5N.m
4mm Hex Wrench	3.0N.m
5mm Hex Wrench	5.0N.m

For the tightening torque of screws on frame components not listed in the table, follow the requirements of the component manufacturer.

3.Running the bicycle

• Charging a bicycle battery

We recommend charging the bicycle before your first ride. When the charging is complete, a green light will come on.

• Activating the bicycle

Before running the bicycle, you need to activate it through a mobile app. Please scan the QR code on the right with your phone to obtain the app. After downloading the app, you will need to connect to the bicycle via Bluetooth to complete the activation.

While the bicycle can still operate in an unactivated state, when the total mileage exceeds 50 kilometers, the instrument panel will display a fault code 4E. It is recommended to activate the bicycle before reaching this mileage. Additionally, when replacing the bicycle's instrument panel, motor, or battery, the bicycle will return to an unactivated state, requiring reactivation.

The activation process is as follows:

a. Download and install the app.
b. To activate the bicycle, turn on the bicycle using the power button on the bicycle and make sure it is in the powered-on state.
c. Go to the "E-Bike" page in the menu as shown in **[Picture 1]** and click "Search for e-bikes" to start searching for Bluetooth.
d. Ensure that your phone is within 1 meter of the bicycle's battery, select the Bluetooth with a name starting with "Hybridizer." If multiple bicycles are present simultaneously, move away or open the motor cover plate as shown in **[Picture 2]** to confirm the battery serial number. The last 8 digits of the serial number should match the last part of the Bluetooth name. *1
e. Select the appropriate Bluetooth name and click the "Connect " button to connect to the bicycle.
f. For unactivated bicycles, an activation page will pop up. After clicking "Confirm," scan the QR code on the frame of the bicycle. This QR code is located on the left rear lower fork inside, with a red label on it, as shown in **[Picture 3]**.
g. After confirming that the scanned number is correct, click "Activate" to proceed with activation. The bike must be in the powered-on state at this time.
h. After successful activation, it will automatically enter the bicycle control page as shown in **[Picture 4]**. If it doesn't redirect, please repeat the above steps.

*1: If you cannot find the Bluetooth signal, please check the LED next to the battery charging port. If it is showing a blue light, it means it is already connected to another device. Disconnect from other nearby Bluetooth devices and try again.

Picture 1

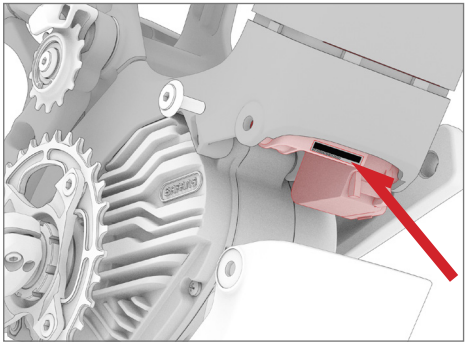

Picture 2

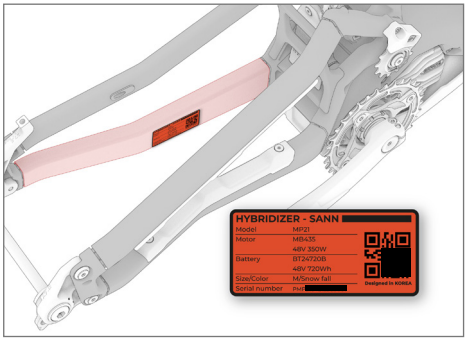

Picture 3

Picture 4

• Basic Operations of the bicycle Instrument Panel

1. Buttons introduction:

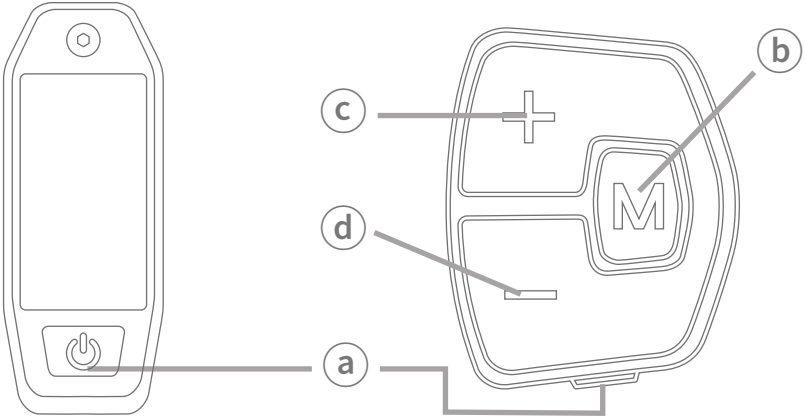

a. Power Button: Long press to power on the instrument panel, short press to switch between information screens.
b. Function Button: Long press to open the settings interface, short press to switch between information screens.
c. + Adjustment Button: Short press to increase motor assistance.
d. - Adjustment Button: Short press to decrease motor assistance, long press(hold) to activate walking assistent mode.

2. Page Descriptions:

1) Riding Page

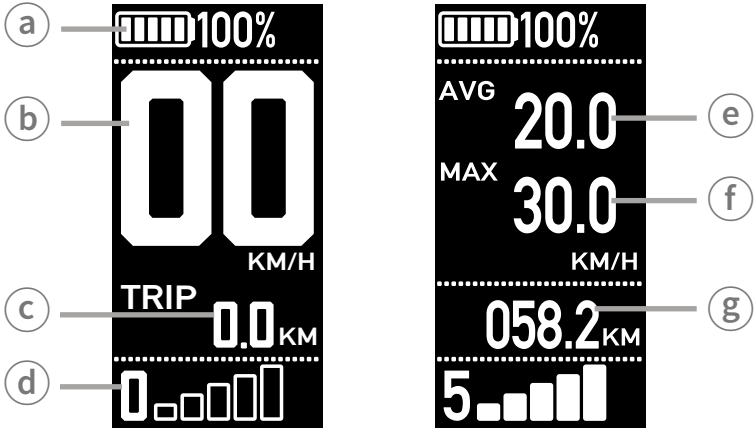

The page displayed after powering on is as shown above, and you can switch between different riding information using the function button:

a. Battery Indicator: Displays the remaining battery percentage and 1-5 levels of battery charge, as well as under-voltage status with a blinking icon.
b. Real-time Speed and Unit: Displays the current speed.
c. Riding Records: Shows riding time and distance, which can be reset in the settings interface.
d. Assistance Level: Displays the current assistance level, with 0 being no assistance and 5 being the highest level of assistance.
e. Average Speed: Displays the average speed of the bicycle, which can be reset in the settings interface.
f. Maximum Speed: Displays the bicycle's maximum speed, which can be reset in the settings interface.
g. Total Mileage: Displays the total mileage of the bike, which cannot be reset in the settings interface.

2) Settings Page

In the stationary state of the bike, long-press the function button to enter the settings page.

a. EXIT: Exit the settings interface.
b. Unit: Switch between display units, toggling between metric and imperial.
c. APO: Set the automatic power-off time when the bike is stationary.
d. Clear: Reset riding data; the total bike mileage will not be reset.
e. BAT: Display battery information.
f. HMI: Display instrument panel information.

3) Error Code Definitions

Common error codes are as follows:

Fault Code	Fault Description
ERROR 04	plug-in device fault
ERROR 05	plug-in device fault
ERROR 07	Overvoltage protection
ERROR 08	Motor Hall signal line fault
ERROR 09	Motor phase line fault
ERROR 10	Motor overheating
ERROR 11	Controller temperature sensor fault
ERROR 12	Current sensor fault
ERROR 13	Battery internal temperature sensor fault
ERROR 14	Motor internal temperature sensor fault
ERROR 21	Speed sensor fault, make sure that the speed magnet is not missing
ERROR 22	BMS communication fault
ERROR 30	Communication cable fault, check if the cables and connectors are flattened or damaged
ERROR 31	Battery low voltage protection, please charge the battery
ERROR 45	Battery temperature too high
ERROR 46	Battery temperature too low
ERROR 4E	The bicycle is not activated, fault disappears after activation

If the displayed fault code is not in the table or cannot be resolved as shown in the table, please contact customer service.

• Basic Battery Operations

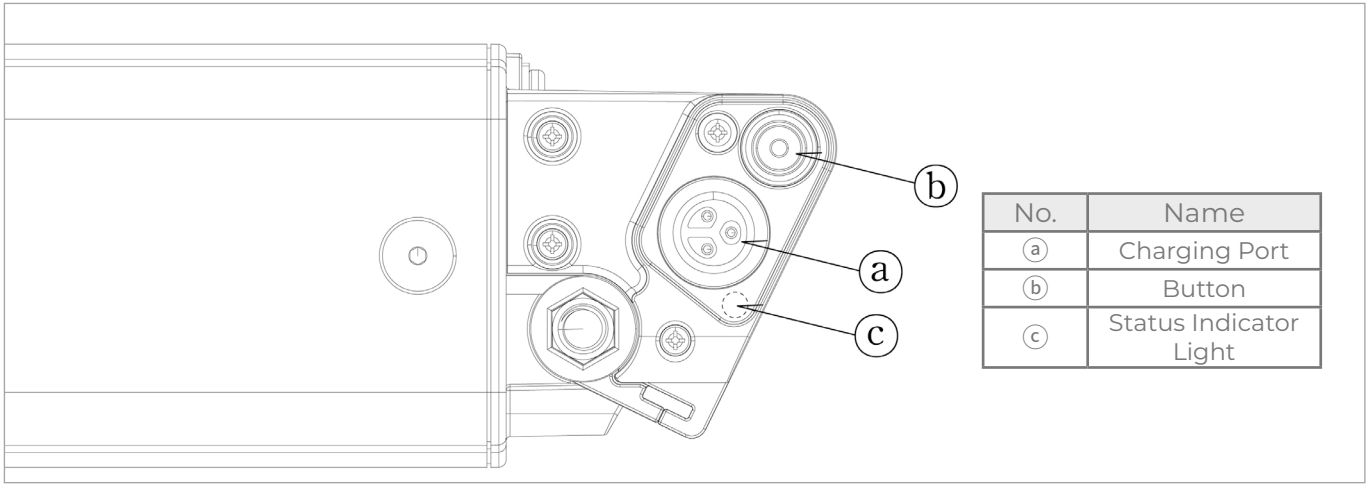

No.	Name
ⓐ	Charging Port
ⓑ	Button
ⓒ	Status Indicator Light

Around the battery charging port, there are a battery status display button and status indicator light. The operation methods and prompt information are as follows:

When the battery is connected to the charger, there is no need to press the battery status display button	
Green light blinking	Charging in progress
Green light steady on	Charging completed

When the battery is not connected to the charger, press the battery status button briefly	
Green light on for 10 seconds	Battery is normal
Green light blinks 3 times	Battery is in protection mode or the battery pack is damaged *1
light is not on	Battery pack is damaged

*1: When the battery has been stored for a long time and the battery level is too low, it may enter this state. Under normal circumstances, charging the battery can resolve this state and restore normal use. When connected to the charger, both the battery and the charger should display a charging status. If the charger doesn't show a charging status after being connected, the battery may be damaged and needs replacement.

The battery has Bluetooth functionality, and there are indicator lights to represent the Bluetooth status, with the following meanings:

Blue light steady on	Bluetooth is connected
Blue light blinks for 10 seconds and then turns off	Bluetooth disconnection successful

If necessary, you can initialize the Bluetooth name as follows:

In any situation, long-press the battery status button	
The green light will turn on for 3 seconds and then turn off The blue light will blink for 10 seconds and then turn off	Initialize the battery bluetooth name

During the charging process, the charger indicator light provides the following information:

Red light steady on	Charging in progress
Green light steady on	Charging completed

Precautions for using the battery and charger：

a. Avoid accidental short-circuiting of the positive and negative terminals.
b. Do not disassemble the battery on your own.
c. Keep the battery away from high-temperature environments, such as direct sunlight or close proximity to heaters or flames.
d. Avoid exposing the battery to liquids, including water, acidic, or alkaline fluids.
e. If you need to store the battery for an extended period, place it in a cool and dry place. Charge the battery for 2 hours every 3 months during storage.
f. Use the original charger for charging. We do not take responsibility for any accidents that may occur when using third-party chargers.
g. Regarding the temperature range for storing, charging, and using the battery, please refer to the following table:

Usage Scenario	Temperature Range
Long-term storage	-20~60°C
Battery charging	0~45°C
Bike operation	-20~60°C

4. After-Sales Policy

- Bicycles Warranty Period

If there are issues with the frame components within the warranty period, you can contact us through the following means:

After-sales email: service@hybridizer.cn

Regarding the warranty period for the bike, please refer to the following table:

Component Name	Warranty Period
Frame set	24 months
Motor	24 months
Battery	24 months
Instrument panel	24 months
Electronic cable	24 months

Warranty policies do not apply in cases of improper use, intentional damage, or unauthorized removal of speed limits.

This warranty rule does not apply to the following situations:

1. Human damage, disassembly, or modification of this product.
2. Product damage caused by incorrect operation

Hybridizer team. reserves the right to interpret and modify the contents of this manual

FCC Warning Statement

Changes or modifications not expressly approved by the party responsible for compliance could void the user's authority to operate the equipment. This equipment has been tested and found to comply with the limits for a Class B digital device, pursuant to Part 15 of the FCC Rules. These limits are designed to provide reasonable protection against harmful interference in a residential installation. This equipment generates uses and can radiate radio frequency energy and, if not installed and used in accordance with the instructions, may cause harmful interference to radio communications. However, there is no guarantee that interference will not occur in a particular installation. If this equipment does cause harmful interference to radio or television reception, which can be determined by turning the equipment off and on, the user is encouraged to try to correct the interference by one or more of the following measures:

- **Reorient or relocate the receiving antenna.**
- **Increase the separation between the equipment and receiver.**
- **Connect the equipment into an outlet on a circuit different from that to which the receiver is connected.**
- **Consult the dealer or an experienced radio/TV technician for help.**

This device complies with part 15 of the FCC Rules. Operation is subject to the following two conditions: (1) This device may not cause harmful interference, and
(2) this device must accept any interference received, including interference that may cause undesired operation.

The device has been evaluated to meet general RF exposure requirement. The device can be used in portable exposure condition without restriction.

Born to be powered!

HYBRIDIZER