RF Test Report

Applicant	:	InnoXings CO., LTD.
Product Name	:	Wi-Fi 6, 2x2 2.4Ghz and BT Combo Module
Trade Name	:	INNOXINGS
Model Number	:	AI5018H-1
Applicable Standard	:	FCC 47 CFR PART 15 SUBPART C ANSI C63.10:2013
Received Date	:	Oct. 02, 2023
Test Period	:	Oct. 18 ~ Nov. 17, 2023
Issued Date	:	Mar. 18, 2024

Issued by

Eurofins E&E Wireless Taiwan Co., Ltd.
No. 140-1, Changan Street, Bade District,
Taoyuan City 334025, Taiwan (R.O.C.)
Tel：+886-3-2710188 / Fax：+886-3-2710190

Taiwan Accreditation Foundation accreditation number: 1330
Frequency Range: 9 kHz to 325 GHz
Test Firm Registration Number: 226252 (Bade test site)
Test Firm Registration Number: 191812 (Wugu test site)

Note:

1.The test results are valid only for samples provided by customers and under the test conditions described in this report.
2.This report shall not be reproduced except in full, without the written approval of Eurofins E&E Wireless Taiwan Co., Ltd.
3.The relevant information is provided by customers in this test report. According to the correctness, appropriateness or completeness of the information provided by the customer, if there is any doubt or error in the information which affects the validity of the test results, the laboratory does not take the responsibility.

Revision History

Rev.	Issued Date	Description	Revised by
00	Mar. 18, 2024	Initial Issue	Rowan Hsieh

Verification of Compliance

Applicant	:	InnoXings CO., LTD.
Product Name	:	Wi-Fi 6, 2x2 2.4Ghz and BT Combo Module
Trade Name	:	INNOXINGS
Model Number	:	AI5018H-1
FCC ID	:	2BDIDQ5018-IPA-W-01
Applicable Standard	:	FCC 47 CFR PART 15 SUBPART C ANSI C63.10:2013
Test Result	:	Complied
Performing Lab.	:	Eurofins E&E Wireless Taiwan Co., Ltd. No. 140-1, Changan Street, Bade District, Taoyuan City 334025, Taiwan (R.O.C.) Tel：+886-3-2710188 / Fax：+886-3-2710190 Taiwan Accreditation Foundation accreditation number: 1330

Testing Laboratory 1330

Eurofins E&E Wireless Taiwan Co., Ltd. tested the above equipment in accordance with the requirements set forth in the above standards. All indications of Pass/Fail in this report are opinions expressed by Eurofins E&E Wireless Taiwan Co., Ltd. based on interpretations and/or observations of test results. The test results show that the equipment tested is capable of demonstrating compliance with the requirements as documented in this report.

Approved By : Kai Yu Yang

TABLE OF CONTENTS

1 General Information 5
1.1. Summary of Test Result 5
1.2. Testing Location 6
1.3. Measurement Uncertainty 6
2 EUT Description 7
3 Test Methodology 8
3.1. Mode of Operation 8
3.2. EUT Test Step 8
3.3. Test Site Environment 6
3.4. Configuration of Test System Details 9
3.5. Test Instruments 11
4 Measurement Procedure 14
4.1. AC Power Line Conducted Emission Measurement 14
4.2. Radiated Emission Measurement 16
4.3. Maximum Conducted Output Power Measurement 19
4.4. 6 dB RF Bandwidth Measurement 20
4.5. Maximum Power Density Measurement 21
4.6. Out of Band Conducted Emissions Measurement 22
4.7. Antenna Measurement 22
5 Test Results 23
5.1. Conducted Emission 23
5.2. Conducted Test Results 25
5.3. Radiated Emission Measurement 26

Appendix A. Test Data
Appendix B. Test Plots
Appendix C. Test Setup Photographs

1 General Information

1.1. Summary of Test Result

Standard	Item	Result	Remark
15.207	AC Power Conducted Emission	PASS	-----
15.247(d)	Transmitter Radiated Emissions	PASS	-----
15.247(b)(3)	Max. Output Power	PASS	-----
15.247(a)(2)	6 dB RF Bandwidth	PASS	-----
15.247(e)	Maximum Power Spectral Density	PASS	-----
15.247(d)	Out of Band Conducted Spurious Emission	PASS	-----
15.203	Antenna Requirement	PASS	-----

Decision Rule

■ Uncertainty is not included.

□ Uncertainty is included.

Standard	Description
CFR47, Part 15, Subpart C	Intentional Radiators
ANSI C63. 10: 2013	American National Standard of Procedures for Compliance Testing of Unlicensed Wireless Devices
KDB 558074 D01 15.247 Meas Guidance v05r02	GUIDANCE FOR COMPLIANCE MEASUREMENTS ON DIGITAL TRANSMISSION SYSTEM, FREQUENCY HOPPING SPREAD SPECTRUM SYSTEM, AND HYBRID SYSTEM DEVICES OPERATING UNDER SECTION 15.247 OF THE FCC RULES

1.2. Testing Location

Lab Name: Eurofins E&E Wireless Taiwan Co., Ltd.

Site Address: ☐ No. 140-1, Changan Street, Bade District, Taoyuan City 334025, Taiwan (R.O.C.)

Site Address: ■ No. 2, Wuquan 5th Rd. Wugu Dist., New Taipei City, Taiwan (R.O.C.)

1.3. Measurement Uncertainty

Test Item	Frequency	Uncertainty	
		BD	WG
Conducted Emission	150 kHz ~ 30 MHz	2.7 dB	2.6 dB
Conducted Output Power		1.1 dB	1.1 dB
RF Bandwidth		4.5 %	4.5 %
Power Spectral Density		1.1 dB	1.1 dB
Duty Cycle		1.1 %	1.0 %

Test Item	Frequency	Uncertainty			
		96601-BD	96603-BD	96602-WG	96603-WG
Radiated Emission	9 kHz ~ 30 MHz	1.9 dB	1.9 dB	1.6 dB	1.6 dB
	30 MHz ~ 1000 MHz	4.9 dB	4.9 dB	4.8 dB	4.8 dB
	1000 MHz ~ 18000 MHz	4.9 dB	5.0 dB	5.0 dB	5.2 dB
	18000 MHz ~ 26500 MHz	4.3 dB	4.4 dB	4.4 dB	4.5 dB
	26500 MHz ~ 40000 MHz	4.5 dB	4.5 dB	4.6 dB	4.5 dB

1.4. Test Site Environment

Items	Required (IEC 60068-1)	Interval(*)
Temperature (°C)	15-35	20-30
Humidity (%RH)	25-75	45-75

(*)The measurement ambient temperature is within this range.

2 EUT Description

The product specifications of the EUT presented in the report are declared by the manufacturer who shall take full responsibility for the authenticity(except Max. RF Output Power).

Applicant	InnoXings CO., LTD. 13 F.-5, No. 155, Sec. 1, Keelung Rd., Xinyi Dist., Taipei City 110058, Taiwan (R.O.C.)			
Product Name	Wi-Fi 6, 2x2 2.4Ghz and BT Combo Module			
Trade Name	INNOXINGS			
Model Number	AI5018H-1			
FCC ID	2BDIDQ5018-IPA-W-01			
Frequency Range	2402 ~ 2480 MHz			
Modulation Type	GFSK			
Operate Temp. Range	-20 °C ~ +70 °C			
EUT Power Rating	3.3 V			
Antenna information	Trade	Model	Type	Max. Gain (dBi)
	M.gear	C2108-510001-A	SMA Antenna	3.82
Max. RF Output Power	LE, GFSK: 0.00009 W			
	2LE, GFSK: 0.00030 W			
	BLR C2, GFSK: 0.00009 W			
	BLR C8, GFSK: 0.00009 W			

CH	Freq. (MHz)	CH	Freq. (MHz)	CH	Freq. (MHz)
0	2402	14	2430	28	2458
1	2404	15	2432	29	2460
2	2406	16	2434	30	2462
3	2408	17	2436	31	2464
4	2410	18	2438	32	2466
5	2412	19	2440	33	2468
6	2414	20	2442	34	2470
7	2416	21	2444	35	2472
8	2418	22	2446	36	2474
19	2420	23	2448	37	2476
10	2422	24	2450	38	2478
11	2424	25	2452	39	2480
12	2426	26	2454	---	---
13	2428	27	2456	---	---

3 Test Methodology

3.1. Mode of Operation

Decision of Test Eurofins has verified the construction and function in typical operation. All the test modes were carried out with the EUT in normal operation, which was shown in this test report and defined as:

Pre-Test Mode	Final-Test Mode
Transmit Mode	V
BLE 1M	
BLE 2M	V
BLR C2	
BLR C8	V

Software used to control the EUT for staying in continuous transmitting mode was programmed.
After verification, all tests were carried out with the worst case test modes.

By preliminary testing and verifying three axis (X, Y and Z) position of EUT transmitted status, it was found that “Z axis” position was the worst, then the final test was executed the worst condition and test data were recorded in this report.

3.2. EUT Test Step

1	Setup the EUT shown on “Configuration of Test System Details”.
2	Turn on the power of all equipment.
3	Turn on TX function.
4	EUT run test program.

3.3. Configuration of Test System Details

Radiated Emissions

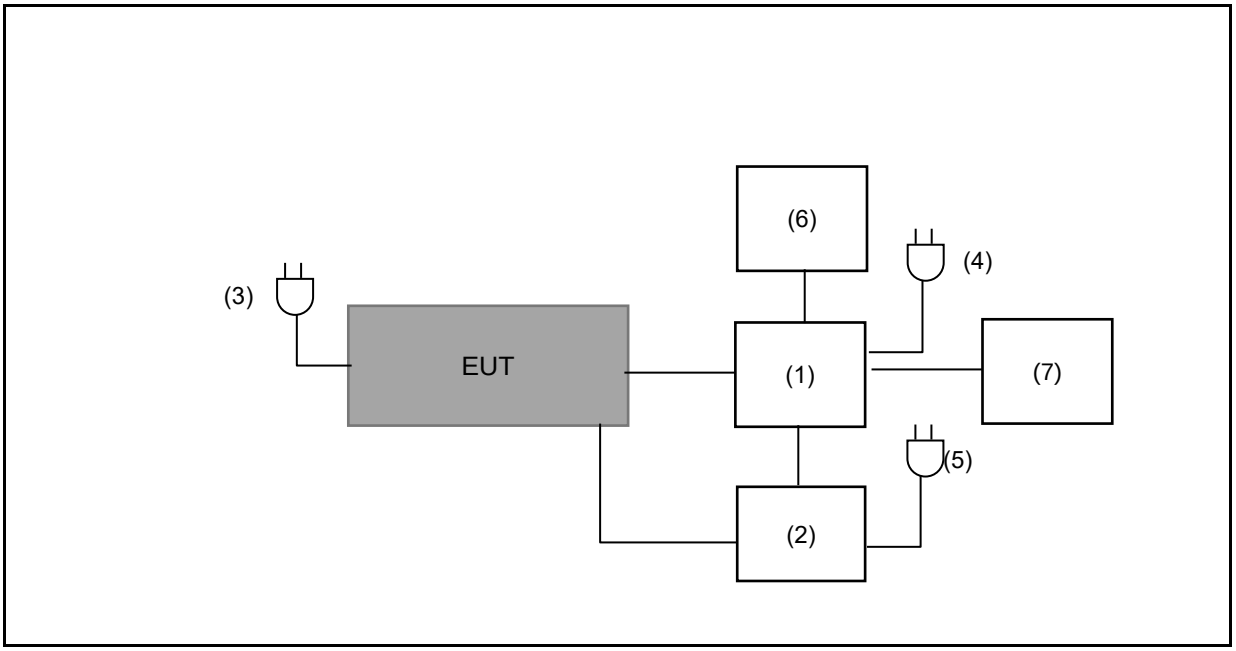

Conduction Emission

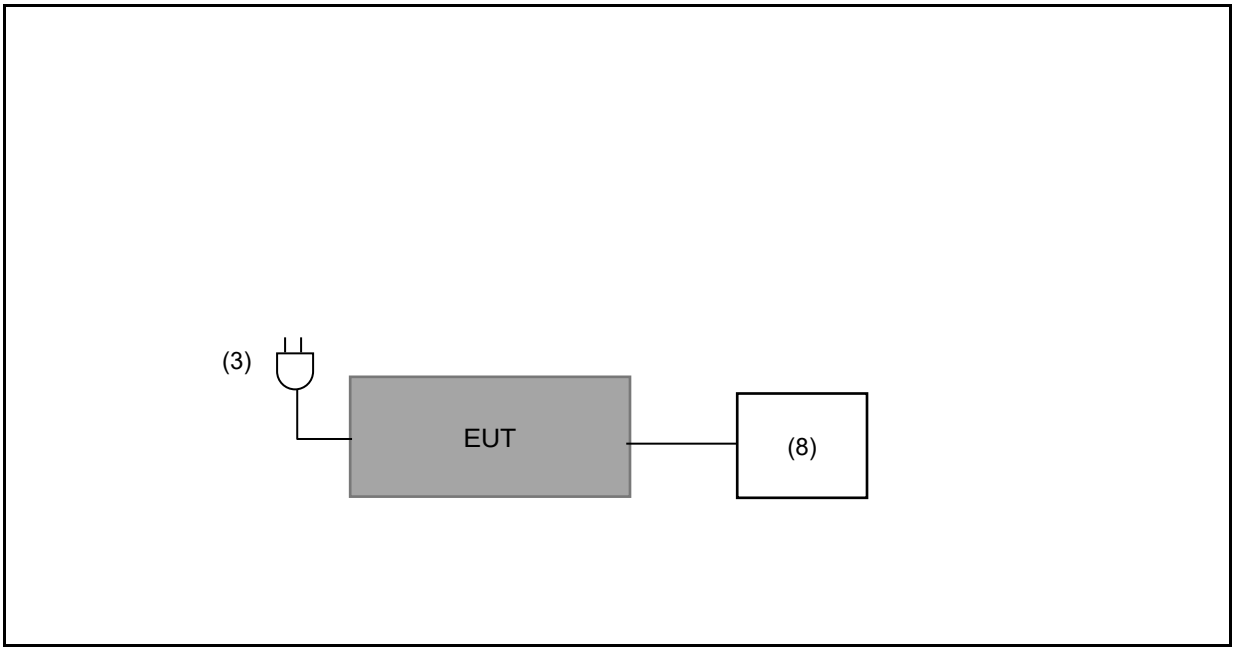

Product		Manufacturer	Model Number	Serial Number	Power Cord
(1)	computer	HP	TPC-F063DM	JPA5025XV0	---
(2)	Access Point	TP-Link	TL-WR1043ND	215C084000719	---
(3)	Adapter	---	DSX-120200-CN	---	---
(4)	Adapter	HP	TPC-LA58	---	---
(5)	Adapter	TP-Link	T120150-2B1	---	---
(6)	Monitor	acer	KA241Y	---	---
(7)	Mouse	acer	---	---	---
(8)	Notebook	Dell	Latitude 5420	---	---

3.4. Test Instruments

For Conducted
Test Period: Oct. 18 ~ Nov. 17, 2023
Testing Engineer: Sandy Yang

Test Site		RF03-WG				
Use	Equipment	Manufacturer	Model Number	Serial Number	Cal. Date	Cal. Period
☒	Spectrum Analyzer (10 Hz~26.5 GHz)	Keysight	N9010B	MY63460164	Mar. 07, 2023	1 year
☒	Power Sensor	Anritsu	MA24408A	11998	Feb. 07, 2023	1 year

For Radiated Emissions
Test Period: Nov. 13 ~ Nov. 16, 2023
Testing Engineer: Marin Lee

Radiation test sites		Semi Anechoic Room 96602-WG				
Use	Equipment	Manufacturer	Model Number	Serial Number	Cal. Date	Cal. Period
☒	LOOP Antenna (9 kHz~30 MHz)	Schwarzbeck Mess-Elektronik	FMZB 1513-60	00031	Feb. 21, 2023	1 year
☒	Trilog Broadband Antenna (30 MHz~1 GHz)	Schwarzbeck Mess-Elektronik	VULB9168	01276	Feb. 09, 2023	1 year
☒	Broadband Horn Antenna (1 GHz~18 GHz)	RF SPIN	DRH18-E	210305A18ES	Feb. 21, 2023	1 year
☒	Broadband Horn Antenna (15 GHz~40 GHz)	Schwarzbeck Mess-Elektronik	BBHA9170	01133	Feb. 13, 2023	1 year
☒	Spectrum Analyzer (10 Hz~44 GHz)	KEYSIGHT	N9020B	MY60112362	Feb. 16, 2023	1 year
☒	Pre-Amplifier	Agilent	8447D	2944A10961	Jul. 10, 2023	1 year
☒	Pre-Amplifier	EMCI	EMC118A45SE	980822	Nov. 22, 2022	1 year
☒	Pre-Amplifier	EMCI	EMC184045SE	980861	Dec. 27, 2022	1 year
☒	Coaxial Cable (10 kHz~3000 MHz)	EMCI	EMCCFD400-NM-NM-2000	211006	Nov. 14, 2022	1 year
☒	Coaxial Cable (10 kHz~3000 MHz)	EMCI	EMCCFD400-NM-NM-2000	211007	Nov. 14, 2022	1 year
☒	Coaxial Cable (10 kHz~3000 MHz)	EMCI	EMCCFD400-NM-NM-6000	211015	Nov. 14, 2022	1 year
☒	Coaxial Cable (1 GHz~18 GHz)	EMCI	EMC104-SM-SM-1000	211026	Nov. 14, 2022	1 year

Note: N.C.R. = No Calibration Request.

For Radiated Emissions
Test Period: Nov. 13 ~ Nov. 16, 2023
Testing Engineer: Marin Lee

Radiation test sites		Semi Anechoic Room 96602-WG				
Use	Equipment	Manufacturer	Model Number	Serial Number	Cal. Date	Cal. Period
☒	Coaxial Cable (1 GHz~18 GHz)	EMCI	EMC104-SM-SM-2000	211035	Nov. 14, 2022	1 year
☒	Coaxial Cable (1 GHz~18 GHz)	EMCI	EMC104-SM-SM-8000	211036	Nov. 14, 2022	1 year
☒	Coaxial Cable (10 kHz~3000 MHz)	EMCI	EMCCFD400-NM-NM-2000	211006	Nov. 13, 2023	1 year
☒	Coaxial Cable (10 kHz~3000 MHz)	EMCI	EMCCFD400-NM-NM-2000	211007	Nov. 13, 2023	1 year
☒	Coaxial Cable (10 kHz~3000 MHz)	EMCI	EMCCFD400-NM-NM-6000	211015	Nov. 13, 2023	1 year
☒	Coaxial Cable (1 GHz~18 GHz)	EMCI	EMC104-SM-SM-1000	211026	Nov. 13, 2023	1 year
☒	Coaxial Cable (1 GHz~18 GHz)	EMCI	EMC104-SM-SM-2000	211035	Nov. 13, 2023	1 year
☒	Coaxial Cable (1 GHz~18 GHz)	EMCI	EMC104-SM-SM-8000	211036	Nov. 13, 2023	1 year
☒	Coaxial Cable (18 GHz~40 GHz)	EMCI	EMC101G-KM-KM-600	211211	Jan. 19, 2023	1 year
☒	Coaxial Cable (18 GHz~40 GHz)	EMCI	EMC101G-KM-KM-2000	211210	Jan. 19, 2023	1 year
☒	Coaxial Cable (18 GHz~40 GHz)	EMCI	EMC101G-KM-KM-6000	211209	Jan. 19, 2023	1 year
☒	Highpass Filter	Warison	WFIL-H3000-20000F	WR4BBFWC2B1	Nov. 14, 2022	1 year
☒	Highpass Filter	Warison	WFIL-H3000-20000F	WR4BBFWC2B1	Nov. 13, 2023	1 year
☒	Software	R_RAM	V1.3	N/A	N.C.R.	---

Note: N.C.R. = No Calibration Request.

For Conduction Emissions
Test Period: Nov. 13, 2023
Testing Engineer: Jason Yeh

Radiation test sites		Conducted Emission Measurement Conduction01-WG				
Use	Equipment	Manufacturer	Model Number	Serial Number	Cal. Date	Cal. Period
☒	Test Receiver	R&S	ESR3	102919	Dec. 30, 2022	1 year
☒	LISN	R&S	ENV216	101041	Apr. 12, 2023	1 year
☒	Current Probe	R&S	EZ-17	101687	Jun. 15, 2023	1 year
☒	Cable	EMCI	EMCCFD300-BM-NM-4000	220402	Jun. 08, 2023	1 year
☒	Software	ELEKTRA	94.50.4	N.A.	N.C.R.	N.C.R.

Note: N.C.R. = No Calibration Request.

4 Measurement Procedure

4.1. AC Power Line Conducted Emission Measurement

■ **Limit**

Frequency (MHz)	Quasi-peak	Average
0.15 - 0.5	66 to 56	56 to 46
0.50 - 5.0	56	46
5.0 - 30.0	60	50

■ **Test Setup**

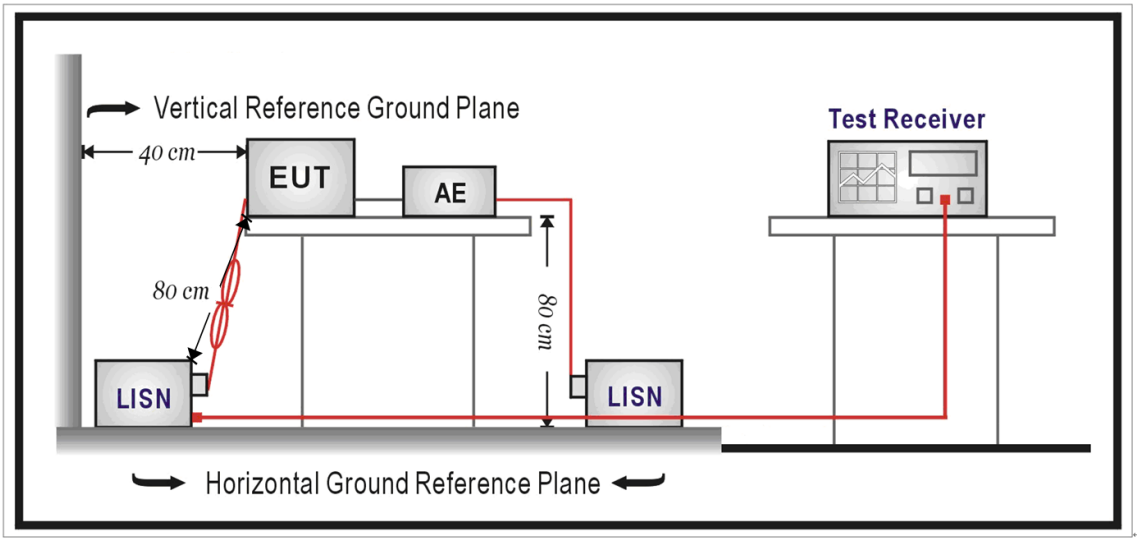

■ **Test Procedure**

The EUT and simulators are connected to the main power through a line impedance stabilization network (L.I.S.N.). This provides a 50 Ω// 50 uH coupling impedance for the measuring equipment. The peripheral devices are also connected to the main power through a LISN that provides a 50 Ω// 50 uH coupling impedance with 50 ohm termination.

Tabletop device shall be placed on a non-conducting platform, of nominal size 1 m by 1.5 m, raised 80 cm above the reference ground plane. The wall of screened room shall be located 40 cm to the rear of the EUT. Other surfaces of tabletop or floor standing EUT shall be at least 80 cm from any other ground conducting surface including one or more LISNs. For floor-standing device shall be placed under the EUT with a 12 mm insulating material.

Conducted emissions were investigated over the frequency range from 0.15 MHz to 30 MHz using a resolution bandwidth of 9 kHz. The equipment under test (EUT) shall be meet the limits in section 4.1, as applicable, including the average limit and the quasi-peak limit when using respectively, an average detector and quasi-peak detector measured in accordance with the methods described of related standard. When all of peak value were complied with quasi-peak and average limit from 150 kHz to 30 MHz then quasi-peak and average measurement was unnecessary.

The AMN shall be placed 0.8 m from the boundary of the unit under test and bonded to a ground reference plane for AMNs mounted on top of the ground reference plane. This distance is between the closest points of the AMN and the EUT. All other units of the EUT and associated equipment shall be at least 0.8 m from the AMN. If the mains power cable is longer than 1 m then the cable shall be folded back and forth at the centre of the lead to form a bundle no longer than 0.4 m. All of interconnecting cables that hang closer than 40 cm to the ground plane shall be folded back and forth in the center forming a bundle 30 cm to 40 cm long. All of EUT and AE shall be separate place more than 0.1 m. All 50 Ω ports of the LISN shall be resistively terminated into 50 Ω loads when not connected to the measuring instrument.

If the reading of the measuring receiver shows fluctuations close to the limit, the reading shall be observed for at least 15 s at each measurement frequency; the higher reading shall be recorded with the exception of any brief isolated high reading which shall be ignored.

4.2. Radiated Emission Measurement

■ **Limit**

According to §15.209(a), except as provided elsewhere in this subpart, the emissions from an intentional radiator shall not exceed the field strength levels specified in the following table:

Frequency (MHz)	Field Strength (μV/m at meter)	Measurement Distance (meters)
0.009 – 0.490	2400 / F (kHz)	300
0.490 – 1.705	24000 / F (kHz)	30
1.705 – 30.0	30	30
30 - 88	100**	3
88-216	150**	3
216-960	200**	3
Above 960	500	3

** Except as provided in paragraph (g), fundamental emissions from intentional radiators operating under this Section shall not be located in the frequency bands 54-72 MHz, 76-88 MHz, 174-216 MHz or 470-806 MHz. However, operation within these frequency bands is permitted under other sections of this Part, e.g., Sections 15.231 and 15.241.

■ **Setup**

9 kHz ~ 30 MHz

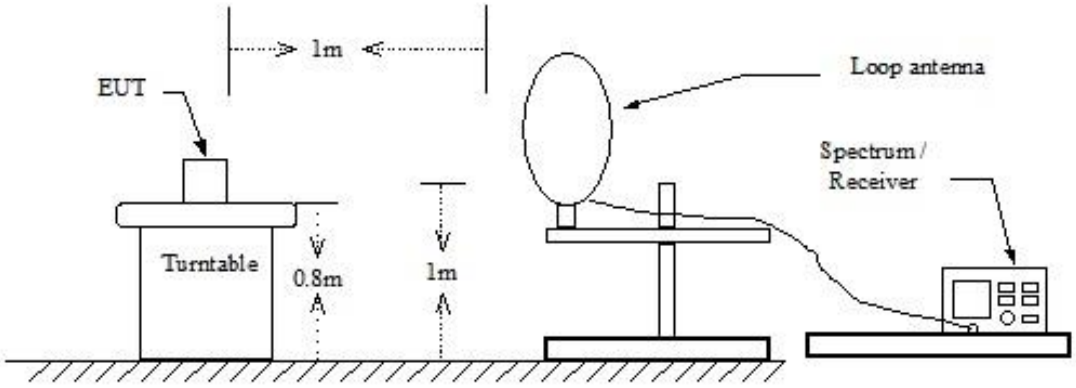

Below 1 GHz

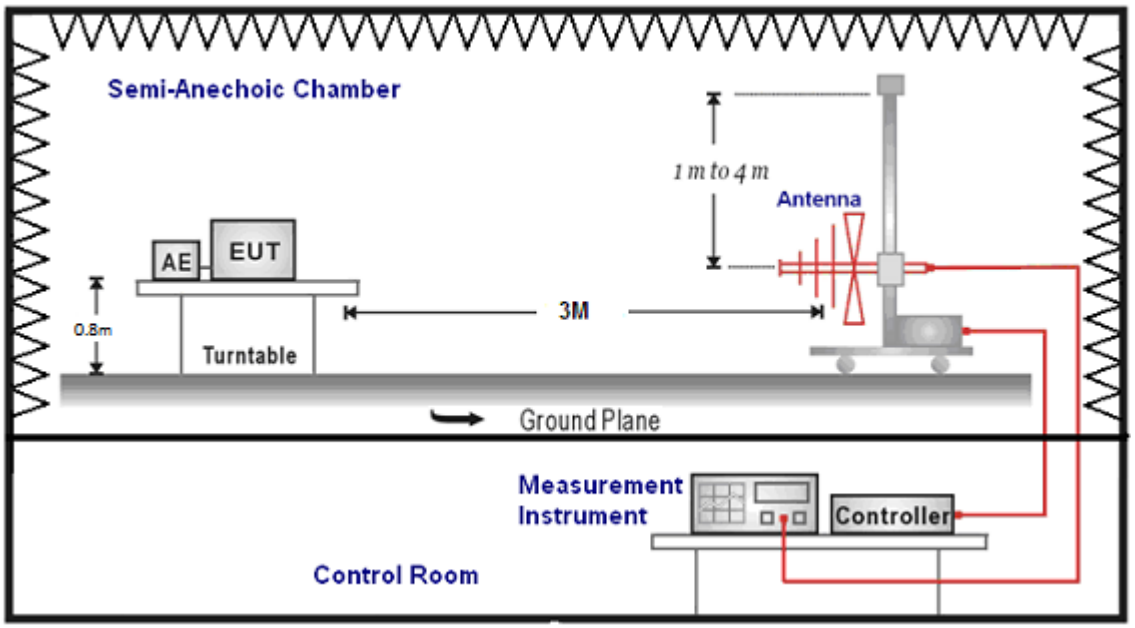

Above 1 GHz

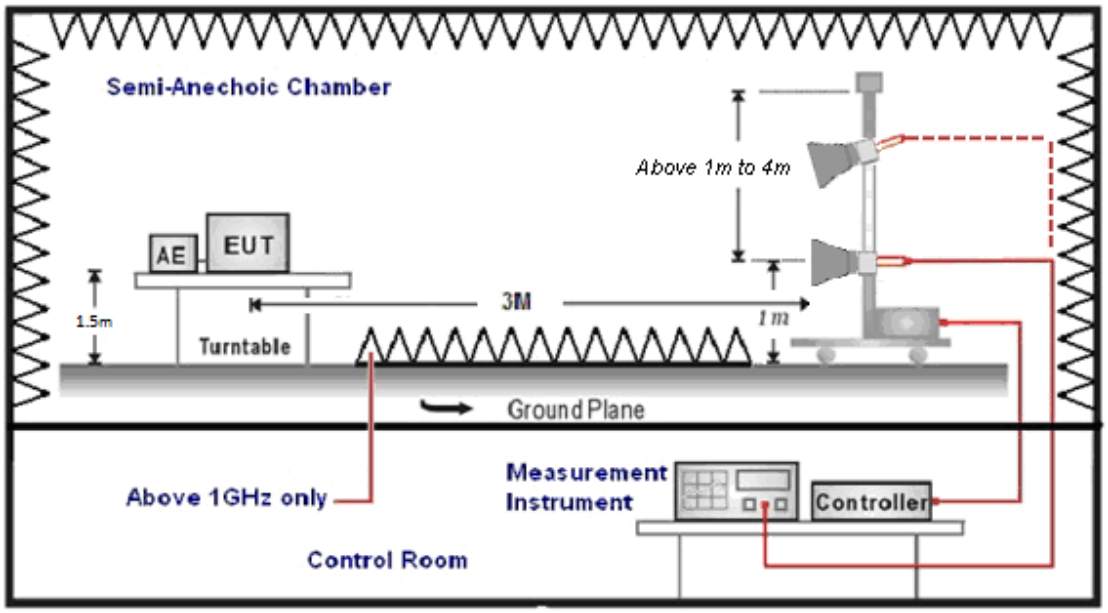

■ **Test Procedure**

Final radiation measurements were made on a three-meter, Semi Anechoic Chamber. The EUT system was placed on a nonconductive turntable which is 0.8 or 1.5 meters height, top surface 1.0 x 1.5 meter. The spectrum was examined from 250 MHz to 2.5 GHz in order to cover the whole spectrum below 10th harmonic which could generate from the EUT. During the test, EUT was set to transmit continuously & Measurements spectrum range from 9 kHz to 26.5 GHz is investigated.

For measurements below 30 MHz the resolution bandwidth is set to 10 kHz for peak detection measurements or 9 kHz for quasi-peak detection measurements. The video bandwidth is 3 times of the resolution bandwidth.

For measurements below 1 GHz the resolution bandwidth is set to 100 kHz for peak detection measurements or 120 kHz for quasi-peak detection measurements. Peak detection is used unless otherwise noted as quasi-peak.

For measurements above 1 GHz the resolution bandwidth is set to 1 MHz, and then the video bandwidth is set to 3 MHz for peak measurements and 10 Hz for average measurements when Duty cycle >0.98 / 1/T for average measurements when Duty cycle <0.98. A nonconductive material surrounded the EUT to supporting the EUT for standing on tree orthogonal planes. At each condition, the EUT was rotated 360 degrees, and the antenna was raised and lowered from one to four meters to find the maximum emission levels. Measurements were taken using both horizontal and vertical antenna polarization.

SCHWARZBECK MESS-ELEKTRONIK Biconilog Antenna at 3 Meter and the SCHWARZBECK Double Ridged Guide Antenna was used in frequencies 1 –26.5 GHz at a distance of 3 meter. The antenna at an angle toward the source of the emission. All test results were extrapolated to equivalent signal at 3 meters utilizing an inverse linear distance extrapolation Factor (20 dB/decade).

For testing above 1 GHz, the emission level of the EUT in peak mode was 20 dB lower than average limit (that means the emission level in peak mode also complies with the limit in average mode), then testing will be stopped and peak values of EUT will be reported, otherwise, the emissions will be measured in average mode again and reported.

Appropriate preamplifiers were used for improving sensitivity and precautions were taken to avoid overloading or desensitizing the spectrum analyzer. No post – detector video filters were used in the test.

The spectrum analyzer's 6 dB bandwidth was set to 1 MHz, and the analyzer was operated in the peak detection mode, for frequencies both below and up 1 GHz. The average levels were obtained by subtracting the duty cycle correction factor from the peak readings.

The following procedures were used to convert the emission levels measured in decibels referenced to 1 microvolt (dBuV) into field intensity in micro volts pre meter (uV/m).

The actual field intensity in decibels referenced to 1 microvolt in to field intensity in micro colts per meter (dBuV/m).

The actual field is intensity in referenced to 1 microvolt per meter (dBuV/m) is determined by algebraically adding the measured reading in dBuV, the antenna factor (dB), and cable loss (dB) and Subtracting the gain of preamplifier (dB) is auto calculate in spectrum analyzer.

(1) Amplitude (dBuV/m) = FI (dBuV) +AF (dBuV) +CL (dBuV)-Gain (dB)
FI= Reading of the field intensity.
AF= Antenna factor.
CL= Cable loss.
P.S Amplitude is auto calculate in spectrum analyzer.

(2) Actual Amplitude (dBuV/m) = Amplitude (dBuV)-Dis(dB)
The FCC specified emission limits were calculated according the EUT operating frequency and by following linear interpolation equations:
(a) For fundamental frequency : Transmitter Output < +30 dBm
(b) For spurious frequency : Spurious emission limits = fundamental emission limit /10

Data of measurement within this frequency range without mark in the table above means the reading of emissions are attenuated more than 20 dB below the permissible limits or the field strength is too small to be measured.

4.3. Maximum Conducted Output Power Measurement

■ **Limit**

For systems using digital modulation in the 2400-2483.5 MHz, the limit for peak output power is 30 dBm.

■ **Test Setup**

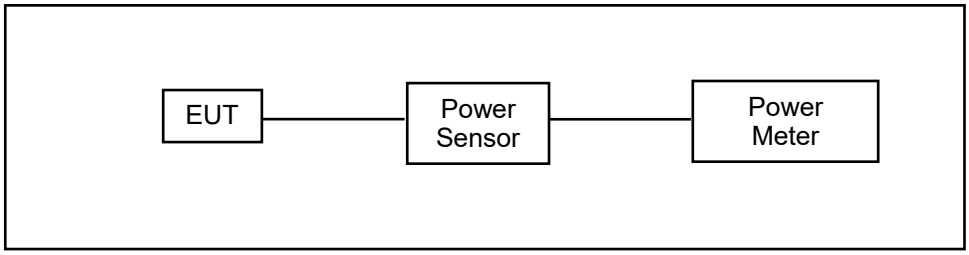

■ **Test Procedure**

The testing follows the Measurement Procedure of ANSI C63.10:2013 section 11.9.2.3.2 Method AVGPM.

The tests below are run with the EUT's transmitter set at high power in TX mode. The EUT is needed to force selection of output power level and channel number. While testing, EUT was set to transmit continuously. Remove the Subjective device's antenna and connect the RF output port to power sensor..

4.4. 6 dB RF Bandwidth Measurement

■ **Limit**

6 dB RF Bandwidth: Systems using digital modulation techniques may operate in the 2400–2483.5 MHz bands. The minimum 6 dB band-width shall be at least 500 kHz.
99 % Occupied Bandwidth: N/A

■ **Test Setup**

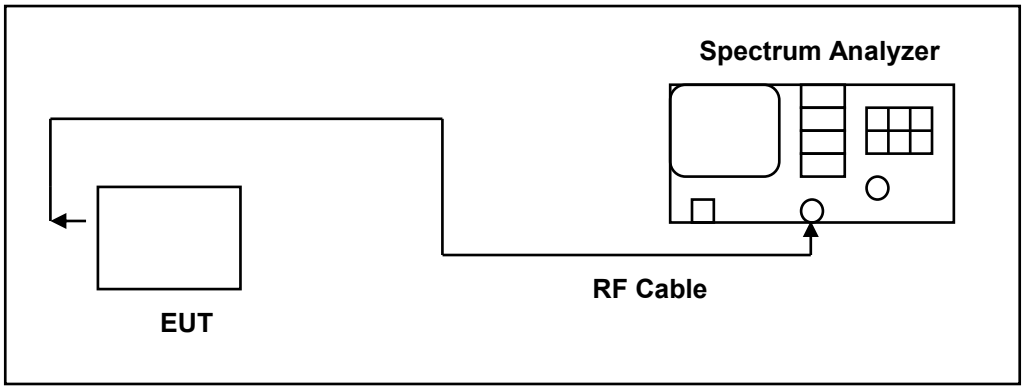

■ **Test Procedure**

The EUT tested to DTS test procedure of ANSI C63.10:2013 section 11.8.2 option2 for compliance to FCC 47CFR 15.247 requirements.
6 dB RF Bandwidth: The antenna port of the EUT was connected to the input of a spectrum analyzer. Analyzer RBW was set to 100 kHz. For each RF output channel investigated, the spectrum analyzer center frequency was set to the channel carrier. A peak output reading was taken, a DISPLAY line was drawn 6 dB lower than peak level. The 6 dB bandwidth was determined from where the channel output spectrum intersected the display line.
The test was performed at 3 channels (Channel low, middle, high)

4.5. Maximum Power Density Measurement

■ **Limit**

For digitally modulated systems, the power spectral density conducted from the intentional radiator to the antenna shall not be greater than 8 dBm in any 3 kHz band during any time interval of continuous transmission.

■ **Test Setup**

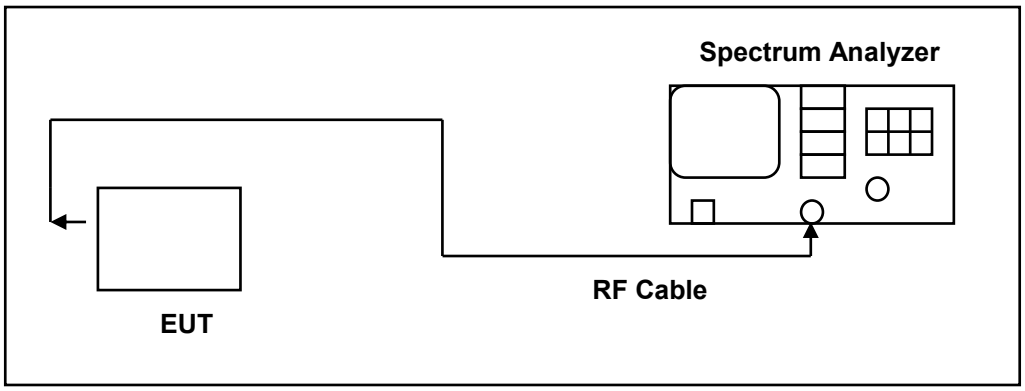

■ **Test Procedure**

The EUT tested to DTS test procedure of ANSI C63.10:2013 section 11.10.2 Method PKPSD.

1. Set analyzer center frequency to DTS channel center frequency.
2. Set the span to 1.5 times the DTS bandwidth.
3. Set the RBW to: 3 kHz ≤ RBW ≤ 100 kHz.
4. Set the VBW ≥ 3 × RBW.
5. Detector = peak.
6. Sweep time = auto couple.
7. Trace mode = max hold.
8. Allow trace to fully stabilize.
9. Use the peak marker function to determine the maximum amplitude level within the RBW.
10. If measured value exceeds limit, reduce RBW (no less than 3 kHz) and repeat.

4.6. Out of Band Conducted Emissions Measurement

■ **Limit**

In any 100 kHz bandwidth outside the frequency band in which the spread spectrum or digitally modulated intentional radiator is operating, the radio frequency power that is produced by the intentional radiator shall be at least 20 dB below that in the 100 kHz bandwidth within the band that contains the highest level of the desired power

■ **Test Setup**

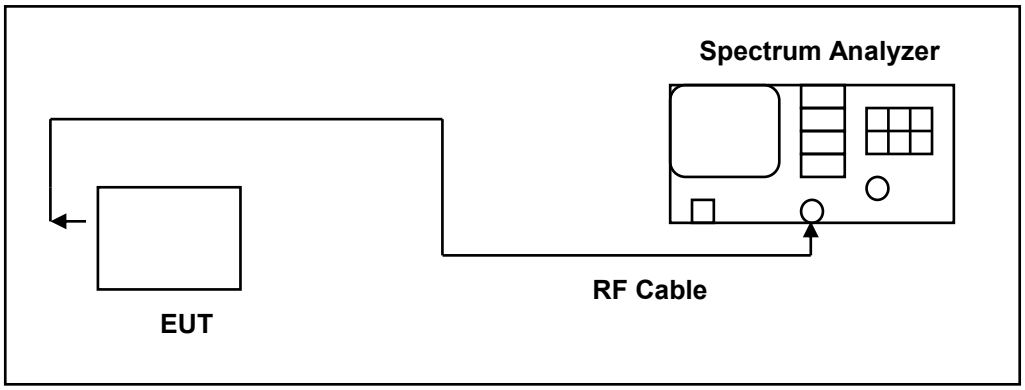

■ **Test Procedure**

In any 100 kHz bandwidth outside the EUT pass band, the RF power produced by the modulation products of the spreading sequence, the information sequence, and the carrier frequency shall be at least 20 dB below that of the maximum in-band 100 kHz emission, antenna output of the EUT was coupled directly to spectrum analyzer; if an external attenuator and/or cable was used, these losses are compensated for with the analyzer OFFSET function.

All other types of emissions from the EUT shall meet the general limits for radiated frequencies outside the pass band.

The test was performed at 3 channels.

4.7. Antenna Measurement

■ **Limit**

For intentional device, according to 15.203, an intentional radiator shall be designed to ensure that no antenna other than that furnished by the responsible party shall be used with the device.

And According to 15.247 (b), if transmitting antennas of directional gain greater than 6 dBi are used, the power shall be reduced by the amount in dB that the directional gain of the antenna exceeds 6 dBi.

■ **Antenna Connector Construction**

See section 2 – antenna information.

5 Test Results

5.1. Conducted Emission

Standard:	Part 15.247	Line:	L1
Test item:	Conducted Emission	Power:	AC 120 V/60 Hz
Mode:	Transmit Mode		
Description:			

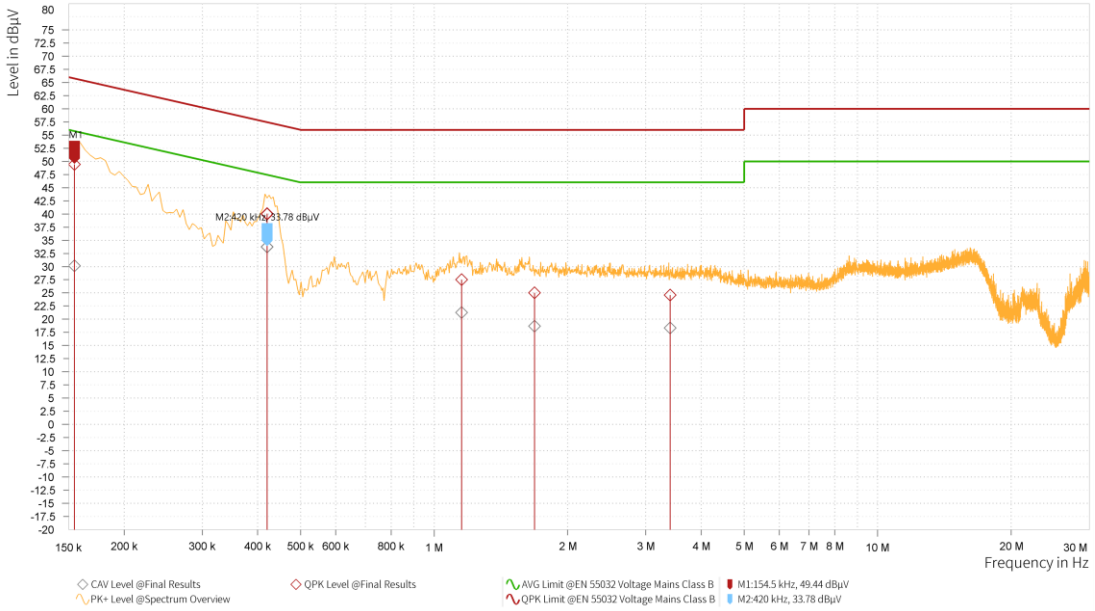

Rg	Frequency [MHz]	QP Result [dBµV]	QP Limit [dBµV]	QP Margin [dB]	AV Result [dBµV]	AV Limit [dBµV]	AV Margin [dB]	Correction factor [dB]	Line
1	0.155	49.44	65.75	16.32	30.17	55.75	25.58	9.65	L1
1	0.420	40.06	57.45	17.39	33.78	47.45	13.67	9.65	L1
1	0.420	40.00	57.45	17.45	33.74	47.45	13.71	9.65	L1
1	1.154	27.52	56.00	28.48	21.26	46.00	24.74	9.69	L1
1	1.685	25.04	56.00	30.96	18.69	46.00	27.31	9.71	L1
1	3.404	24.60	56.00	31.40	18.31	46.00	27.69	9.76	L1

Note: 1. Result (dBuV) = Correction factor (dB) + Reading(dBuV).

2. Correction factor (dB) = Cable loss (dB) + L.I.S.N. factor (dB).

Standard:	Part 15.247	Line:	N
Test item:	Conducted Emission	Power:	AC 120 V/60 Hz
Mode:	Transmit Mode		
Description:			

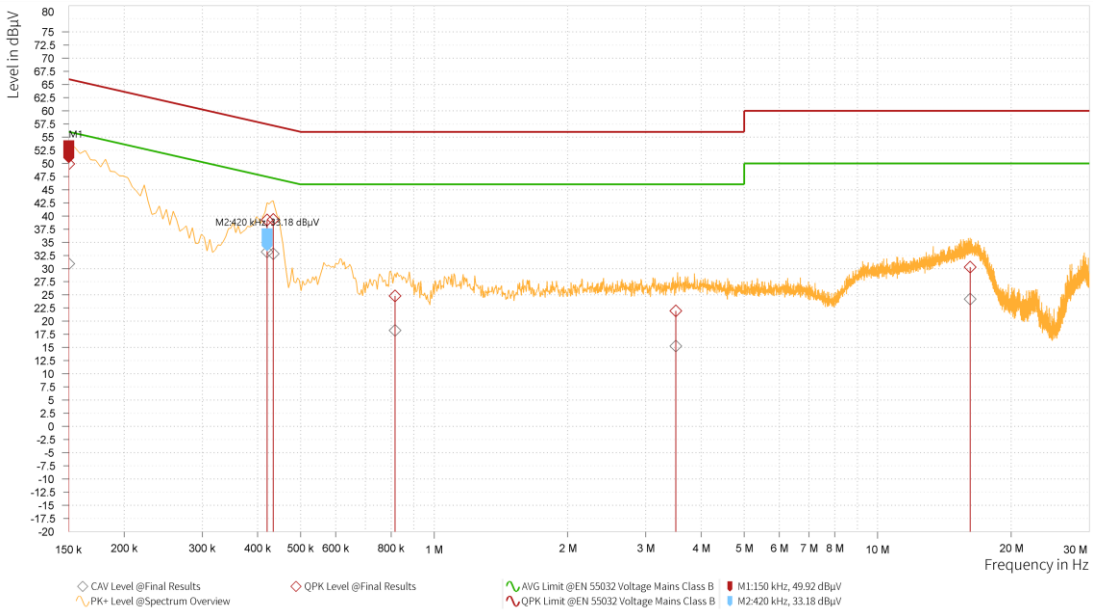

Rg	Frequency [MHz]	QP Result [dBµV]	QP Limit [dBµV]	QP Margin [dB]	AV Result [dBµV]	AV Limit [dBµV]	AV Margin [dB]	Correction factor [dB]	Line
1	0.150	49.92	66.00	16.08	30.92	56.00	25.08	9.64	N
1	0.420	39.25	57.45	18.20	33.18	47.45	14.27	9.65	N
1	0.434	39.35	57.19	17.84	32.81	47.19	14.38	9.65	N
1	0.816	24.82	56.00	31.18	18.26	46.00	27.74	9.67	N
1	3.507	21.94	56.00	34.06	15.28	46.00	30.72	9.77	N
1	16.166	30.27	60.00	29.73	24.20	50.00	25.80	10.13	N

Note: 1. Result (dBuV) = Correction factor (dB) + Reading(dBuV).

2. Correction factor (dB) = Cable loss (dB) + L.I.S.N. factor (dB).

5.2. Conducted Test Results

Duty cycle
Reference Appendix A / Appendix B

Maximum Conducted Output Power Measurement
Reference Appendix A

6 dB RF Bandwidth Measurement
Reference Appendix A / Appendix B

Maximum Power Density Measurement
Reference Appendix A / Appendix B

Out of Band Conducted Emissions Measurement
Reference level
Reference Appendix B

Out of Band Conducted Emissions
Reference Appendix B

Conducted Band Edge
Reference Appendix B

5.3. Radiated Emission Measurement

Below 1 GHz

Test Site:	96602 - WG	Standard:	Part 15.247
Test Mode:	Transmit Mode		
Polarization:	Horizontal		
ReMark:			

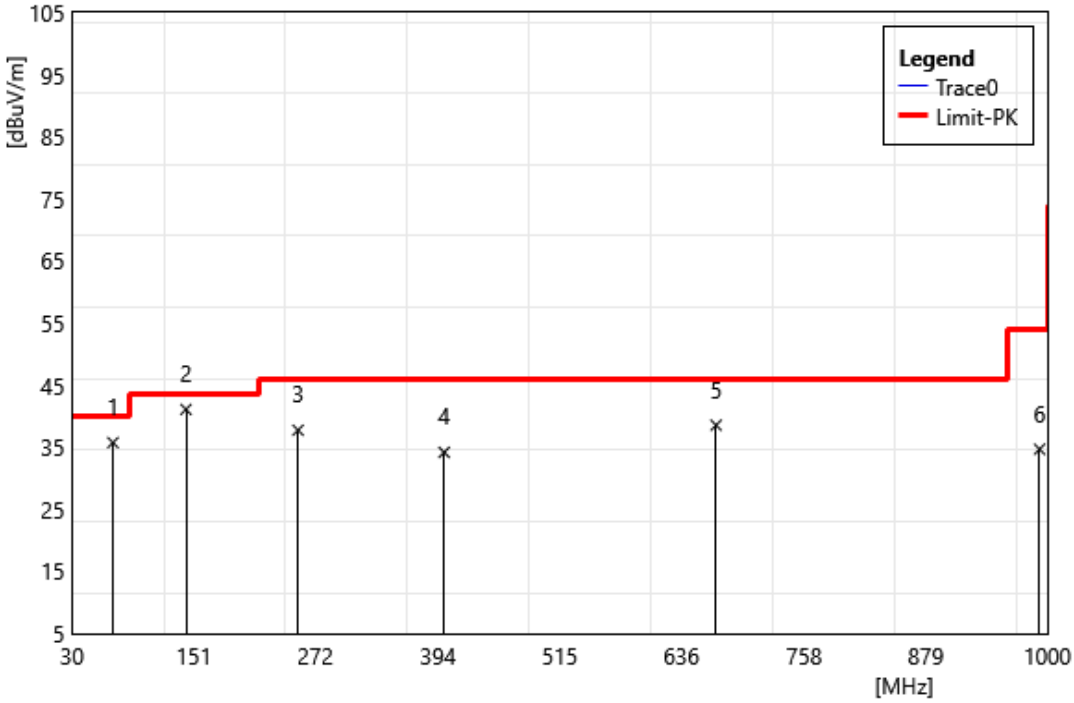

ID	Frequency MHz	Reading dBuV	Correct Factor dB/m	Result dBuV/m	Limit dBuV/m	Margin dB	ReMark
1	70.70	46.12	-10.37	35.75	40.00	-4.25	QP
2	143.38	48.54	-7.46	41.09	43.50	-2.42	QP
3	254.82	45.72	-7.98	37.74	46.00	-8.26	QP
4	400.17	38.92	-4.74	34.18	46.00	-11.82	QP
5	670.53	38.41	0.15	38.56	46.00	-7.44	QP
6	992.25	29.59	5.09	34.68	54.00	-19.32	QP

Test Site:	96602 - WG	Standard:	Part 15.247
Test Mode:	Transmit Mode		
Polarization:	Vertical		
ReMark:			

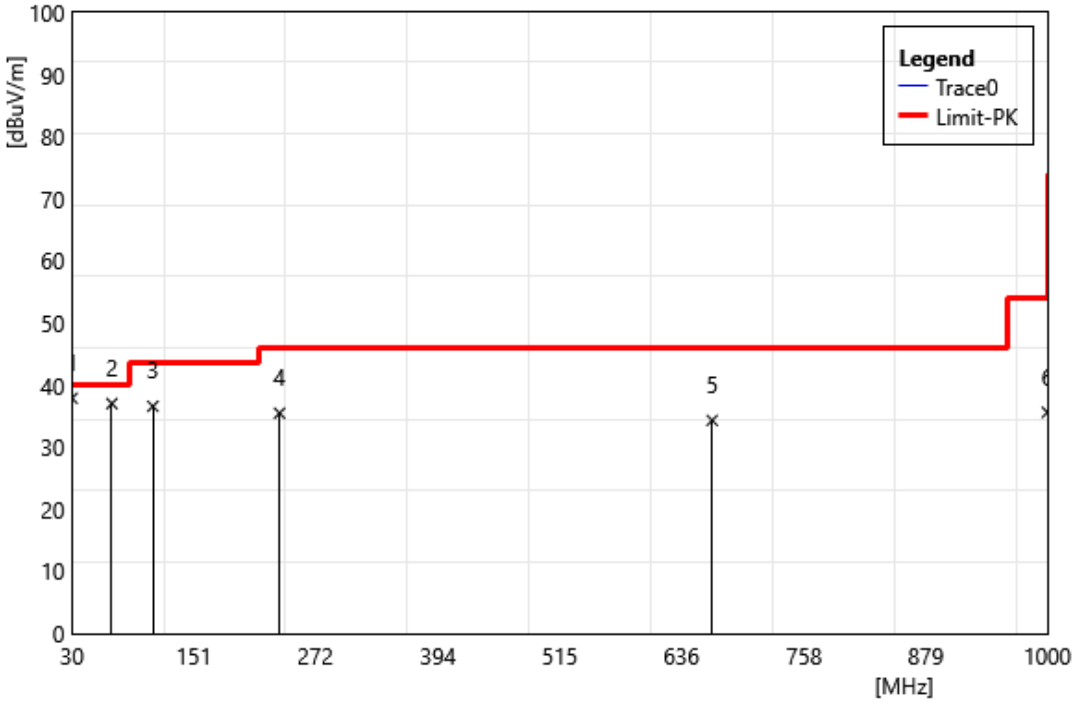

ID	Frequency MHz	Reading dBuV	Correct Factor dB/m	Result dBuV/m	Limit dBuV/m	Margin dB	ReMark
1	30.00	47.65	-9.75	37.90	40.00	-2.10	QP
2	69.73	47.29	-10.26	37.03	40.00	-2.97	QP
3	110.43	47.18	-10.59	36.59	43.50	-6.91	QP
4	236.40	44.21	-8.72	35.49	46.00	-10.51	QP
5	666.65	34.18	0.14	34.32	46.00	-11.68	QP
6	1000.00	30.38	5.25	35.63	74.00	-38.37	QP

Harmonic

Above 1 GHz

Test Site:	96602 - WG	Standard:	Part 15.247
Test Mode:	BLE 2M 2402 MHz		
Polarization:	Horizontal		
ReMark:			

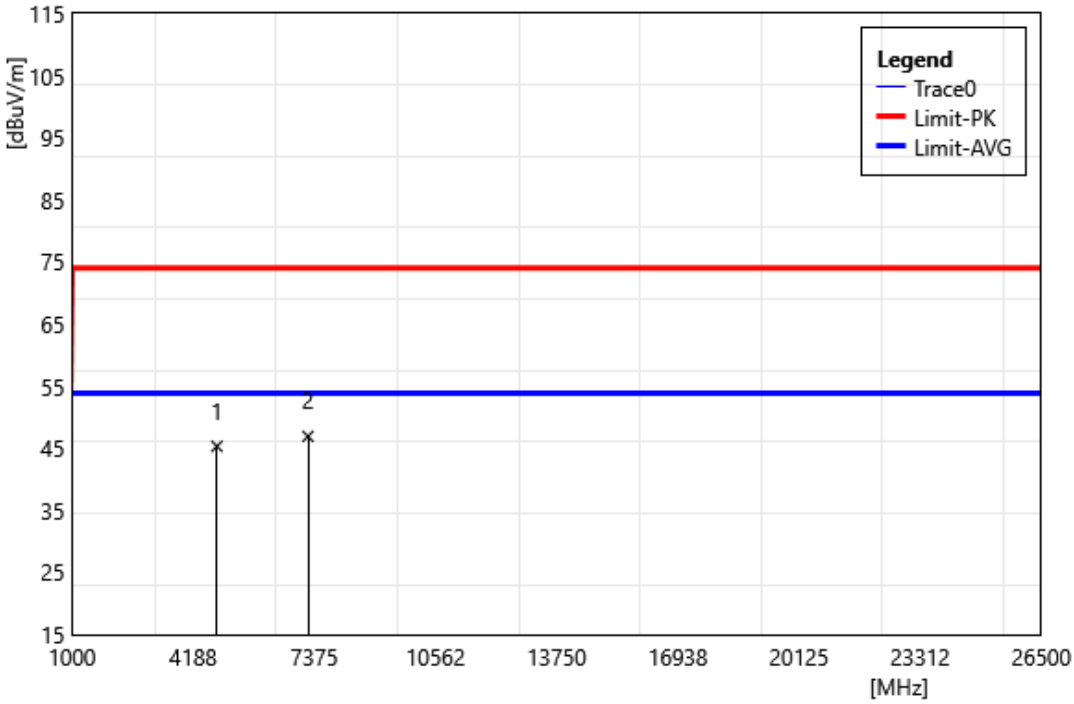

ID	Frequency MHz	Reading dBuV	Correct Factor dB/m	Result dBuV/m	Limit dBuV/m	Margin dB	ReMark
1	4804.00	43.83	1.49	45.32	74.00	-28.68	PEAK
2	7206.00	39.96	6.95	46.91	74.00	-27.09	PEAK

Test Site:	96602 - WG	Standard:	Part 15.247
Test Mode:	BLE 2M 2402 MHz		
Polarization:	Vertical		
ReMark:			

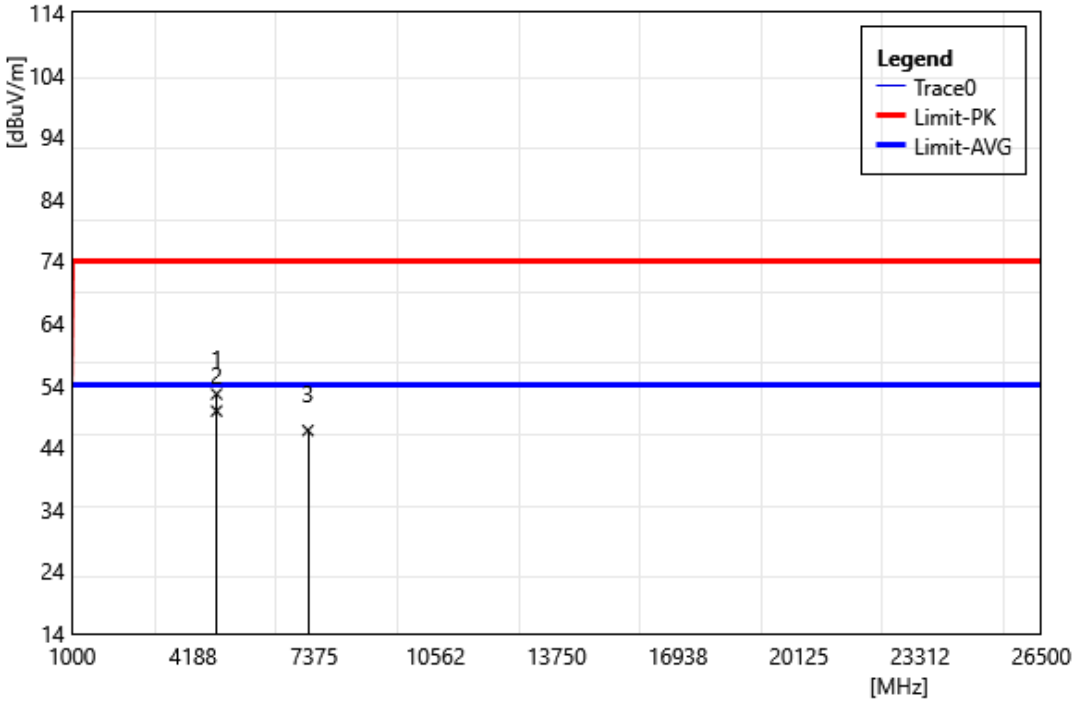

ID	Frequency MHz	Reading dBuV	Correct Factor dB/m	Result dBuV/m	Limit dBuV/m	Margin dB	ReMark
1	4804.00	51.12	1.44	52.56	74.00	-21.44	PEAK
2	4804.00	48.40	1.44	49.84	54.00	-4.16	AVG
3	7206.00	39.76	6.95	46.71	74.00	-27.29	PEAK

Test Site:	96602 - WG	Standard:	Part 15.247
Test Mode:	BLE 2M 2440 MHz		
Polarization:	Horizontal		
ReMark:			

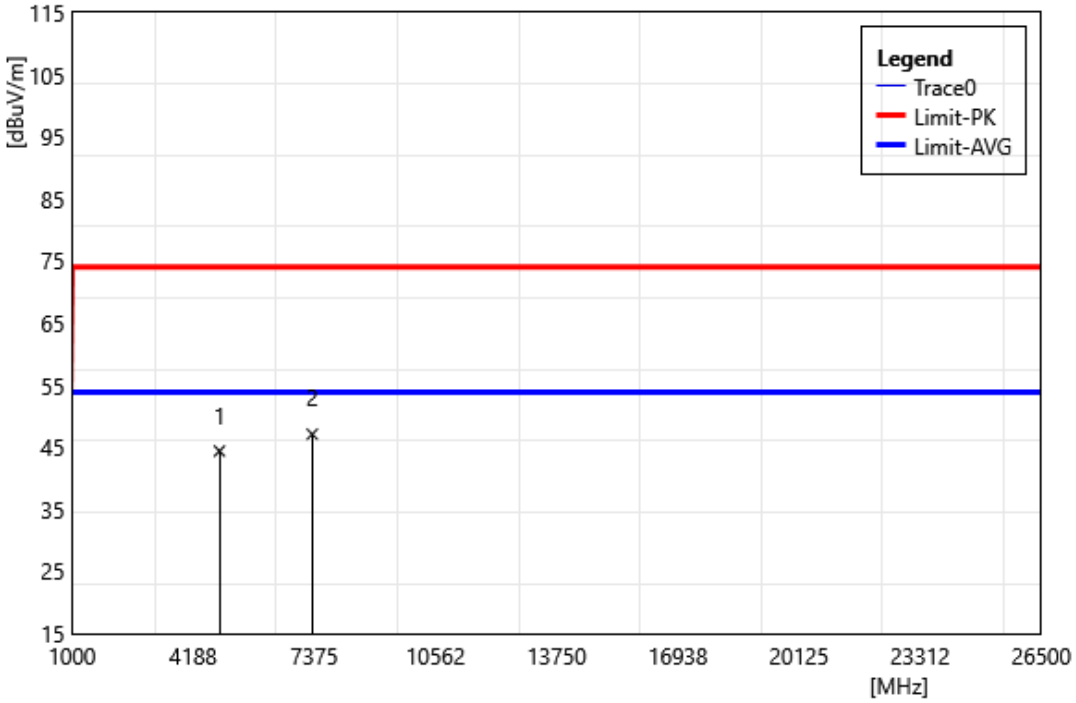

ID	Frequency MHz	Reading dBuV	Correct Factor dB/m	Result dBuV/m	Limit dBuV/m	Margin dB	ReMark
1	4880.00	42.90	1.49	44.39	74.00	-29.61	PEAK
2	7320.00	39.98	7.13	47.11	74.00	-26.89	PEAK

Test Site:	96602 - WG	Standard:	Part 15.247
Test Mode:	BLE 2M 2440 MHz		
Polarization:	Vertical		
ReMark:			

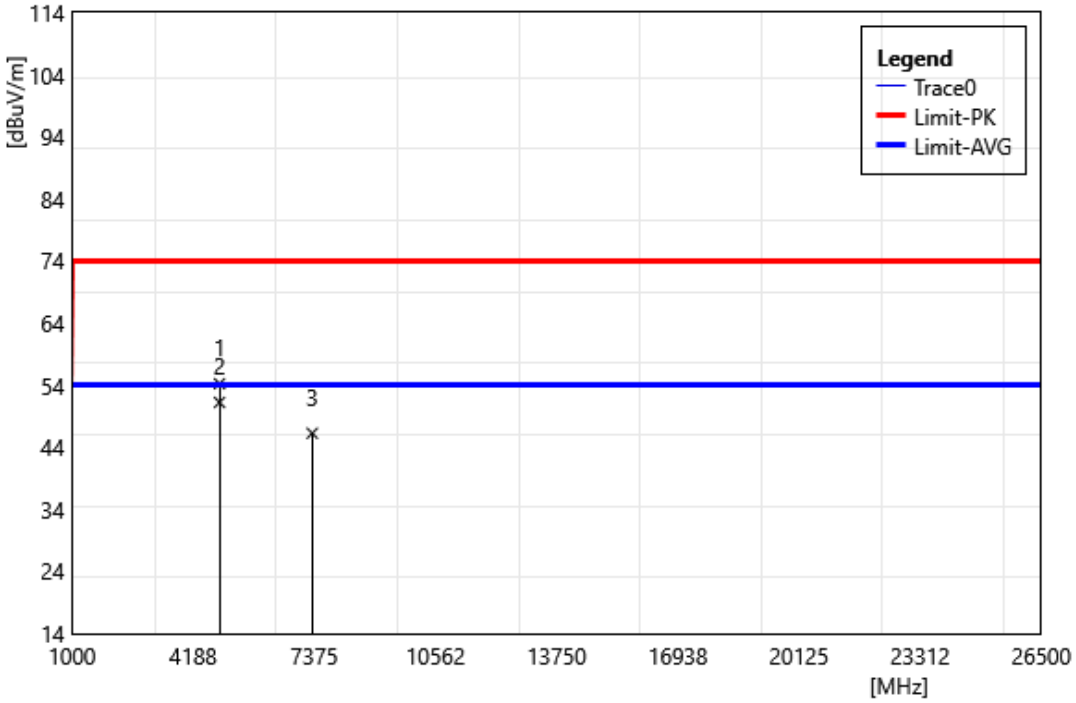

ID	Frequency MHz	Reading dBuV	Correct Factor dB/m	Result dBuV/m	Limit dBuV/m	Margin dB	ReMark
1	4880.00	52.75	1.48	54.23	74.00	-19.77	PEAK
2	4880.00	49.73	1.49	51.22	54.00	-2.78	AVG
3	7320.00	39.12	7.13	46.26	74.00	-27.74	PEAK

Test Site:	96602 - WG	Standard:	Part 15.247
Test Mode:	BLE 2M 2480 MHz		
Polarization:	Horizontal		
ReMark:			

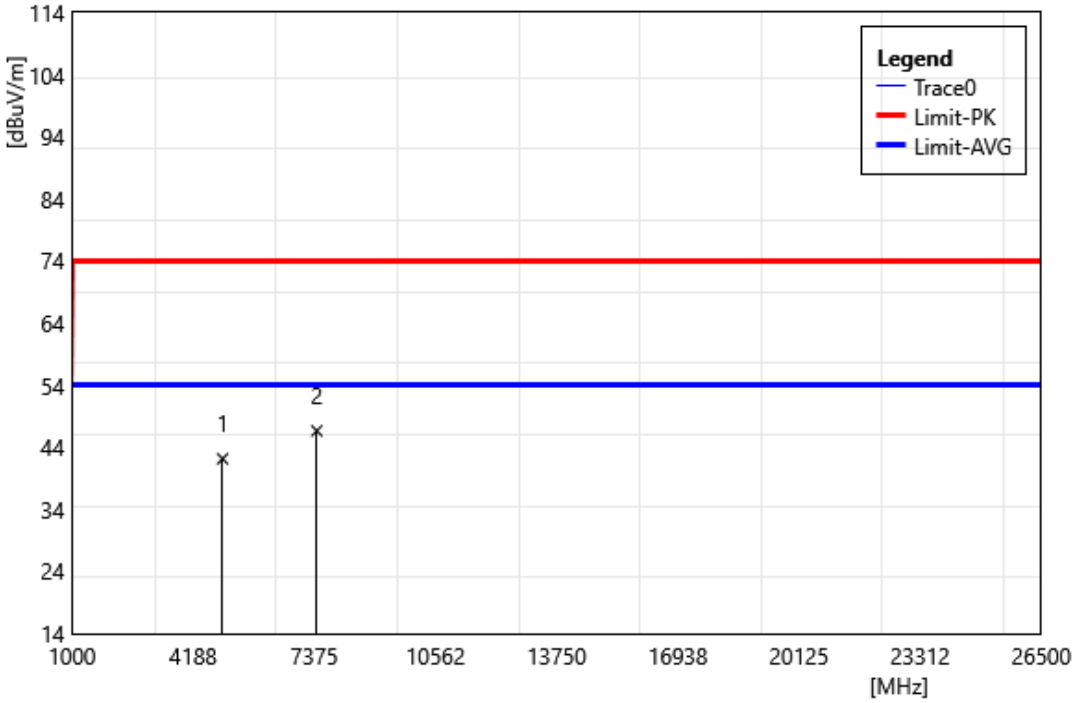

ID	Frequency MHz	Reading dBuV	Correct Factor dB/m	Result dBuV/m	Limit dBuV/m	Margin dB	ReMark
1	4960.00	40.28	1.86	42.14	74.00	-31.86	PEAK
2	7440.00	39.62	7.03	46.65	74.00	-27.35	PEAK

Test Site:	96602 - WG	Standard:	Part 15.247
Test Mode:	BLE 2M 2480 MHz		
Polarization:	Vertical		
ReMark:			

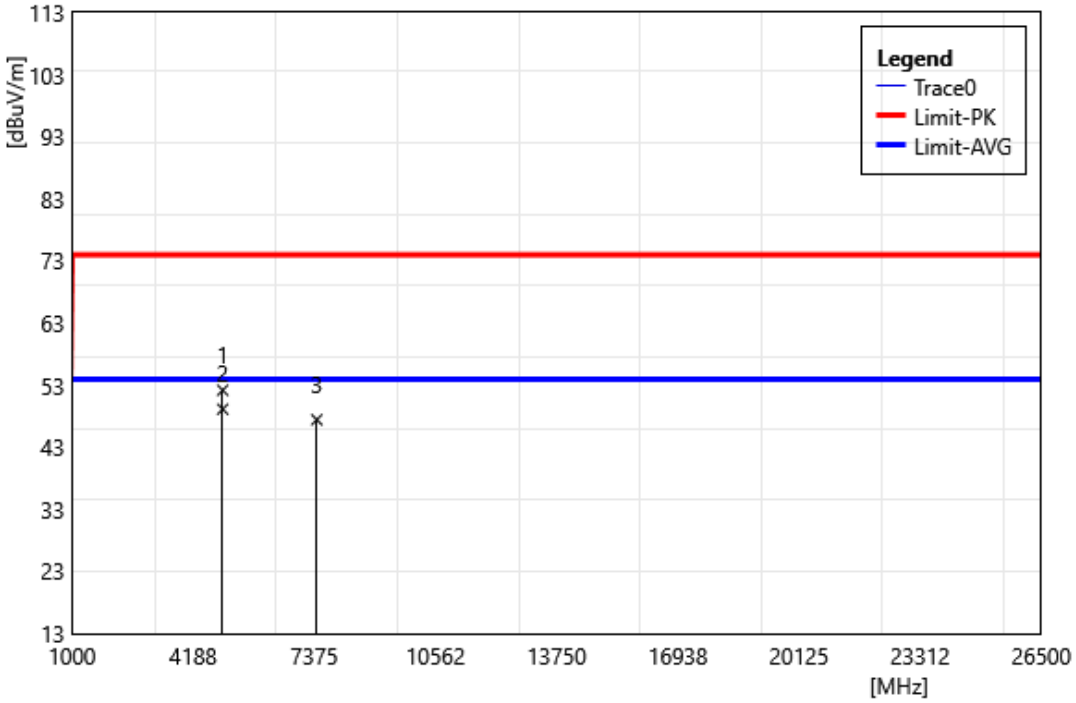

ID	Frequency MHz	Reading dBuV	Correct Factor dB/m	Result dBuV/m	Limit dBuV/m	Margin dB	ReMark
1	4960.00	50.36	1.82	52.18	74.00	-21.82	PEAK
2	4960.00	47.27	1.86	49.13	54.00	-4.87	AVG
3	7440.00	40.40	7.03	47.43	74.00	-26.57	PEAK

Test Site:	96602 - WG	Standard:	Part 15.247
Test Mode:	BLE C8 2402 MHz		
Polarization:	Horizontal		
ReMark:			

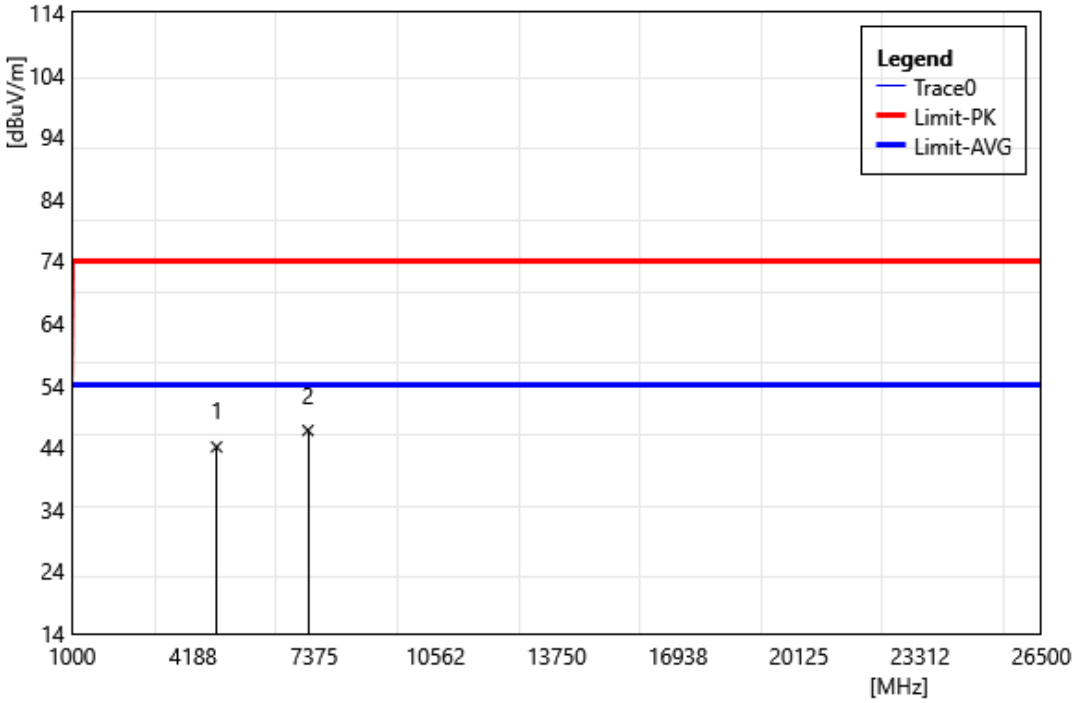

ID	Frequency MHz	Reading dBuV	Correct Factor dB/m	Result dBuV/m	Limit dBuV/m	Margin dB	ReMark
1	4804.00	42.60	1.44	44.04	74.00	-29.96	PEAK
2	7206.00	39.75	6.95	46.70	74.00	-27.30	PEAK

Test Site:	96602 - WG	Standard:	Part 15.247
Test Mode:	BLE C8 2402 MHz		
Polarization:	Vertical		
ReMark:			

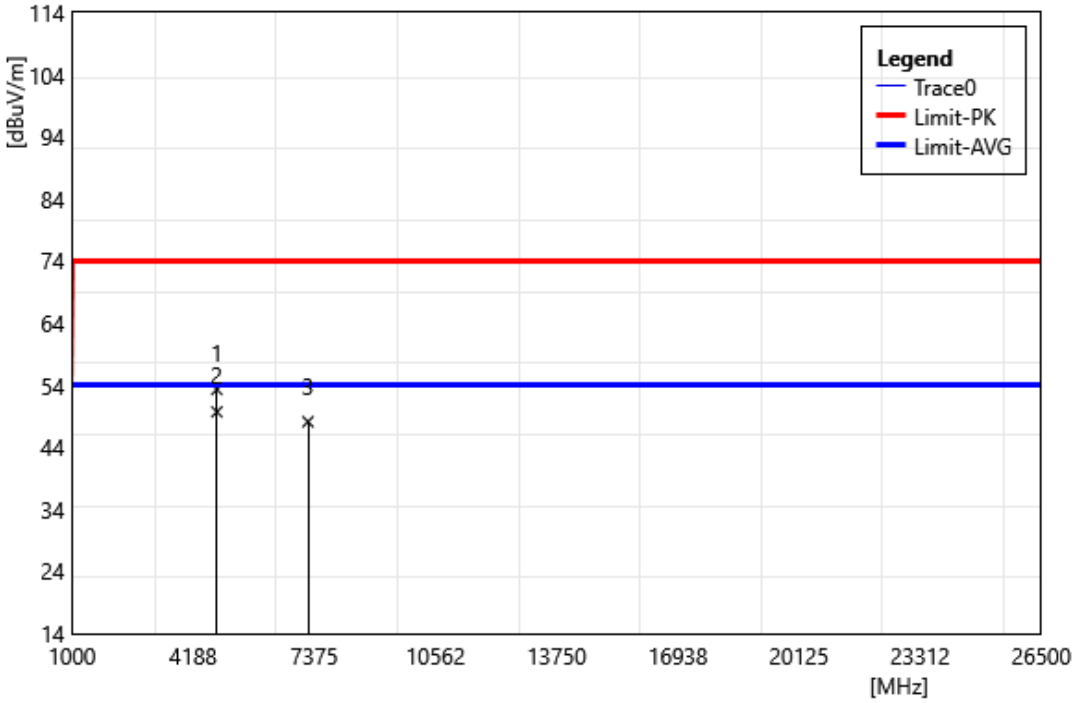

ID	Frequency MHz	Reading dBuV	Correct Factor dB/m	Result dBuV/m	Limit dBuV/m	Margin dB	ReMark
1	4804.00	51.82	1.49	53.31	74.00	-20.69	PEAK
2	4804.00	48.26	1.44	49.70	54.00	-4.30	AVG
3	7206.00	41.16	6.95	48.11	74.00	-25.89	PEAK

Test Site:	96602 - WG	Standard:	Part 15.247
Test Mode:	BLE C8 2440 MHz		
Polarization:	Horizontal		
ReMark:			

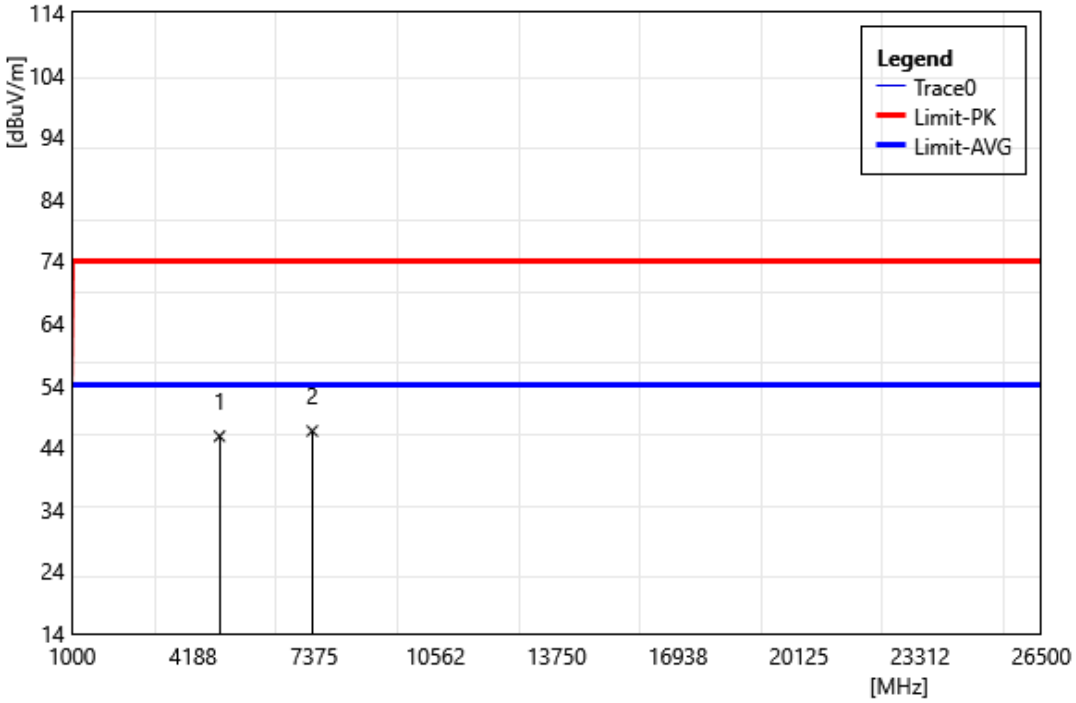

ID	Frequency MHz	Reading dBuV	Correct Factor dB/m	Result dBuV/m	Limit dBuV/m	Margin dB	ReMark
1	4880.00	44.30	1.48	45.78	74.00	-28.22	PEAK
2	7320.00	39.49	7.13	46.62	74.00	-27.38	PEAK

Test Site:	96602 - WG	Standard:	Part 15.247
Test Mode:	BLE C8 2440 MHz		
Polarization:	Vertical		
ReMark:			

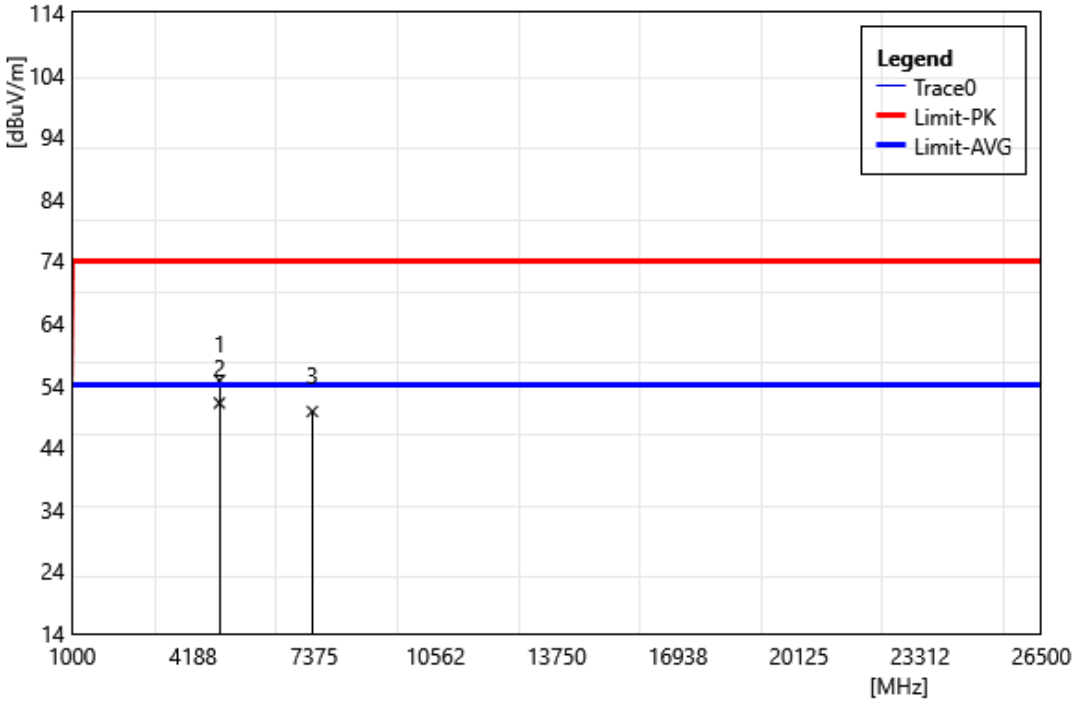

ID	Frequency MHz	Reading dBuV	Correct Factor dB/m	Result dBuV/m	Limit dBuV/m	Margin dB	ReMark
1	4880.00	53.29	1.48	54.77	74.00	-19.23	PEAK
2	4880.00	49.63	1.49	51.12	54.00	-2.88	AVG
3	7320.00	42.62	7.13	49.75	74.00	-24.25	PEAK

Test Site:	96602 - WG	Standard:	Part 15.247
Test Mode:	BLE C8 2480 MHz		
Polarization:	Horizontal		
ReMark:			

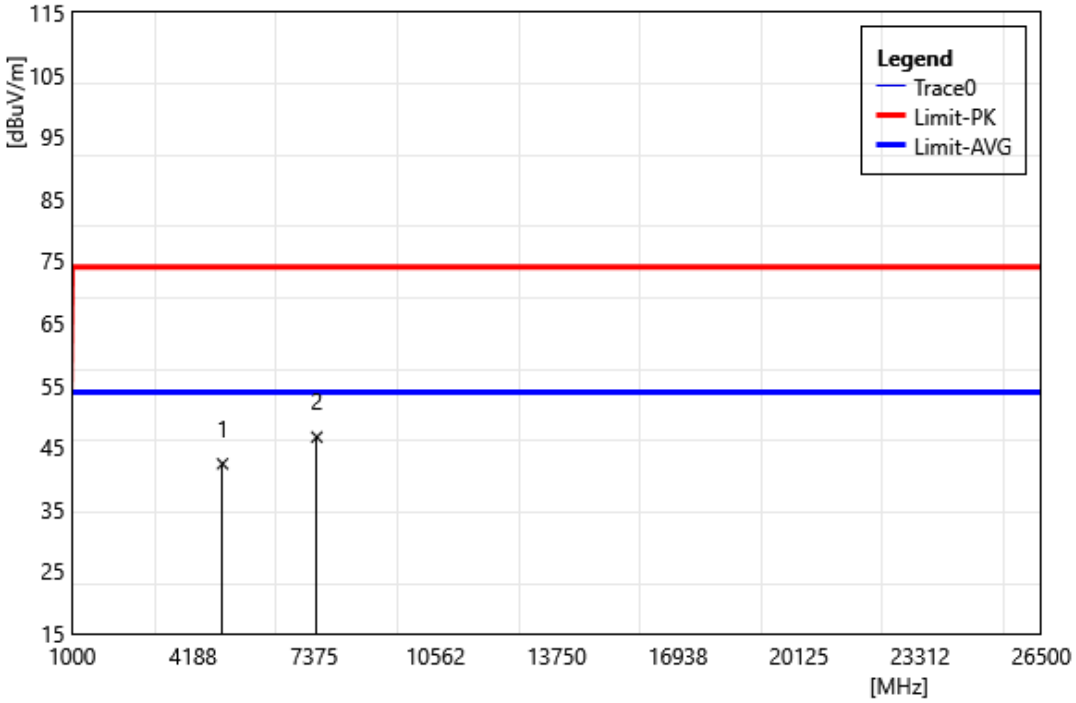

ID	Frequency MHz	Reading dBuV	Correct Factor dB/m	Result dBuV/m	Limit dBuV/m	Margin dB	ReMark
1	4960.00	40.48	1.86	42.34	74.00	-31.66	PEAK
2	7440.00	39.60	7.03	46.64	74.00	-27.36	PEAK

Test Site:	96602 - WG	Standard:	Part 15.247
Test Mode:	BLE C8 2480 MHz		
Polarization:	Vertical		
ReMark:			

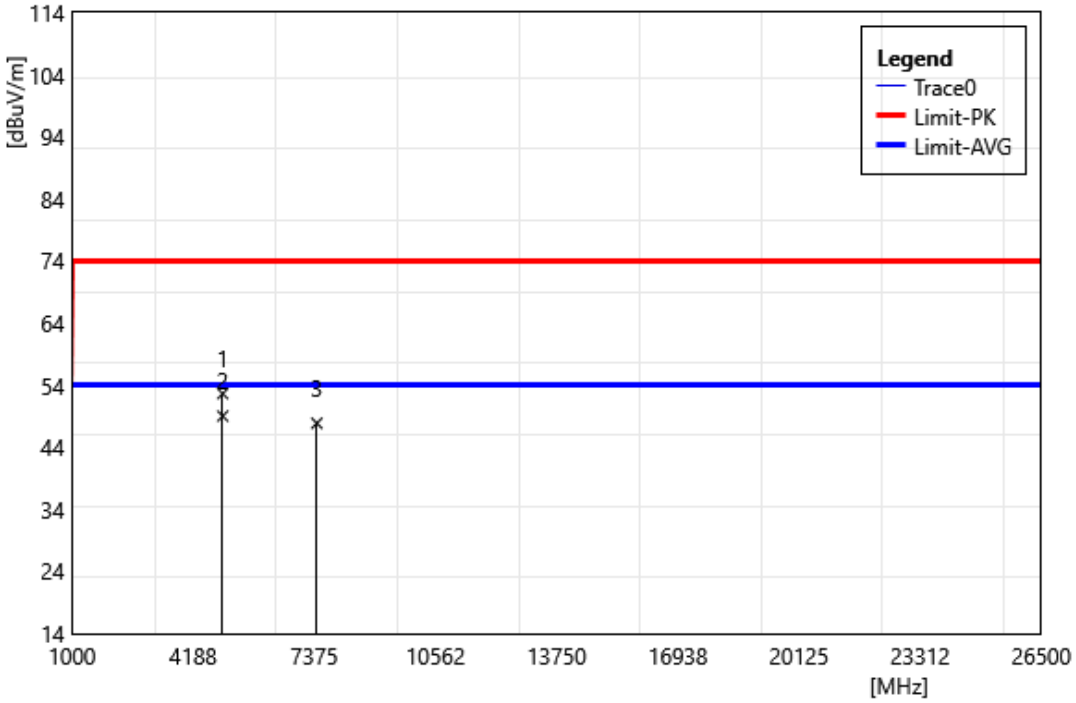

ID	Frequency MHz	Reading dBuV	Correct Factor dB/m	Result dBuV/m	Limit dBuV/m	Margin dB	ReMark
1	4960.00	50.82	1.82	52.64	74.00	-21.36	PEAK
2	4960.00	47.16	1.86	49.02	54.00	-4.98	AVG
3	7440.00	40.83	7.03	47.87	74.00	-26.13	PEAK

Band Edge

Test Site:	96602 - WG	Standard:	Part 15.247
Test Mode:	BLE 2M 2402 MHz		
Polarization:	Horizontal		
ReMark:			

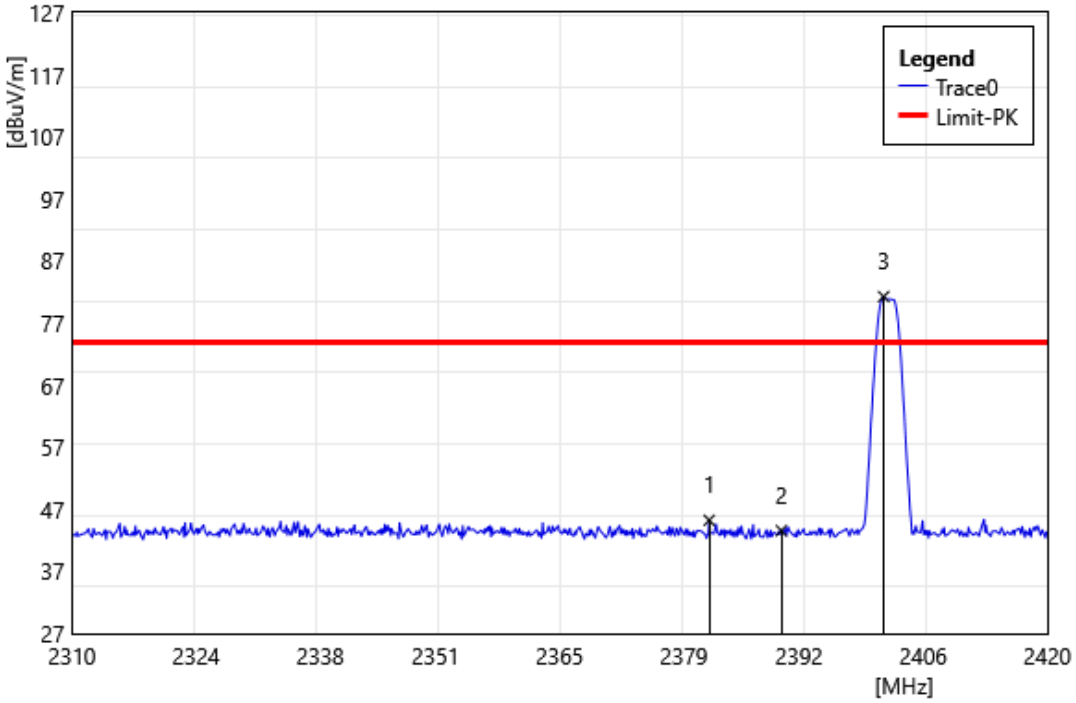

ID	Frequency MHz	Reading dBuV	Correct Factor dB/m	Result dBuV/m	Limit dBuV/m	Margin dB	ReMark
1	2381.87	49.89	-4.66	45.23	74.00	-28.77	PEAK
2	2390.00	48.26	-4.69	43.57	74.00	-30.43	PEAK
3	2401.54	86.00	-4.74	81.26	74.00	7.26	PEAK

Test Site:	96602 - WG	Standard:	Part 15.247
Test Mode:	BLE 2M 2402 MHz		
Polarization:	Vertical		
ReMark:			

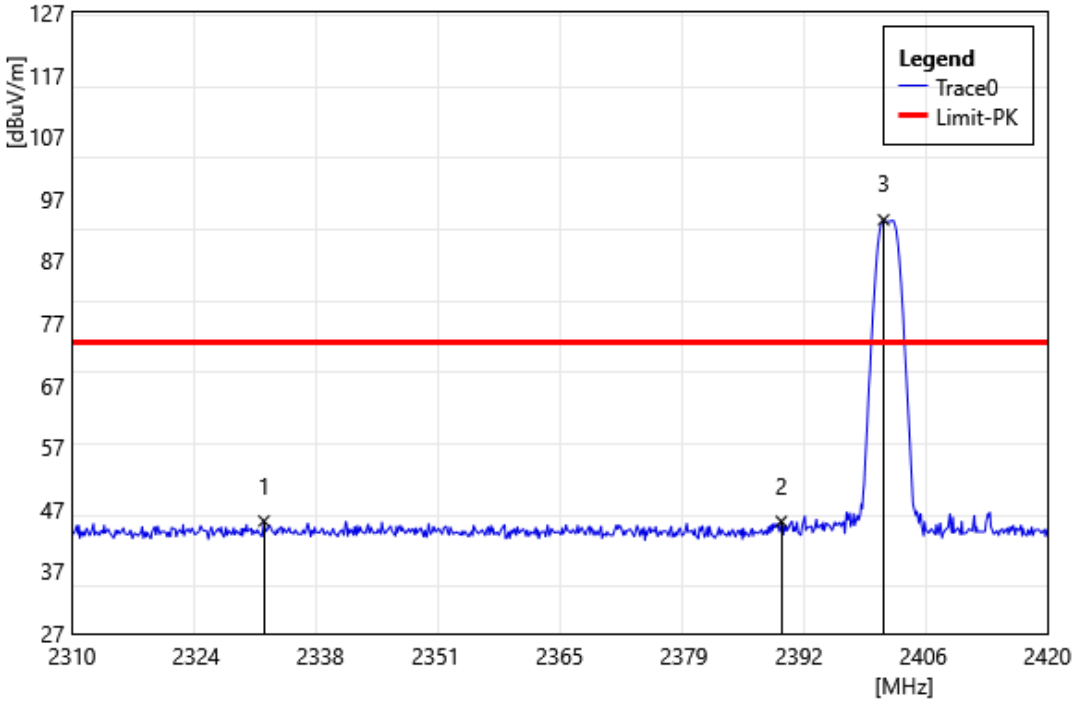

ID	Frequency MHz	Reading dBuV	Correct Factor dB/m	Result dBuV/m	Limit dBuV/m	Margin dB	ReMark
1	2331.65	49.62	-4.50	45.12	74.00	-28.88	PEAK
2	2390.00	49.74	-4.69	45.05	74.00	-28.95	PEAK
3	2401.54	98.37	-4.74	93.63	74.00	19.63	PEAK

Test Site:	96602 - WG	Standard:	Part 15.247
Test Mode:	BLE 2M 2480 MHz		
Polarization:	Horizontal		
ReMark:			

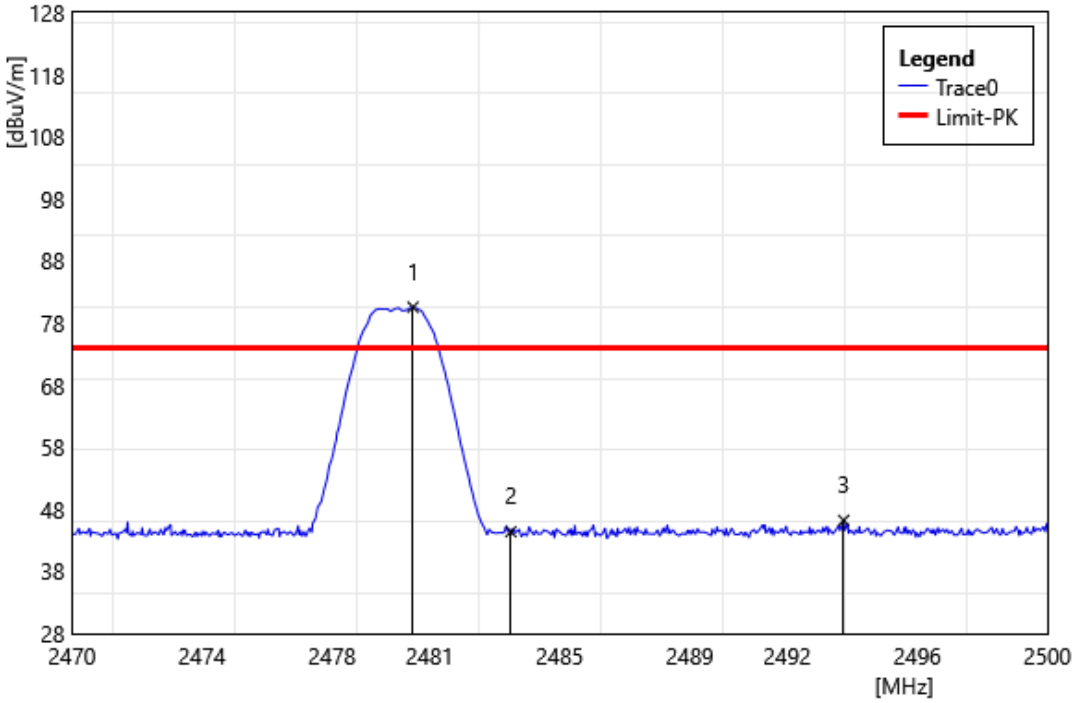

ID	Frequency MHz	Reading dBuV	Correct Factor dB/m	Result dBuV/m	Limit dBuV/m	Margin dB	ReMark
1	2480.49	85.41	-4.84	80.57	74.00	6.57	PEAK
2	2483.50	49.25	-4.85	44.40	74.00	-29.60	PEAK
3	2493.74	51.06	-4.84	46.22	74.00	-27.78	PEAK

Test Site:	96602 - WG	Standard:	Part 15.247
Test Mode:	BLE 2M 2402 MHz		
Polarization:	Vertical		
ReMark:			

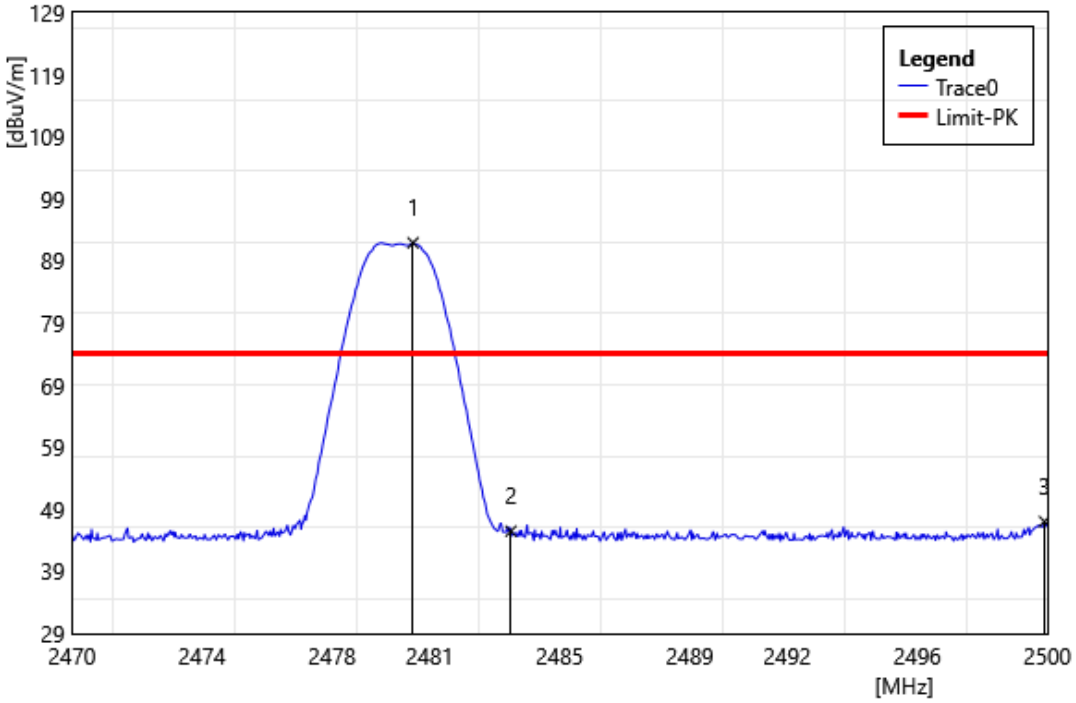

ID	Frequency MHz	Reading dBuV	Correct Factor dB/m	Result dBuV/m	Limit dBuV/m	Margin dB	ReMark
1	2480.49	96.76	-4.84	91.92	74.00	17.92	PEAK
2	2483.50	50.33	-4.85	45.48	74.00	-28.52	PEAK
3	2499.91	51.89	-4.85	47.04	74.00	-26.96	PEAK

Test Site:	96602 - WG	Standard:	Part 15.247
Test Mode:	BLE C8 2402 MHz		
Polarization:	Horizontal		
ReMark:			

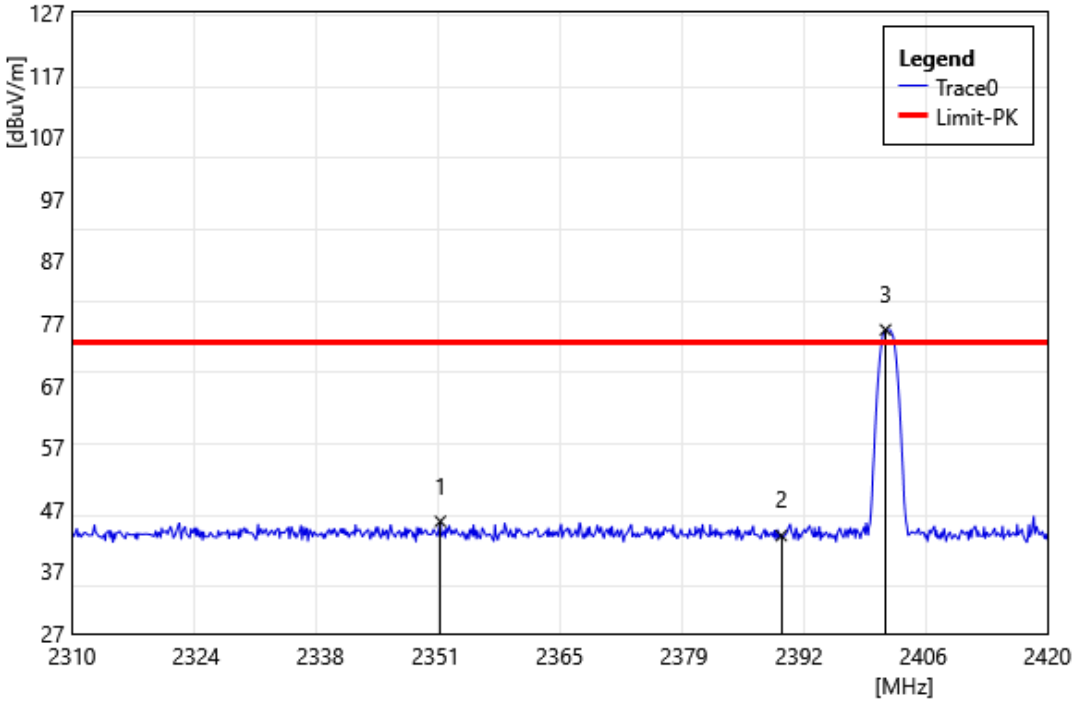

ID	Frequency MHz	Reading dBuV	Correct Factor dB/m	Result dBuV/m	Limit dBuV/m	Margin dB	ReMark
1	2351.54	49.58	-4.52	45.06	74.00	-28.94	PEAK
2	2390.00	47.45	-4.69	42.76	74.00	-31.24	PEAK
3	2401.76	80.65	-4.74	75.91	74.00	1.91	PEAK

Test Site:	96602 - WG	Standard:	Part 15.247
Test Mode:	BLE C8 2402 MHz		
Polarization:	Vertical		
ReMark:			

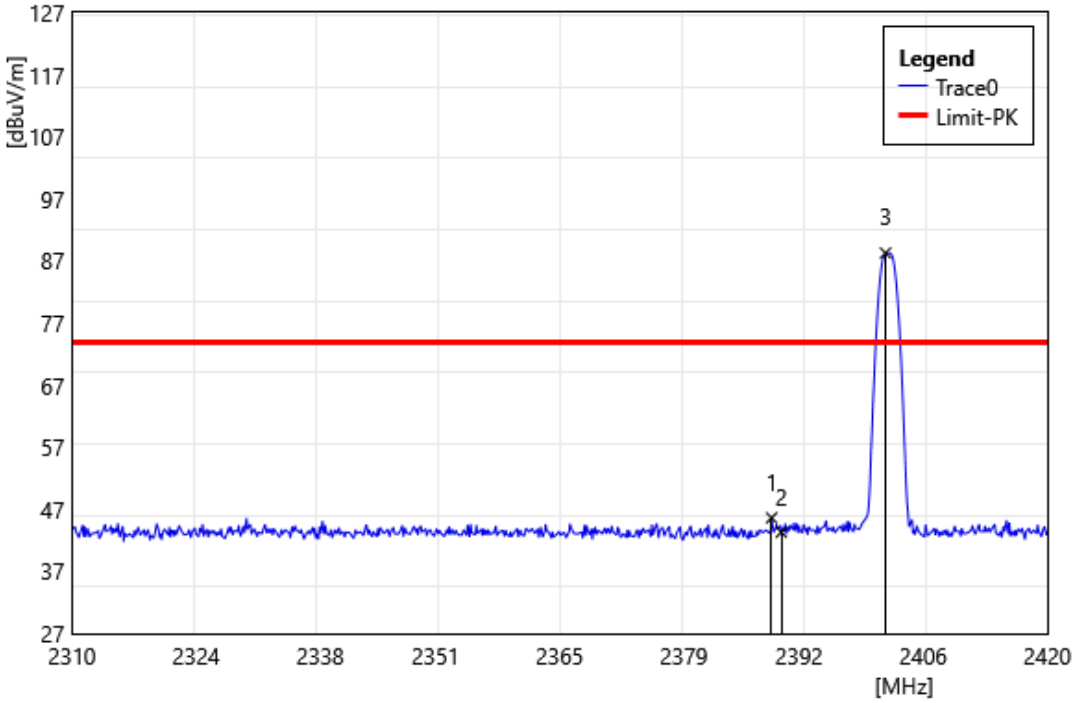

ID	Frequency MHz	Reading dBuV	Correct Factor dB/m	Result dBuV/m	Limit dBuV/m	Margin dB	ReMark
1	2388.90	50.32	-4.69	45.63	74.00	-28.37	PEAK
2	2390.00	48.02	-4.69	43.33	74.00	-30.67	PEAK
3	2401.76	93.03	-4.74	88.29	74.00	14.29	PEAK

Test Site:	96602 - WG	Standard:	Part 15.247
Test Mode:	BLE C8 2480 MHz		
Polarization:	Horizontal		
ReMark:			

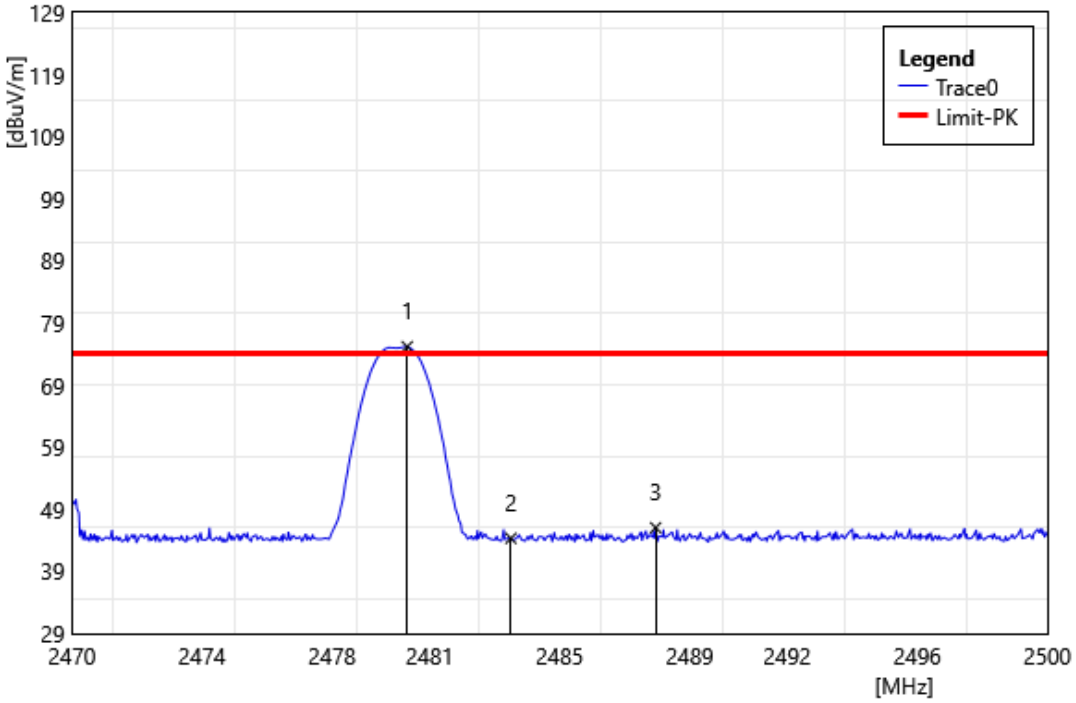

ID	Frequency MHz	Reading dBuV	Correct Factor dB/m	Result dBuV/m	Limit dBuV/m	Margin dB	ReMark
1	2480.31	80.04	-4.84	75.20	74.00	1.20	PEAK
2	2483.50	49.19	-4.85	44.34	74.00	-29.66	PEAK
3	2487.95	50.90	-4.85	46.05	74.00	-27.95	PEAK

Test Site:	96602 - WG	Standard:	Part 15.247
Test Mode:	BLE C8 2480 MHz		
Polarization:	Vertical		
ReMark:			

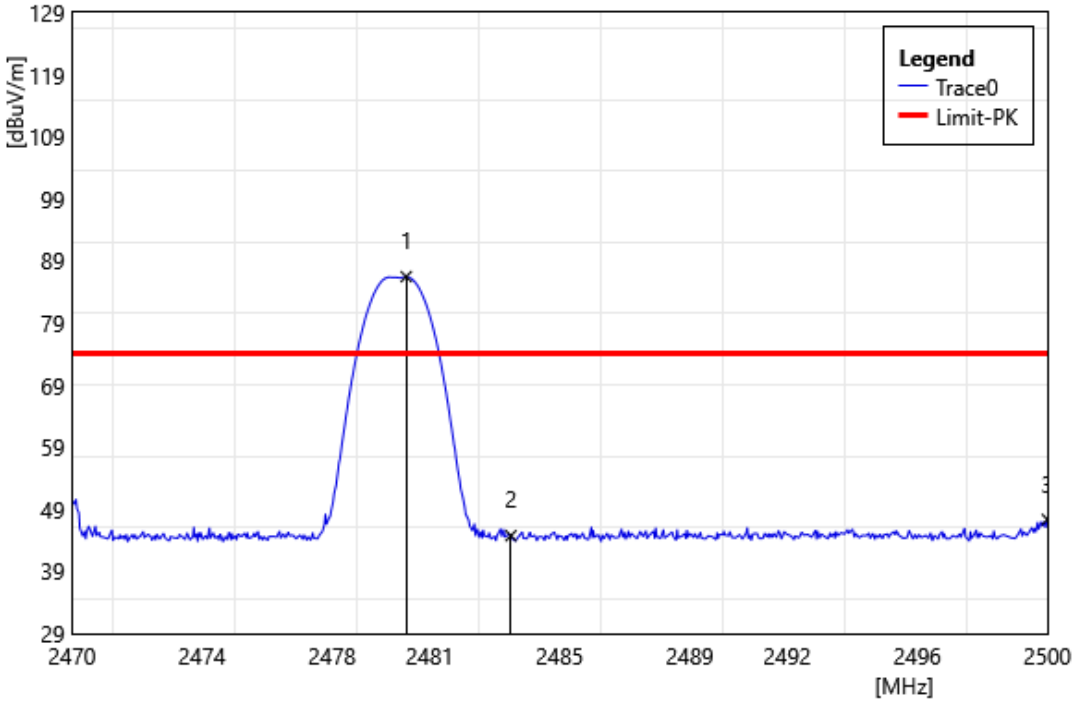

ID	Frequency MHz	Reading dBuV	Correct Factor dB/m	Result dBuV/m	Limit dBuV/m	Margin dB	ReMark
1	2480.28	91.32	-4.84	86.48	74.00	12.48	PEAK
2	2483.50	49.61	-4.85	44.76	74.00	-29.24	PEAK
3	2500.00	52.22	-4.85	47.37	74.00	-26.63	PEAK

---END---