MINEWSEMI

WiFi6 + BLE5.3 ComboModule

MS12SF1

DateSheet

V 1.2.0

Applicable Product Model
MS12SF1

Copyright© Shenzhen Minewsemi Co., Ltd.

Version Note

Version	Details	Contributor(s)	Date	Notes
1.0.0	First edit	Vincle	2022.12.21	First edit
1.1.0	Update GPIOs	Vincle	2023.02.16	Revised
1.2.0	Update pack information	Vincle	2023.06.09	Revised

Web：www.minewsemi.com Tel：0755-2801 0353 E-mail：minewsemi@minew.com
Copyright© Shenzhen Minewsemi Co., Ltd.

MS12SF1-nRF7002+nRF5340

Dual-Core,High-performance,ultra-low-power,Support At/STA Mode,Support WiFi6 Dual-band that 2.4G and 5G ,1T1R

MS12SF1 WiFi Module adopts integrated nRF7002 and nRF5340 chip, supports BLE mode, at the same time supports WiFi6 dual-band connection, 2.4G and 5G function adopts WiFi and BLE independent antenna design, have no crosstalk between functions. One device can support two wireless connection mode of WiFi and BLE. output Maximum power up to 21dBm, receiving current in 2.4G frequency region is 56mA, while in 5G frequency region is 58mA, meanwhile supports BLE master/slave mode and passthrough mode, adopts WiFi and BLE independent design, no crosstalk.

Features

- Bluetooth 5.3
- Dual-Core
- Ultra-low-power
- High-performance
- Support WiFi6 Dual-band that 2.4G and 5G ,1T1R

Application

Smart Buildings

Intelligent wearable device

Smart Healthcare

Consumer electronics

Automotive Devices

Smart Agriculture

Key parameter

Chip Model	nRF7002+nRF5340	**Antenna**	PCB/IPEX
Module size	27×23.5×2.8mm	**GPIO**	29
Flash	1MB+256KB	**RAM**	512KB+64KB
Receiving Sensitivity	-98dBm	**Transmission Power**	BLE:-40 ~ +3dBm WiFi:+21dBm
Current(TX)	2.4G-191mA 5G-260mA	**Current(RX)**	2.4G-56mA 5G-58mA
Firmware	/		

Web：www.minewsemi.com Tel：0755-2801 0353 E-mail：minewsemi@minew.com

Copyright© Shenzhen Minewsemi Co., Ltd.

INDEX

1 Block Diagram.....5

2 Electrical Specification.....5

3 Pin Description 6

4 Pin Definition.....7

5 Mechanical Drawing 8

6 Power supply module 8

6.1 Power supply 8

7 Electrical Schematic.....9

8 PCB Layout 10

9 Reflow and Soldering.....12

10 Package Information 15

Quality.....16

Contact Us 16

Copyright Statement 17

Copyright© Shenzhen Minewsemi Co., Ltd.

1 Block Diagram

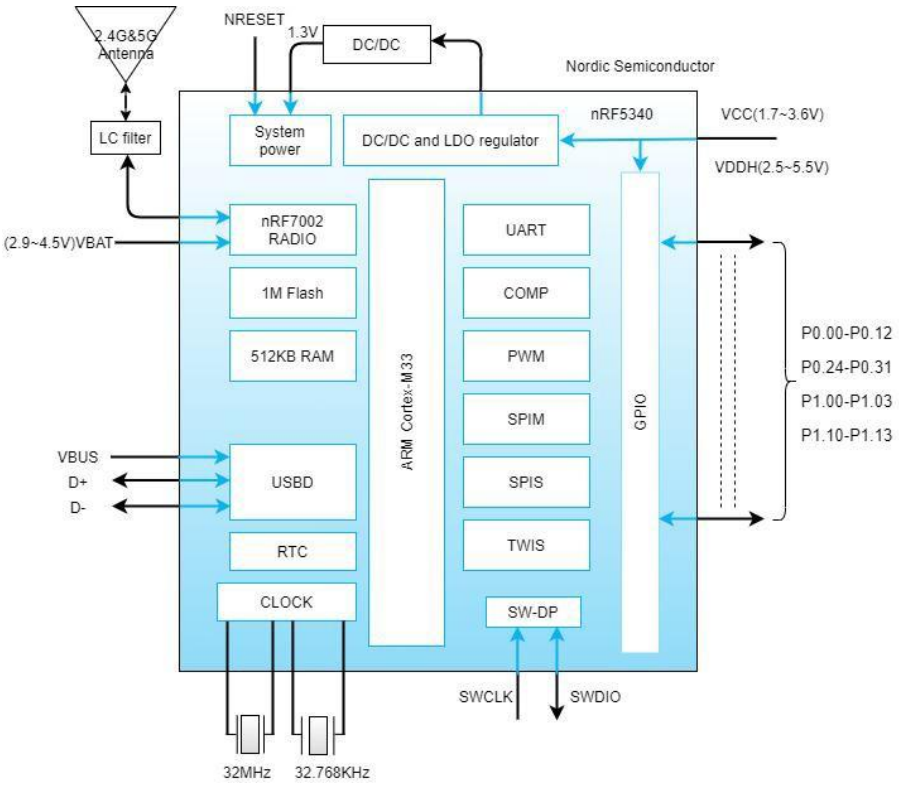

2 Electrical Specification

Parameter	Values	Notes
Operation Voltage	1.7V-5.5V	To ensure RF operation， suggest BLE supply voltage not lower than 3.3V suggest WiFi supply voltage not lower than 3.6V
Working Temperature	-40℃~+85℃	
Transmission Power	BLE:-40 ~ +3dBm WiFi: +5 ~+21dBm	Configurable
Current(RX)	2.4G-56mA/5G-58mA	
Current(TX)	2.4G-191mA/5G-260mA	BLE 2Mbps transmission
Module Dimension	27×23.5×2.4mm	
Quantity of IO Port	29	General purpose IO interface

Web：www.minewsemi.com Tel：0755-2801 0353 E-mail：minewsemi@minew.com
Copyright© Shenzhen Minewsemi Co., Ltd.

3 Pin Description

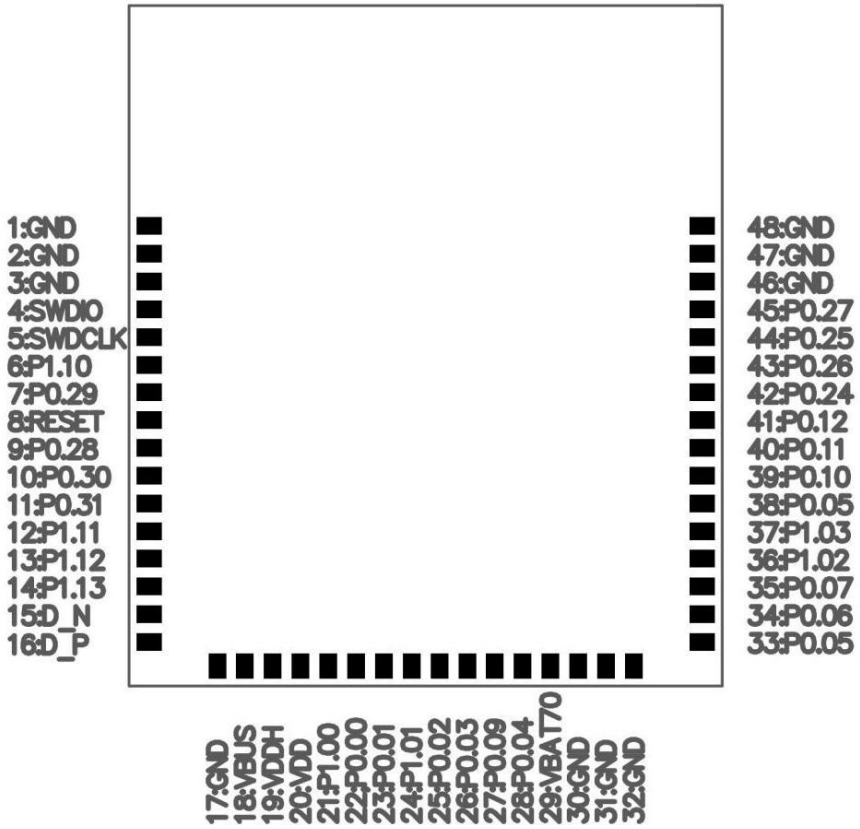

(Top View)

Web：www.minewsemi.com Tel：0755-2801 0353 E-mail：minewsemi@minew.com

Copyright© Shenzhen Minewsemi Co., Ltd.

4 Pin Definition

Symbol	Type	Definition
VDD	Power positive pole	Supply electricity: 1.7V~3.6V
VDDH	GPIO	Supply electricity: 2.5V~5.5V
VBUS	Power source	USB interface acquired power input after conversion
VBAT70	Power source	WiFi power supply, 2.9V~4.5V, 3.6V standard
GND	Negative power supply	Grounded
SWDCLK/SWDIO	I/O, SWCLK/SWDIO	For burning firmware
P0.00-P0.12 P0.24-P0.31 P1.00-P1.03 P1.10-P1.13	GPIOs	General purpose IO interface
D_P	USB port	USB D+
D_N	USB port	USB D-
RESET	Reset	Pull up the resistor internally to reset

Web：www.minewsemi.com Tel：0755-2801 0353 E-mail：minewsemi@minew.com
Copyright© Shenzhen Minewsemi Co., Ltd.

5 Mechanical Drawing

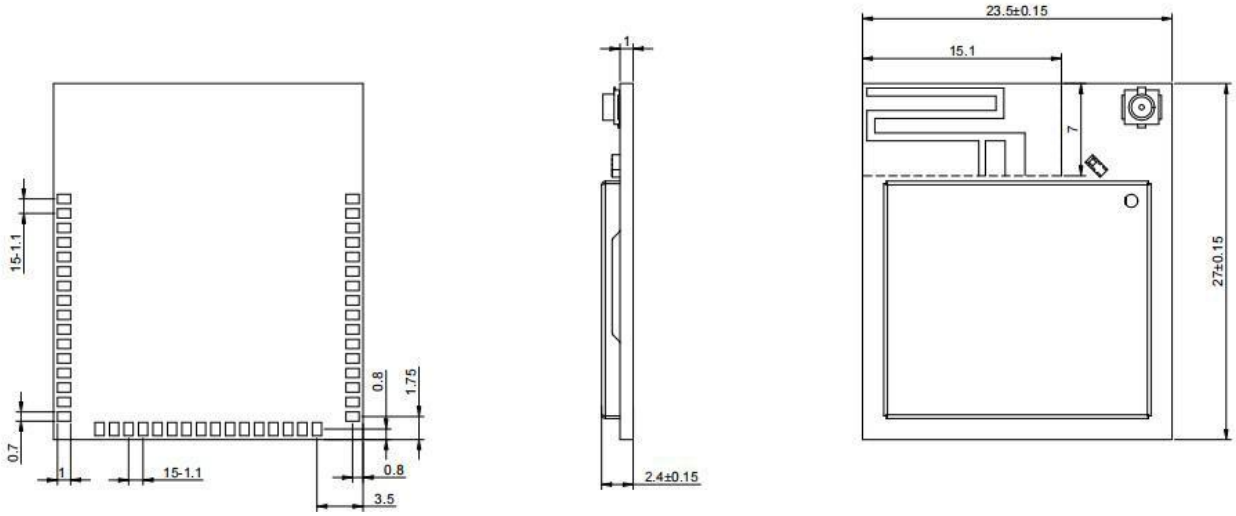

*（Default unit： mm Default tolerance： ±0.1）

Notice ： The recommended pad size suggest 2.54*0.65mm， Pad interval 1mm

6 Power supply module

6.1 Power supply

BLE Chip operation voltage range is 2.7V to 3.6V, to ensure normal use, supply voltage range should be 3.0V to 3.6V as far as possible.
WiFi Chip operation voltage range is 2.9V to 4.5V, to ensure normal use, supply voltage range should be 3.3V to 4.5V as far as possible.

Web： www.minewsemi.com Tel： 0755-2801 0353 E-mail： minewsemi@minew.com
Copyright© Shenzhen Minewsemi Co., Ltd.

7 Electrical Schematic

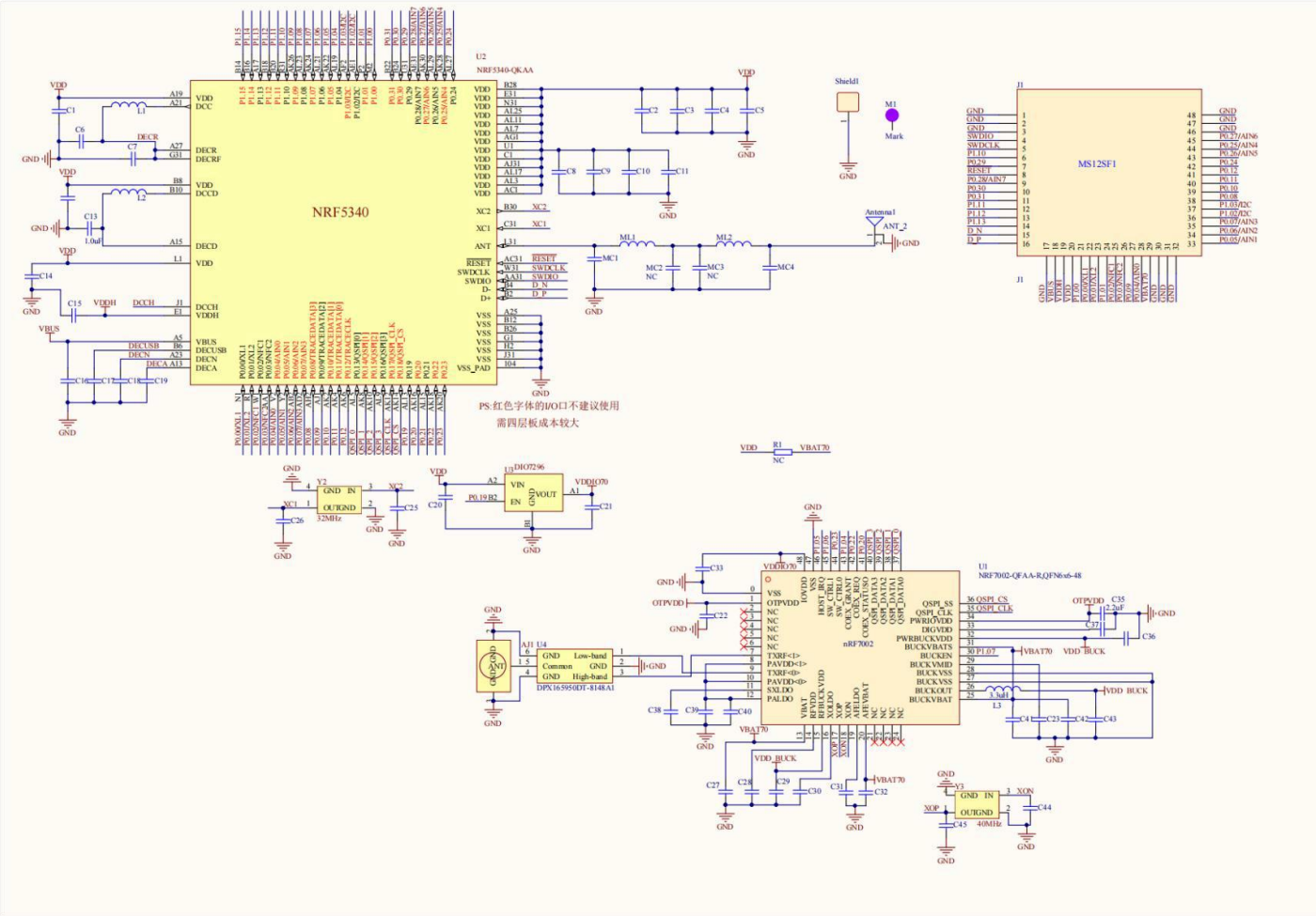

Notice： Before placing an order, please confirm the specific configuration required with the salesperson.

Web：www.minewsemi.com Tel：0755-2801 0353 E-mail：minewsemi@minew.com

Copyright© Shenzhen Minewsemi Co., Ltd.

8 PCB Layout

Module antenna area couldn't have GND plane or metal cross line, couldn't place components nearby. It is better to make hollow out or clearance treatment or place it on the edge of PCB board.

Notice: Refer to examples as below, and highly suggest to use the first design and the adjustment of modules antenna design according to the first wiring.

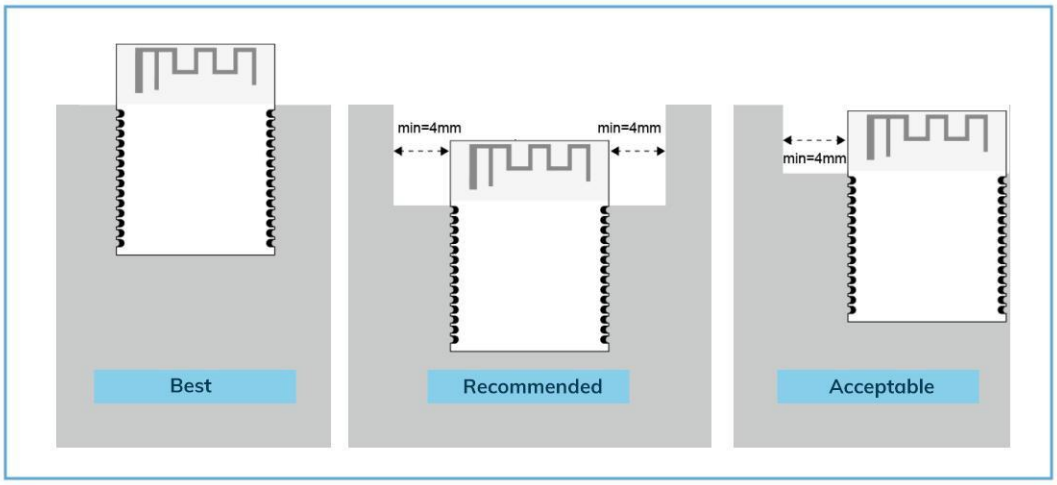

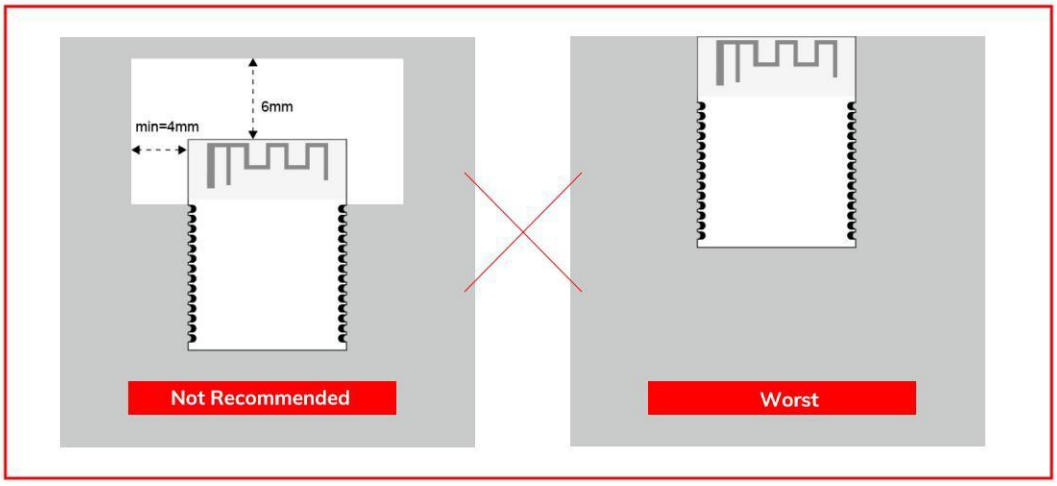

Web: www.minewsemi.com Tel: 0755-2801 0353 E-mail: minewsemi@minew.com

Copyright© Shenzhen Minewsemi Co., Ltd.

Layout notes：

1) Preferred Module antenna area completely clearance and not be prevented by metals, otherwise it will influence antenna's effect (as above DWG. indication).
2) Cover the external part of module antenna area with copper as far as possible to reduce the main board's signal cable and other disturbing.
3) It is preferred to have a clearance area of 4 square meter or more area around the module antenna (including the shell) to reduce the influence to antenna.
4) Device should be grounded well to reduce the parasitic inductance.
5) Do not cover copper under module's antenna in order to avoid affect signal radiation or lead to transmission distance affected.
6) Antenna should keep far from other circuits to prevent radiation efficiency reduction or affects the normal operation of other lines.
7) Module should be placed on edge of circuit board and keep a distance away from other circuits.
8) Suggesting to use magnetic beads to insulate module's access power supply.

Web：www.minewsemi.com Tel：0755-2801 0353 E-mail：minewsemi@minew.com
Copyright© Shenzhen Minewsemi Co., Ltd.

9 Certification

9.1 CE Certification

MS12SF1 module is being tested and is expected to be compliant against the EU-Radio Equipment standards. OEM integrator should consult with qualified test house to verify all regulatory requirements have been met for their complete device.

9.2 FCC Certification

Integration instructions for host product manufacturers according to KDB 996369 D03 OEM Manual v01r01

2.2 List of applicable FCC rules
The MS12SF1 is an WiFi Module. It is within U.S. FCC part 15.247,15.407 standard

2.3 Specific operational use conditions The
EUT is a WiFi6+BLE Combo Module
Operation Frequency: 2402-2480MHz for BLE; 2412-2472MHz for WIFI 2.4G,5180-5240/5745-5825MHz for WIFI 5G
Modulation Type: GFSK for BLE,WLAN(DSSS/OFDM)
Antenna Designation: BLE: PCB Antenna, WIFI 2.4G/5G: External rod antenna
Antenna Gain: BLE:2.7dBi, WIFI (2.4G):4.01dBi, WIFI 5.2G:5.78 dBi, WIFI 5.8G:2.24 dBi

2.4 Limited module procedures
not applicable; Single Modular Approval Request

2.5 Trace antenna designs
Not applicable;

2.6 RF exposure considerations
To maintain compliance with FCC's RF Exposure guidelines, This equipment should be installed and operated with minimum distance between 20cm the radiator your body: Use only the supplied antenna.

2.7 Antennas
The MS12SF1 is an WiFi Module beams signals and communicates with its antenna, which is External Antenna . Antenna Designation: BLE: PCB Antenna, WIFI 2.4G/5G: External rod antenna, Antenna Gain: BLE:2.7dBi, WIFI (2.4G):4.01dBi, WIFI 5.2G:5.78 dBi, WIFI 5.8G:2.24 dBi. Antenna could not be in no- load state when module is working. During debugging, it is suggested to add 50 ohms load to the antenna port to avoid damage or performance degradation of the module under long-time no-load condition.

2.8 Label and compliance information

Web: www.minewsemi.com Tel: 0755-2801 0353 E-mail: minewsemi@minew.com
Copyright© Shenzhen Minewsemi Co., Ltd.

The final end product must be label in a visible area , the Host must Contains FCC ID: 2BDJ6-MS12SF1 .

2.9 Information on test modes and additional testing requirements

Data transfer module demo board can control the EUT work in RF test mode at specified test channel.

2.10 Additional testing, Part 15 Subpart B disclaimer

The module without unintentional-radiator digital circuit, so the module does not required an evaluation by FCC Part 15 Subpart B. The host should be evaluated by the FCC Subpart B

2.11 OEM integration instructions:

This device is intended only for OEM integrators under the following conditions: The transmitter module may not be co-located with any other transmitter or antenna. The module shall be only used with the external antenna(s) that has been originally tested and certified with this module. As long as the conditions above are met, further transmitter test will not be required. However, the OEM integrator is still responsible for testing their end-product for any additional compliance requirements required with this module installed (for example, digital device emissions, PC peripheral requirements, etc.).

2.12 Validity of using the module certification:

In the event that these conditions cannot be met (for example certain laptop configurations or co-location with another transmitter), then the FCC authorization for this module in combination with the host equipment is no longer considered valid and the FCC ID of the module cannot be used on the final product. In these circumstances, the OEM integrator will be responsible for re-evaluating the end product (including the transmitter) and obtaining a separate FCC authorization.

ATTENTION

This device is intended only for OEM integrators under the following conditions:

1) The antenna must be installed such that 5 mm is maintained between the antenna and users, and

2) This device and its antenna(s) must not be co-located with any other transmitters except in accordance with FCC multi-transmitter product procedures. Referring to the multi-transmitter policy, multiple transmitter(s) and module(s) can be operated simultaneously without C2PC.

3) For all products market in US, OEM has to limit the Operating Frequency: 2402-2480MHz,5180MHz-5240MHz,5745MHz-5825MHz by supplied firmware programming tool. OEM shall not supply any tool or info to the end - user regarding to Regulatory Domain change.

USERS MANUAL OF THE END PRODUCT:

In the user manual of the end product, the end user has to be informed to keep at least 5mm separation with the antenna while this end product is installed and

Web：www.minewsemi.com Tel：0755-2801 0353 E-mail：minewsemi@minew.com

Copyright© Shenzhen Minewsemi Co., Ltd.

operated. The end user has to be informed that the FCC radio-frequency exposure guidelines for an uncontrolled environment can be satisfied. The end user has to also be informed that any
changes or modifications not expressly approved by the manufacturer could void the user's authority to operate this equipment.

FCC Caution:
Any changes or modifications not expressly approved by the party responsible for compliance could void the user's authority to operate this equipment.

This device complies with part 15 of the FCC Rules. Operation is subject to the following two conditions:
(1) this device may not cause harmful interference, and
(2) this device must accept any interference received, including interference that may cause undesired operation.
This device and its antenna(s) must not be co-located or operating in conjunction with any other antenna or transmitter.

NOTE: This equipment has been tested and found to comply with the limits for a Class B digital device, pursuant to Part 15 of the FCC Rules. These limits are designed to provide reasonable protection against harmful interference in a residential installation. This equipment generates, uses and can radiate radio frequency energy and, if not installed and used in accordance with the instructions, may cause harmful interference to radio communications. However, there is no guarantee that interference will not occur in a particular installation.
If this equipment does cause harmful interference to radio or television reception, which can be determined by turning the equipment off and on, the user is encouraged to try to correct the interference by one or more of the following measures:
-- Reorient or relocate the receiving antenna.
-- Increase the separation between the equipment and receiver.
-- Connect the equipment into an outlet on a circuit different from that to which the receiver is connected.
-- Consult the dealer or an experienced radio/TV technician for help.

The device for operation in the band 5150-5250 MHz is only for indoor use to reduce the potential for harmful interference to co-channel mobile satellite systems

Copyright© Shenzhen Minewsemi Co., Ltd.

10 Reflow and Soldering

1) Do SMT according to above reflow oven temperature deal curve. Max. Temperature is 260℃;

   Refer to IPC/JEDEC standard; Peak TEMP<260℃; Times: ≤2 times, suggest only do once reflow soldering on module surface in case of SMT double pad involved. Contact us if special crafts involved.

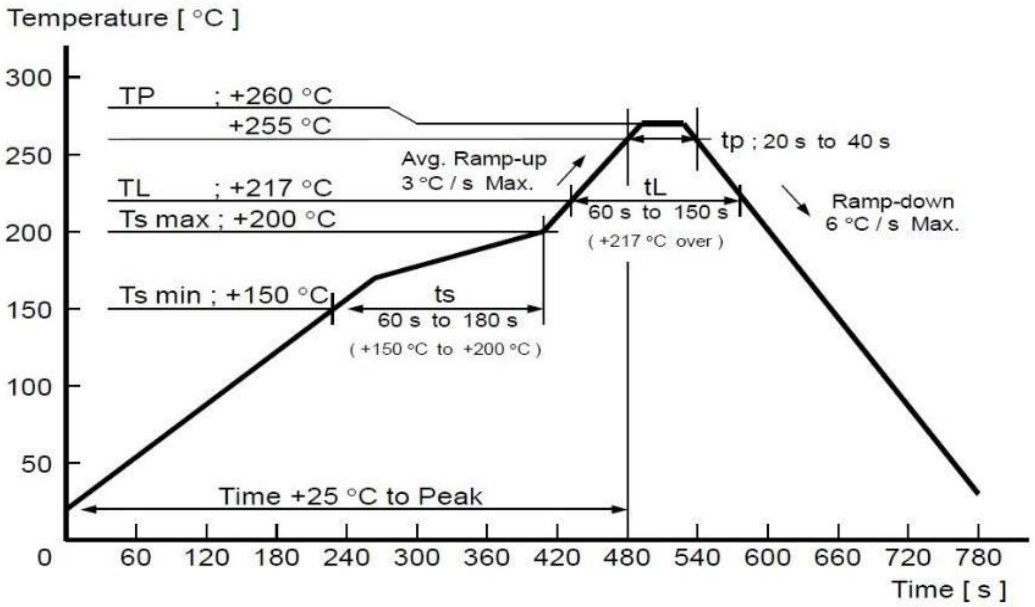

2) Suggesting to make 0.2mm thickness of module SMT for partial ladder steel mesh, then make the opening extend 0.8mm

3) After unsealing, it cannot be used up at one time, should be vacuumed for storage, couldn't be exposed in the air for long time. Please avoid getting damp and soldering-pan oxidizing. If there are 7 to 30 days interval before using online SMT, suggest to bake at 65-70 ℃ for 24 hours without disassembling the tape.

4) Before using SMT, please adopt ESD protection measure.

Web: www.minewsemi.com Tel: 0755-2801 0353 E-mail: minewsemi@minew.com
Copyright© Shenzhen Minewsemi Co., Ltd.

11 Package Information

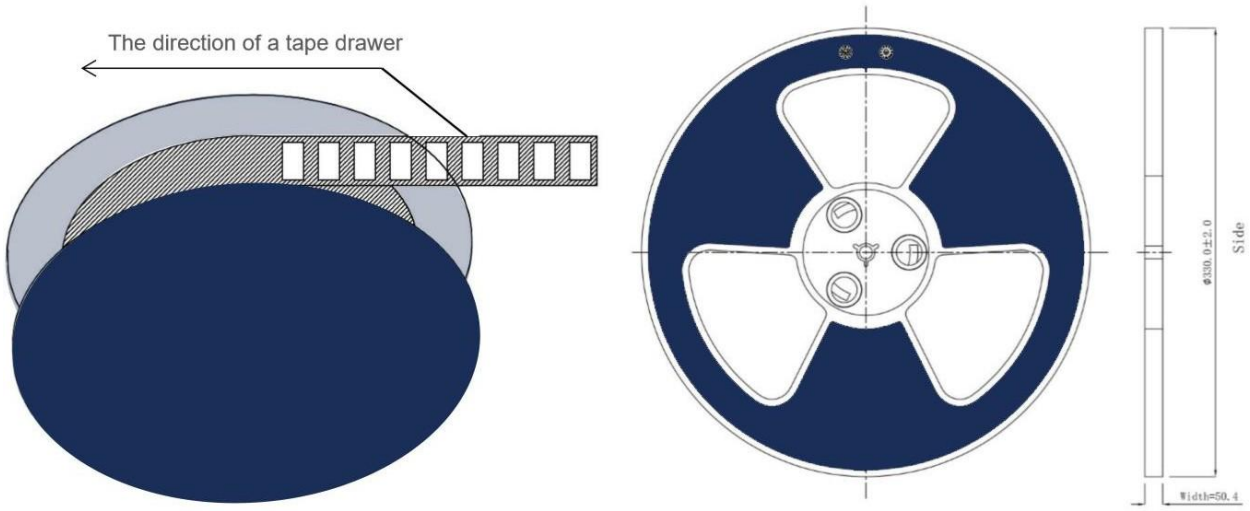

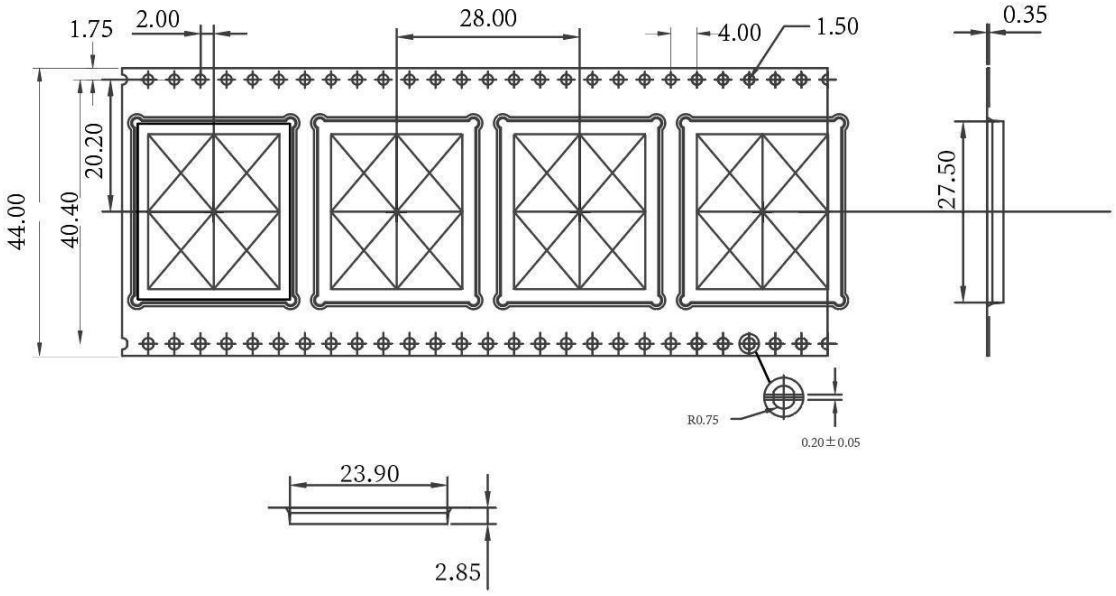

*（Default unit： mm Default tolerance： ±0.1）

Packing detail	Specification	Net weight	Gross weight	Dimension
Quantity	700PCS	1820g	2350g	W=44mm ，T=0.35mm

*** Note:** Default weight tolerance all are within 10g（except the special notes)

Web： www.minewsemi.com Tel： 0755-2801 0353 E-mail： minewsemi@minew.com
Copyright© Shenzhen Minewsemi Co., Ltd.

Quality

Cognizant of our commitment to quality, we operate our own factory equipped with state-of-the-art production facilities and a meticulous quality management system. We hold certifications for ISO9001, ISO14001, ISO27001, OHSA18001, BSCI.

Every product undergoes stringent testing, including transmit power, sensitivity, power consumption, stability, and aging tests. Our fully automated module production line is now in full operation, boasting a production capacity in the millions, capable of meeting high-volume production demands.

Contact Us

Shenzhen Minewsemi Co., Ltd. is committed to swiftly delivering top-quality connectivity modules to our customers. For assistance and support, please feel free to contact our relevant personnel, or contact us as follows:

Web: www.minewsemi.com

Email: minewsemi@minew.com **Linkedin:** www.linkedin.com/company/minewsemi

Shop : https://minewsemi.en.alibaba.com/ **Tel:** +86 0755-28010353

Address: 3rd Floor,I Building, Gangzhilong Science Park, NO.6, Qinglong Road,Longhua District, Shenzhen, China

Click the icon to view and download the latest product documents electronically.

Copyright© Shenzhen Minewsemi Co., Ltd.

Copyright Statement

This manual and all the contents contained in it are owned by Shenzhen Minewsemi Co., Ltd. and are protected by Chinese laws and applicable international conventions related to copyright laws.

The certified trademarks included in this product and related documents have been licensed for use by MinewSemi. This includes but is not limited to certifications such as BQB, RoHS, REACH, CE, FCC, BQB, IC, SRRC, TELEC, WPC, RCM, WEEE, etc. The respective textual trademarks and logos belong to their respective owners. For example, the Bluetooth® textual trademark and logo are owned by Bluetooth SIG, Inc. Other trademarks and trade names are those of their respective owners. Due to the small size of the module product, the "®" symbol is omitted from the Bluetooth Primary Trademarks information in compliance with regulations.

The company has the right to change the content of this manual according to the technological development, and the revised version will not be notified otherwise. Without the written permission and authorization of the company, any individual, company, or organization shall not modify the contents of this manual or use part or all of the contents of this manual in other ways. Violators will be held accountable in accordance with the law.

MINEWSEMI

Tel: 0086-755-2801 0353
Email: minewsemi@minew.com
Web: www.minewsemi.com
Address: 3rd Floor, Building I, Gangzhilong Science Park, Qinglong RoadLonghua District, Shenzhen 518109, China

Copyright© Shenzhen Minewsemi Co., Ltd.