MINEWSEMI

WiFi Module

MS15SF1

DataSheet

V 1.0.0

Applicable Product Model
MS15SF11

Copyright© Shenzhen Minewsemi Co., Ltd.

Version Note

Version	Details	Contributor(s)	Date	Notes
1.0.0	First edit	Vincle	2023.10.23	

Web：www.minewsemi.com Tel：0755-2801 0353 E-mail：minewsemi@minew.com
Copyright© Shenzhen Minewsemi Co., Ltd.

MS15SF1-ESP32C6

Multi-protocol,cost-effective,low-power,WiFi 6+ BLE5.3 Multi-protocol module with full development resource support

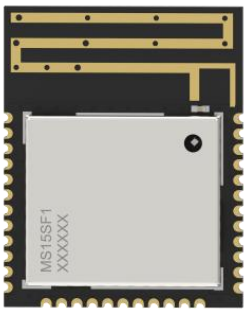

MS15SF1 is a multi-protocol, high-performance, cost-effective wireless WiFi 6+BLE5.3 combo module based on ESP32-C6 SoC. The RISC-V single-core runs at a frequency of 160 MHz, with 320 KB+4MB FLASH program space, 512KB+16KB RAM, integrated 2.4 GHz transceiver, LNA, and other powerful resources for 2.4GHz WiFi/BLE connections. It is compatible with the MS11SF11 module and can withstand voltages of up to 80M in actual high-interference conditions. MS15SF1 is compatible with the MS11SF11 module.

Features

- 2.4G WiFi6 (802.11b/g/n ax) + BLE5.3
- AP、STA、AP+STA Mode
- Support for AT, ESP-IDF developmentupport
- IEEE 802.15.4-2015 protocol compatible
- Support SDIO, I2S, UART and other interfaces.
- Support for OTA encryption upgrade

Application

Smart Buildings

Consumer Electronics

Smart Healthcare

Security Equipment

Automotive Devices

Service Robot

POS

Key parameter

Chip Model	ESP32-C6FH4	**Antenna**	PCB
Module size	16.6x13.2x2.2mm	**GPIO**	22
Flash	4M + 320KB	**RAM**	512KB+16KB
Receiving Sensitivity	BLE：-106dBm WiFi：-99.2dBm	**Transmission Power**	BLE：-34 ~ +21dBm WiFi：-24 ~ + 20dBm
Current(TX)	382mA	**Current(RX)**	82mA

Web：www.minewsemi.com Tel：0755-2801 0353 E-mail：minewsemi@minew.com

Copyright© Shenzhen Minewsemi Co., Ltd.

INDEX

1 Electrical Specification 5

2 Pin Description 6

3 Pin Definition 7

4 Power Consumption Description 7

4.1 Description 7

4.2 Power management 8

5 Mechanical Drawing 9

6 PCB Layout 10

7 Reflow and Soldering 12

8 Package Information 13

2.8 Label and compliance information 17

2.9 Information on test modes and additional testing requirements5 17

Quality 18

Contact Us 18

Copyright Statement 19

Copyright© Shenzhen Minewsemi Co., Ltd.

1 Electrical Specification

Parameter	Values	Notes
Working Voltage	3.0V-3.6V	To ensure RF work, supply voltage suggest not lower than 3.3V
Working Temperature	-40℃~+105℃	Storage temperature is -40℃~+125℃
Transmission Power	BLE：-34 ~ +21dBm WiFi：-24 ~ +20 dBm	Configurable
Current(RX)	82mA	RF Receive Current in Maximum Power Mode
Current(TX)	382mA	RF Receive Current in Maximum Power Mode
Module Dimension	16.6x13.2x2.2mm	
Quantity of IO Port	22	

Web：www.minewsemi.com Tel：0755-2801 0353 E-mail：minewsemi@minew.com
Copyright© Shenzhen Minewsemi Co., Ltd.

2 Pin Description

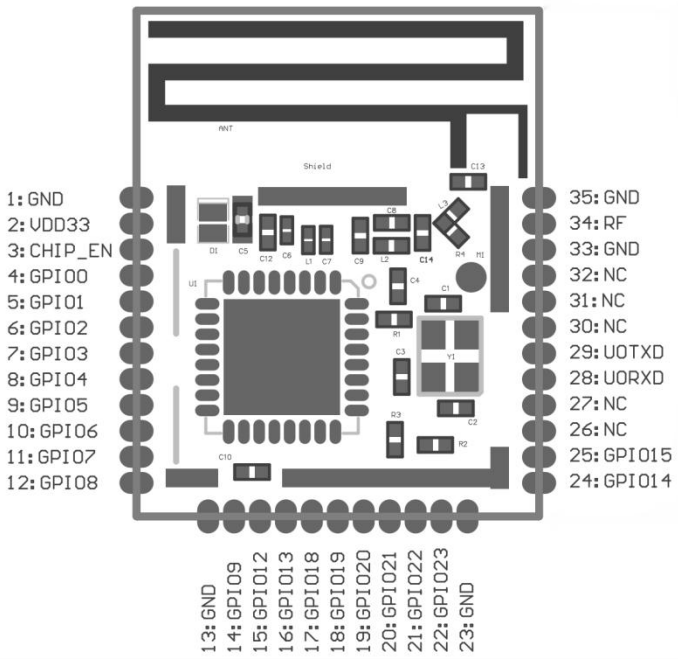

(Top View)

Web：www.minewsemi.com Tel：0755-2801 0353 E-mail：minewsemi@minew.com

Copyright© Shenzhen Minewsemi Co., Ltd.

3 Pin Definition

Symbol	Type	Definition
GND	Ground	Ground
VDD	Negativ power supply	Power supply：3.0 ~ 3.6V, with this pin
CHIP_EN	Enable	High: chip enable; Low: chip disable; Note: the EN pin should NC.
RF	-	External antenna pin
GPIO1 - GPIO9 GPIO12 - GPIO15 GPIO18 - GPIO23	GPIO	General IO port, GPIO4 - Serial port RXD. GPIO5 - serial port TXD.
U0TXD	I/O, TX	I/O pin firmware download UART TX
U0RXD	I/O, RX	I/O pin firmware download UART RX
NC	-	Not connected pin

4 Power Consumption Description

4.1 Description

The following power consumption figures are based on 3.3 V power supply, 25℃ ambient temperature, and test results done at the RF interface.

Web：www.minewsemi.com Tel：0755-2801 0353 E-mail：minewsemi@minew.com
Copyright© Shenzhen Minewsemi Co., Ltd.

Operating mode		Working status	Peak
RF work	TX	802.11b, 1 Mbps, DSSS @ 20.5 dBm	382mA
		802.11g, 54 Mbps, OFDM @ 19.0 dBm	316mA
		802.11n, HT20, MCS7 @ 18.0 dBm	295mA
		802.11n, HT40, MCS7 @ 17.5 dBm	280mA
		802.11ax, MCS9 @ 15.5 dBm	251mA
	RX	802.11b/g/n, HT20	78mA
		802.11n, HT40	82mA
		802.11ax, HE20	78mA

4.2 Power management

Operating mode	Working status	Type value
Modem-sleep (Support by default)	80MHZ, CPU working, peripheral clock fully on	30mA
	80MHZ, CPU idle, peripheral clock fully on	25mA
Light-sleep	CPU, wireless communication module power off, peripheral clock off, all GPIOs set to high impedance state.	180μA
	CPU, wireless communication module, peripheral power off, all GPIOs set to high state.	35μA
Deep-sleep	RTC Timer and LP Memory Power Up	7μA
Power off (Support by default)	The CHIP_PU pin is pulled low and the chip is turned off.	1μA

Web：www.minewsemi.com Tel：0755-2801 0353 E-mail：minewsemi@minew.com
Copyright© Shenzhen Minewsemi Co., Ltd.

5 Mechanical Drawing

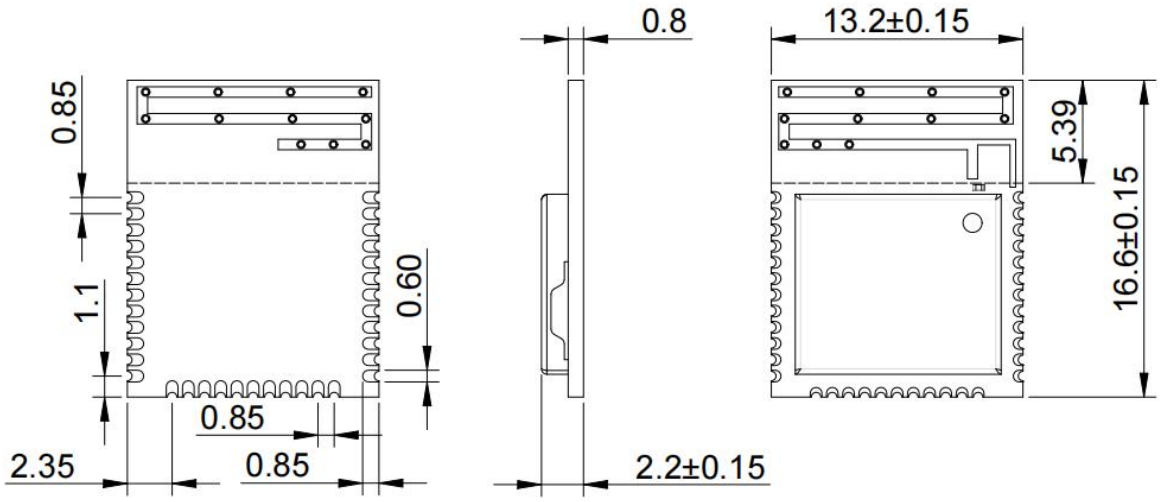

*（Default unit：mm　　Default tolerance：±0.1）

Web：www.minewsemi.com　　Tel：0755-2801 0353　　E-mail：minewsemi@minew.com

Copyright© Shenzhen Minewsemi Co., Ltd.

6 PCB Layout

Module antenna area couldn't have GND plane or metal cross line, couldn't place components nearby. It is better to make hollow out or clearance treatment or place it on the edge of PCB board.

Notice: Refer to examples as below, and highly suggest to use the first design and the adjustment of modules antenna design according to the first wiring.

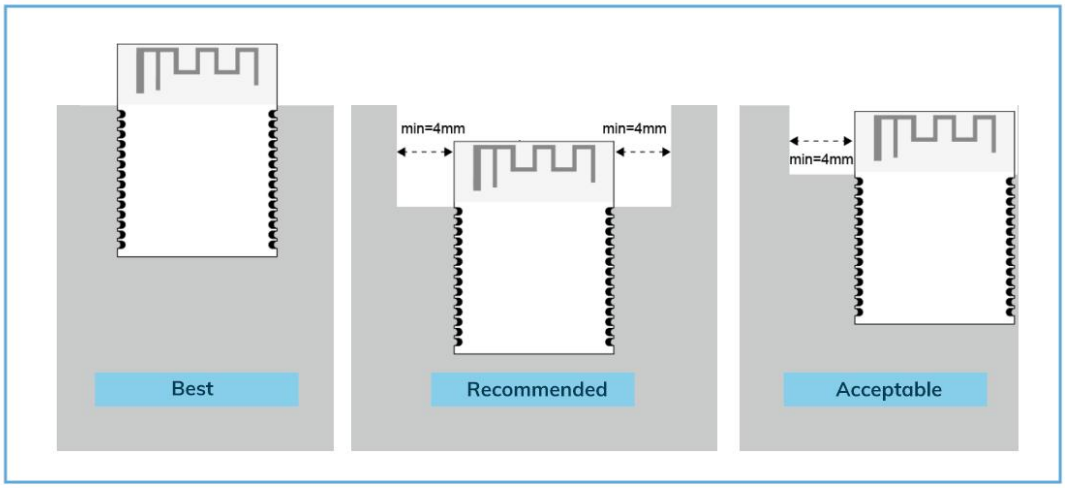

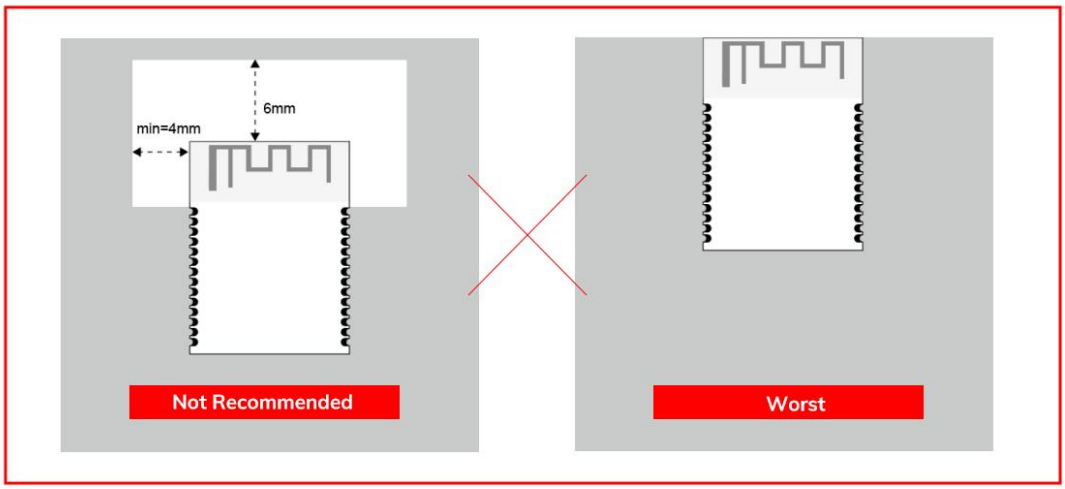

Web：www.minewsemi.com Tel：0755-2801 0353 E-mail：minewsemi@minew.com
Copyright© Shenzhen Minewsemi Co., Ltd.

Layout notes：

1) Preferred Module antenna area completely clearance and not be prevented by metals, otherwise it will influence antenna's effect (as above DWG. indication).
2) Cover the external part of module antenna area with copper as far as possible to reduce the main board's signal cable and other disturbing.
3) It is preferred to have a clearance area of 4 square meter or more area around the module antenna (including the shell) to reduce the influence to antenna.
4) Device should be grounded well to reduce the parasitic inductance.
5) Do not cover copper under module's antenna in order to avoid affect signal radiation or lead to transmission distance affected.
6) Antenna should keep far from other circuits to prevent radiation efficiency reduction or affects the normal operation of other lines.
7) Module should be placed on edge of circuit board and keep a distance away from other circuits.
8) Suggesting to use magnetic beads to insulate module's access power supply.

Web：www.minewsemi.com Tel：0755-2801 0353 E-mail：minewsemi@minew.com
Copyright© Shenzhen Minewsemi Co., Ltd.

7 Reflow and Soldering

1) Do SMT according to above reflow oven temperature deal curve. Max. Temperature is 260℃;

   Refer to IPC/JEDEC standard；Peak TEMP<260℃；Times：≤2 times，suggest only do once reflow soldering on module surface in case of SMT double pad involved. Contact us if special crafts involved.

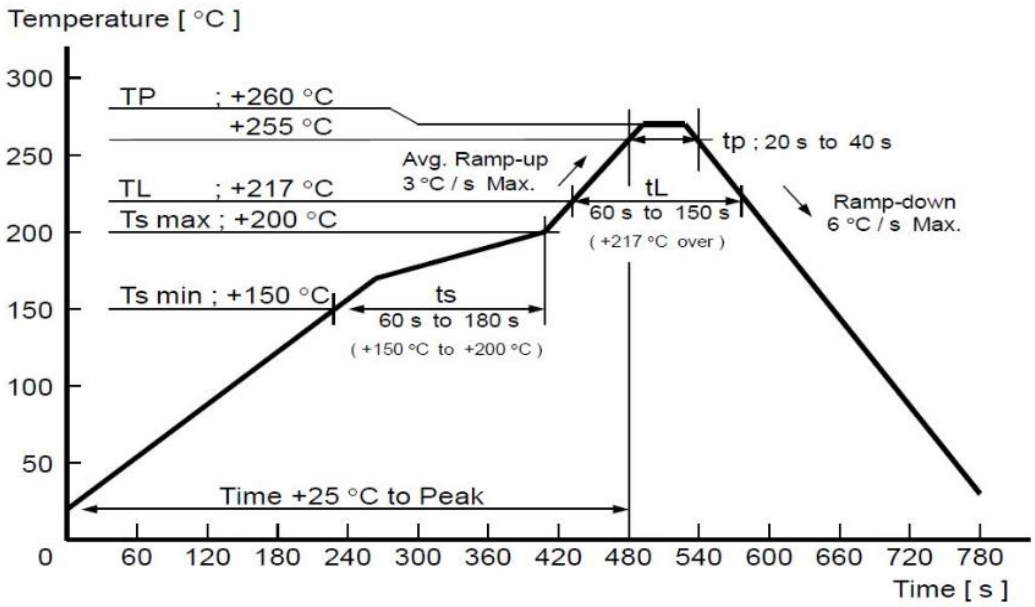

2) Suggesting to make 0.2mm thickness of module SMT for partial ladder steel mesh, then make the opening extend 0.8mm

3) After unsealing, it cannot be used up at one time, should be vacuumed for storage, couldn't be exposed in the air for long time. Please avoid getting damp and soldering-pan oxidizing. If there are 7 to 30 days interval before using online SMT, suggest to bake at 65-70 ℃ for 24 hours without disassembling the tape.

4) Before using SMT, please adopt ESD protection measure.

Web：www.minewsemi.com Tel：0755-2801 0353 E-mail：minewsemi@minew.com
Copyright© Shenzhen Minewsemi Co., Ltd.

8 Package Information

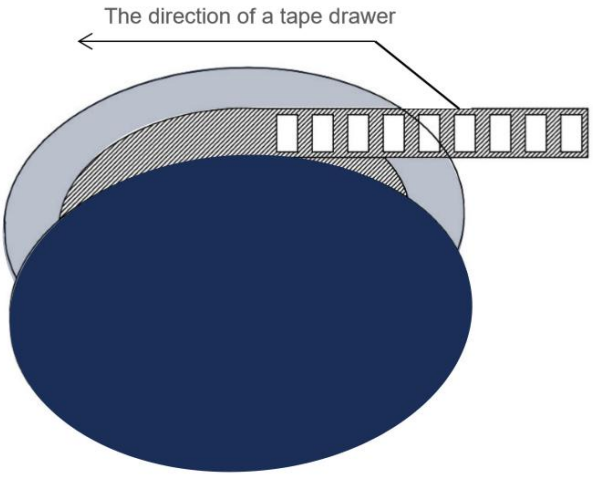

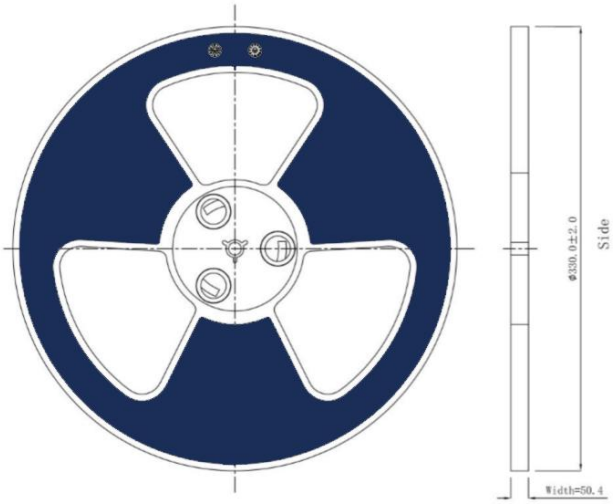

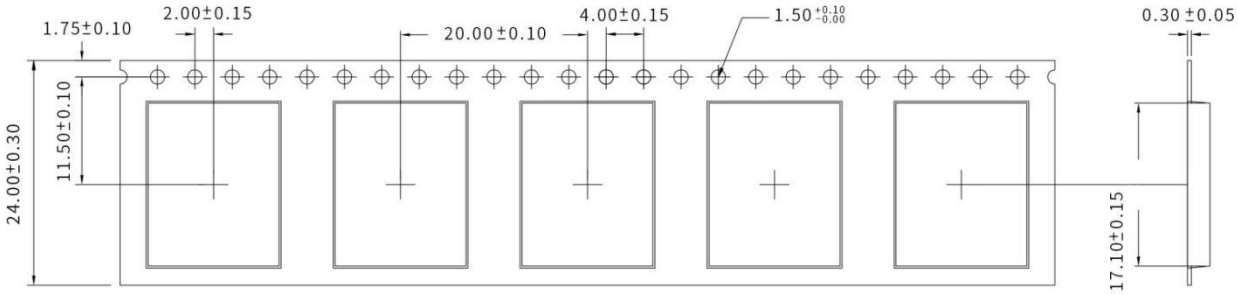

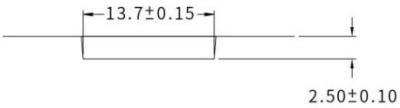

*（Default unit：mm　　Default tolerance：±0.1）

Packing detail	Specification	Net weight	Gross weight	Dimension
Quantity	850PCS	8500g	1118g	W=24mm，T=0.35mm

*** Note:** Default weight tolerance all are within 10g（except the special notes)

Web：www.minewsemi.com　Tel：0755-2801 0353　E-mail：minewsemi@minew.com
Copyright© Shenzhen Minewsemi Co., Ltd.

This device complies with part 15 of the FCC Rules. Operation is subject to the following two conditions: (1) This device may not cause harmful interference, and (2) this device must accept any interference received, including interference that may cause undesired operation.

FCC warning:

Any Changes or modifications not expressly approved by the party responsible for compliance could void the user's authority to operate the equipment.
Note: This equipment has been tested and found to comply with the limits for a Class B digital device, pursuant to part 15 of the FCC Rules. These limits are designed to provide reasonable protection against harmful interference in a residential installation. This equipment generates uses and can radiate radio frequency energy and, if not installed and
used in accordance with the instructions, may cause harmful interference to radio communications. However, there is no guarantee that interference will not occur in a particular installation. If this equipment does cause harmful interference to radio or television reception, which can be determined by turning the equipment off and on, the user is encouraged to try to correct the interference by one or more of the following measures:
-Reorient or relocate the receiving antenna.
-Increase the separation between the equipment and receiver.
-Connect the equipment into an outlet on a circuit different from that to which the receiver is connected.
-Consult the dealer or an experienced radio/TV technician for help.
The device has been evaluated to meet general RF exposure requirement. The device can be used in portable exposure condition without restriction.

Requirement per KDB996369 D03

2.2 List of applicable FCC rules

List the FCC rules that are applicable to the modular transmitter. These are the rules that
specifically establish the bands of operation, the power, spurious emissions, and operating
fundamental frequencies. DO NOT list compliance to unintentional-radiator rules (Part 15
Subpart B) since that is not a condition of a module grant that is extended to a host manufacturer. See also Section 2.10 below concerning the need to notify host manufacturers that further testing is required.3
Explanation: This module meets the requirements of FCC part 15C(15.247).

2.3 Summarize the specific operational use conditions

Describe use conditions that are applicable to the modular transmitter, including for example any

Web：www.minewsemi.com Tel：0755-2801 0353 E-mail：minewsemi@minew.com
Copyright© Shenzhen Minewsemi Co., Ltd.

limits on antennas, etc. For example, if point-to-point antennas are used that require reduction in
power or compensation for cable loss, then this information must be in the instructions. If
the use
condition limitations extend to professional users, then instructions must state that this information
also extends to the host manufacturer's instruction manual. In addition, certain information may also
be needed, such as peak gain per frequency band and minimum gain, specifically for master
devices in
Explanation: The EUT has a PCB Antenna, , and the antenna use a permanently attached
antenna
which is not replaceable.

2.4 Limited module procedures

If a modular transmitter is approved as a "limited module," then the module manufacturer is
responsible for approving the host environment that the limited module is used with. The
manufacturer
of a limited module must describe, both in the filing and in the installation instructions, the alternative means that the limited module manufacturer uses to verify that the host meets the necessary requirements to satisfy the module limiting conditions.
A limited module manufacturer has the flexibility to define its alternative method to address the conditions that limit the initial approval, such as: shielding, minimum signaling amplitude, buffered modulation/data inputs, or power supply regulation. The alternative method could include that the limited module manufacturer reviews detailed test data or host designs prior to giving the host manufacturer approval.
This limited module procedure is also applicable for RF exposure evaluation when it is necessary to demonstrate compliance in a specific host. The module manufacturer must state how control of the product into which the modular transmitter will be installed will be maintained such that full compliance of the product is always ensured.
For additional hosts other than the specific host originally granted with a limited module, a Class II permissive change is required on the module grant to register the additional host as a specific host also approved with the module.
Explanation: The module is not a limited module.

2.5 Trace antenna designs

For a modular transmitter with trace antenna designs, see the guidance in Question 11 of KDB Publication 996369 D02 FAQ – Modules for Micro-Strip Antennas and traces. The integration information shall include for the TCB review the integration instructions

Web：www.minewsemi.com Tel：0755-2801 0353 E-mail：minewsemi@minew.com
Copyright© Shenzhen Minewsemi Co., Ltd.

for the following aspects: layout of trace design, parts list (BOM), antenna, connectors, and isolation requirements.

a) Information that includes permitted variances (e.g., trace boundary limits, thickness, length, width, shape(s), dielectric constant, and impedance as applicable for each type of antenna);

b) Each design shall be considered a different type (e.g., antenna length in multiple(s) of frequency, the wavelength, and antenna shape (traces in phase) can affect antenna gain and must be considered);

c) The parameters shall be provided in a manner permitting host manufacturers to design the printed circuit (PC) board layout;

d) Appropriate parts by manufacturer and specifications;

e) Test procedures for design verification; and

f) Production test procedures for ensuring compliance.

The module grantee shall provide a notice that any deviation(s) from the defined parameters of the antenna trace, as described by the instructions, require that the host product manufacturer must

notify

the module grantee that they wish to change the antenna trace design. In this case, a Class II permissive change application is required to be filed by the grantee, or the host manufacturer can take

responsibility through the change in FCC ID (new application) procedure followed by a Class II permissive change application.

Explanation: Yes, The module with trace antenna designs, and This manual has been shown the layout of trace design,, antenna, connectors, and isolation requirements.

2.6 RF exposure considerations

It is essential for module grantees to clearly and explicitly state the RF exposure conditions that permit a host product manufacturer to use the module. Two types of instructions are required for RF exposure information: (1) to the host product manufacturer, to define the application conditions (mobile,

portable – xx cm from a person's body); and (2) additional text needed for the host product

manufacturer to provide to end users in their end-product manuals. If RF exposure statements and use conditions are not provided, then the host product manufacturer is required to take responsibility of the module through a change in FCC ID (new application).

Explanation: This module complies with FCC RF radiation exposure limits set forth for an

uncontrolled environment, This equipment should be installed and operated with a minimum distance of 20 centimeters between the radiator and your body." This module is designed to comply with the FCC statement, FCC ID is:2BDJ6-MS15SF1.

2.7 Antennas

A list of antennas included in the application for certification must be provided in the

Copyright© Shenzhen Minewsemi Co., Ltd.

instructions.
For modular transmitters approved as limited modules, all applicable professional installer instructions must be included as part of the information to the host product manufacturer. The antenna list shall also identify the antenna types (monopole, PIFA, dipole, etc. (note that for example an “omni-directional antenna” is not considered to be a specific “antenna type”)).
For situations where the host product manufacturer is responsible for an external connector, for example with an RF pin and antenna trace design, the integration instructions shall inform the installer that unique antenna connector must be used on the Part 15 authorized transmitters used in the host product. The module manufacturers shall provide a list of acceptable unique connectors.
Explanation: The EUT has a PCB Antenna, , and the antenna use a permanently attached antenna which is unique.

2.8 Label and compliance information

Grantees are responsible for the continued compliance of their modules to the FCC rules. This includes advising host product manufacturers that they need to provide a physical or e-label stating
“Contains FCC ID” with their finished product. See Guidelines for Labeling and User Information for RF Devices – KDB Publication 784748.
Explanation:The host system using this module, should have label in a visible area indicated the
following texts: "Contains FCC ID: 2BDJ6-MS15SF1

2.9 Information on test modes and additional testing requirements5

Additional guidance for testing host products is given in KDB Publication 996369 D04 Module Integration Guide. Test modes should take into consideration different operational conditions for a stand-alone modular transmitter in a host, as well as for multiple simultaneously transmitting modules or other transmitters in a host product.
The grantee should provide information on how to configure test modes for host product evaluation for different operational conditions for a stand-alone modular transmitter in a host, versus with multiple, simultaneously transmitting modules or other transmitters in a host.
Grantees can increase the utility of their modular transmitters by providing special means, modes, or instructions that simulates or characterizes a connection by enabling a transmitter. This can greatly
simplify a host manufacturer’s determination that a module as installed in a host complies with FCC requirements.
Explanation: Topband can increase the utility of our modular transmitters by providing instructions that simulates or characterizes a connection by enabling a transmitter.

Web：www.minewsemi.com Tel：0755-2801 0353 E-mail：minewsemi@minew.com
Copyright© Shenzhen Minewsemi Co., Ltd.

Quality

Cognizant of our commitment to quality, we operate our own factory equipped with state-of-the-art production facilities and a meticulous quality management system. We hold certifications for ISO9001, ISO14001, ISO27001, OHSA18001, BSCI.

Every product undergoes stringent testing, including transmit power, sensitivity, power consumption, stability, and aging tests. Our fully automated module production line is now in full operation, boasting a production capacity in the millions, capable of meeting high-volume production demands.

Contact Us

Shenzhen Minewsemi Co., Ltd. is committed to swiftly delivering top-quality connectivity modules to our customers. For assistance and support, please feel free to contact our relevant personnel, or contact us as follows:

Web：www.minewsemi.com

Email：minewsemi@minew.com

Linkedin：www.linkedin.com/company/minewsemi

Shop：https://minewsemi.en.alibaba.com/

Tel：+86 0755-28010353

Address：3rd Floor,I Building, Gangzhilong Science Park, NO.6, Qinglong Road,Longhua District, Shenzhen, China

Click the icon to view and download the latest product documents electronically.

Copyright© Shenzhen Minewsemi Co., Ltd.

Copyright Statement

This manual and all the contents contained in it are owned by Shenzhen Minewsemi Co., Ltd. and are protected by Chinese laws and applicable international conventions related to copyright laws.

The certified trademarks included in this product and related documents have been licensed for use by MinewSemi. This includes but is not limited to certifications such as BQB, RoHS, REACH, CE, FCC, BQB, IC, SRRC, TELEC, WPC, RCM, WEEE, etc. The respective textual trademarks and logos belong to their respective owners. For example, the Bluetooth® textual trademark and logo are owned by Bluetooth SIG, Inc. Other trademarks and trade names are those of their respective owners. Due to the small size of the module product, the "®" symbol is omitted from the Bluetooth Primary Trademarks information in compliance with regulations.

The company has the right to change the content of this manual according to the technological development, and the revised version will not be notified otherwise. Without the written permission and authorization of the company, any individual, company, or organization shall not modify the contents of this manual or use part or all of the contents of this manual in other ways. Violators will be held accountable in accordance with the law.

Tel: 0086-755-2801 0353
Email: minewsemi@minew.com
Web: www.minewsemi.com
Address: 3rd Floor, Building I, Gangzhilong Science Park, Qinglong RoadLonghua District, Shenzhen 518109, China

Copyright© Shenzhen Minewsemi Co., Ltd.