MINEWSEMI

LoRa Module

MS21SF1

DateSheet

V 1.1.0

Applicable Product Model
MS21SF1-LLCC68
MS21SF1-SX1262

Copyright© Shenzhen Minewsemi Co., Ltd.

Version Note

Version	Details	Contributor(s)	Date	Notes
1.0.0	First edit	Vincle	2023.08.29	
1.1.0	Addition of modules TX, RX mode control	Vincle	2023.09.29	

Web：www.minewsemi.com Tel：0755-2801 0353 E-mail：minewsemi@minew.com
Copyright© Shenzhen Minewsemi Co., Ltd.

MS21SF1-LLCC68/SX1262

Low-power,ultra-long-range,Small and easy to operate,high-sensitivity

MS21SF1 module is based on Semtech's LoRa wireless half-duplex transceiver chip, LLCC68/SX1262, and supports global ISM frequencies. It is a low-power, ultra-long-range, small and easy-to-use SPI-interfaced LoRa® transceiver module, with a current of only 4.7mA in receive mode, and achieves a high transmission power through the internal integrated high-efficiency power amplifier. Higher reception sensitivity down to -146dBm, compliance with the physical layer requirements of the LoRaWAN® standard specification, and support for LoRa® P2P (points-to-point).Supporting customers in the rapid set-up of their private, long-range LoRa® networks.

Features

- Non-MCU Control, external MCU is required to connect and control through SPI interface
- Programmable bit rates, with bit rates reaching up to 62.5 kbps for both LoRa and FSK modulation
- Transmission Range up to 5KM
- Support SPI interface, can be connected directly to a variety of MCUs Application

Application

Security and early warning equipment
Instrumentation
smart metering
Agricultural sensors
Retail Store Sensor street

Key parameter

Chip Model	LLCC68/SX1262	**Antenna**	IPEX
Module size	16.4x15x3mm	**GPIO**	5
Receiving Sensitivity	-146dBm		
Current(TX)	118mA	**Current(RX)**	4.7mA

Web：www.minewsemi.com Tel：0755-2801 0353 E-mail：minewsemi@minew.com
Copyright© Shenzhen Minewsemi Co., Ltd.

INDEX

1 Block Diagram 5
2 Electrical Specification 5
3 Pin Description 6
4 Pin Definition 7
5 Mechanical Drawing 8
6 Module Connection Description 8
6.1 Connection diagram 8
6.2 Power supply 9
6.3 SPI Interface character 9
6.3.1 DIO with IRQ control 10
6.3.2 Module TX,RX Mode controls 11
Module power consumption description 11
7 Electrical Schematic 12
8 PCB Layout 13
9 Reflow and Soldering 14
10 Package Information 15
Quality 16
Contact Us 16
Copyright Statement 17

Copyright© Shenzhen Minewsemi Co., Ltd.

1 Block Diagram

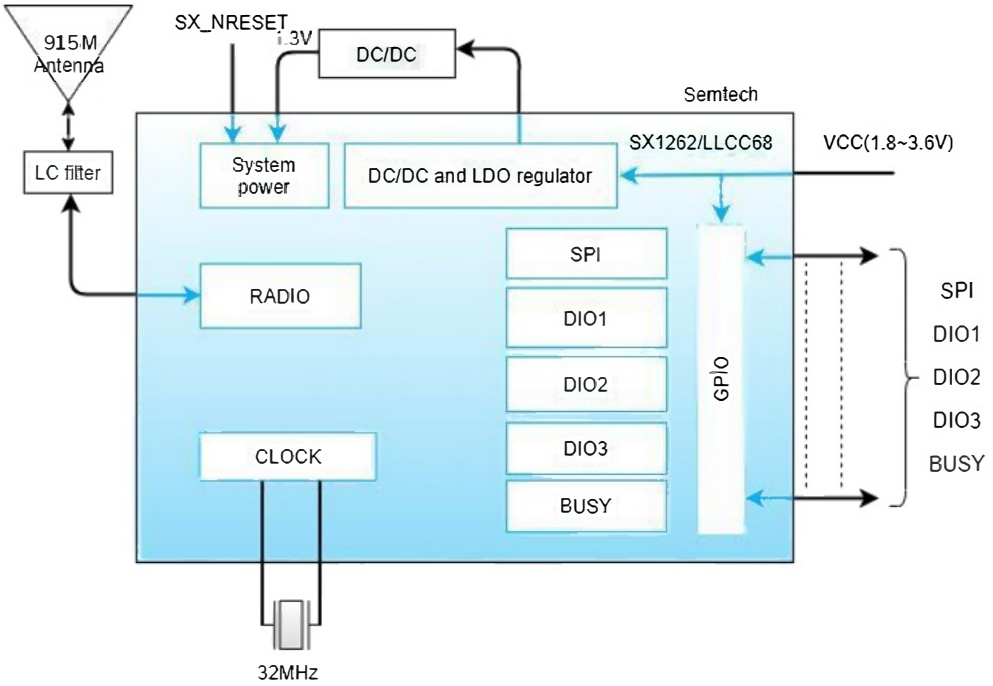

2 Electrical Specification

Parameter	Values	Notes
Operation Voltage	1.7V-3.7V	To ensure RF work, supply voltage suggest not lower than 3.3V
Operation Temperature	-40℃~+85℃	
		Configurable
ISM Frequency	903.2~927.5MHZ	Optional， default 915MHZ
Current(RX)	4.7mA	RX mode
Current(TX)	118mA	TX mode
Module Dimension	16.4x15x3mm	
Quantity of IO Port	5	

Web：www.minewsemi.com Tel：0755-2801 0353 E-mail：minewsemi@minew.com
Copyright© Shenzhen Minewsemi Co., Ltd.

3 Pin Description

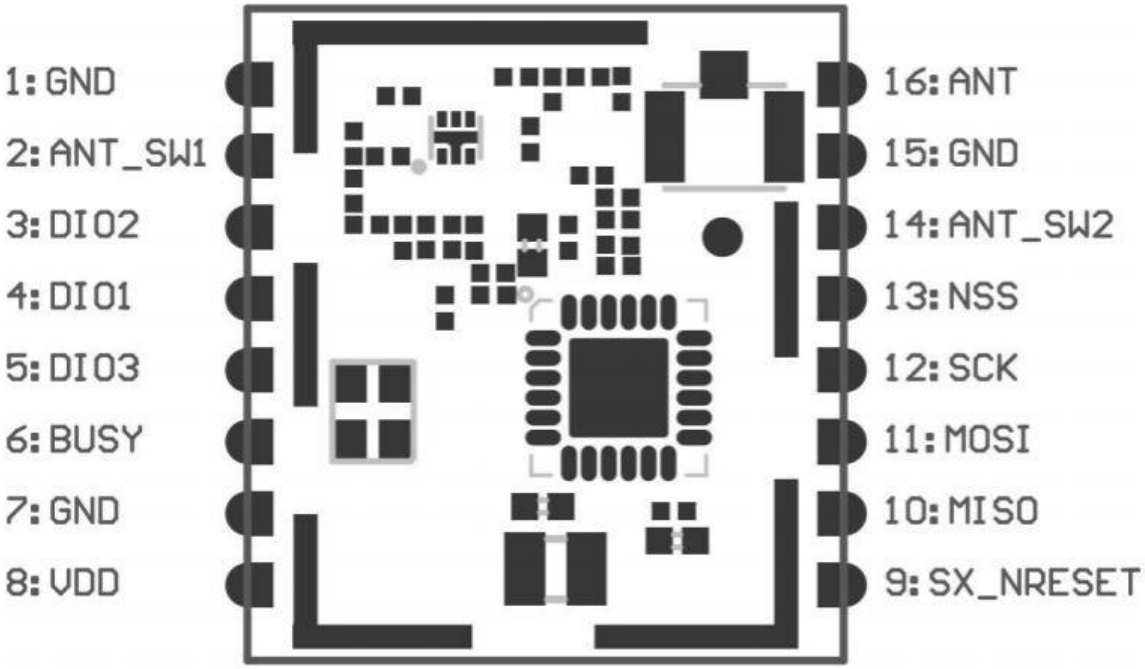

Web：www.minewsemi.com Tel：0755-2801 0353 E-mail：minewsemi@minew.com

Copyright© Shenzhen Minewsemi Co., Ltd.

4 Pin Definition

Number	Symbol	Type	Function description	Notes
1	GND	-	Grounded	
2	ANT_SW1	SWITCH	Antenna switch control	RF TX signal Control Switch，connect the external MCU IO or DIO2, and the high level is valid
3	DIO2	I/O	Multi-purpose digital I/O / RF Switch control	
4	DIO1	I/O	Multi-purpose digital I/O	
5	DIO3	I/O	Multi-purpose digital I/O - external TCXO supply voltage	
6	BUSY	O	Busy instruct	
7	GND	-	Ground	
8	VDD	I	Input voltage for power amplifier regulator	Power supply to voltage 3.3V
9	SX_NRESET	I/O	Reset signal	Active low
10	MISO	O	SPI Slave output	
11	MOSI	I	SPI Slave input	
12	SCK	I	SPI clock	
13	NSS	I	SPI chip select (CS)	
14	ANT_SW2	SWITCH	Antenna switch control	
15	GND	-	Grounded	RF switch receiving control pin, connected to external MCU IO, active at high level
16	ANT	-	Antenna connect pin	

Web：www.minewsemi.com Tel：0755-2801 0353 E-mail：minewsemi@minew.com
Copyright© Shenzhen Minewsemi Co., Ltd.

5 Mechanical Drawing

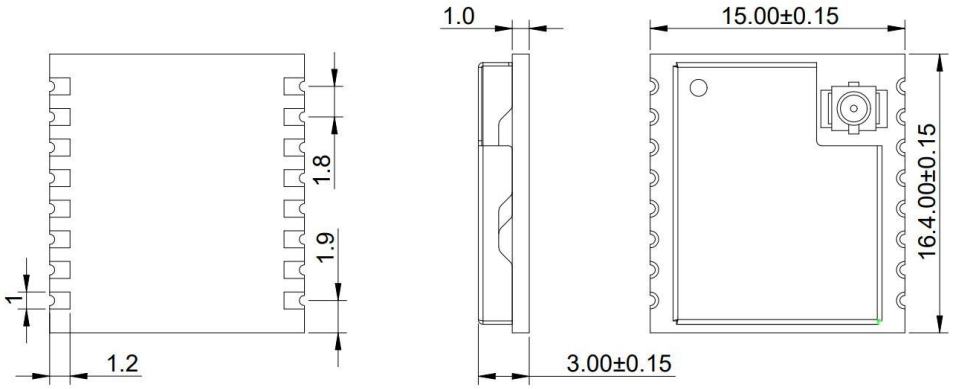

*（Default unit：mm　　Default tolerance：±0.1）

6 Module Connection Description

6.1 Connection diagram

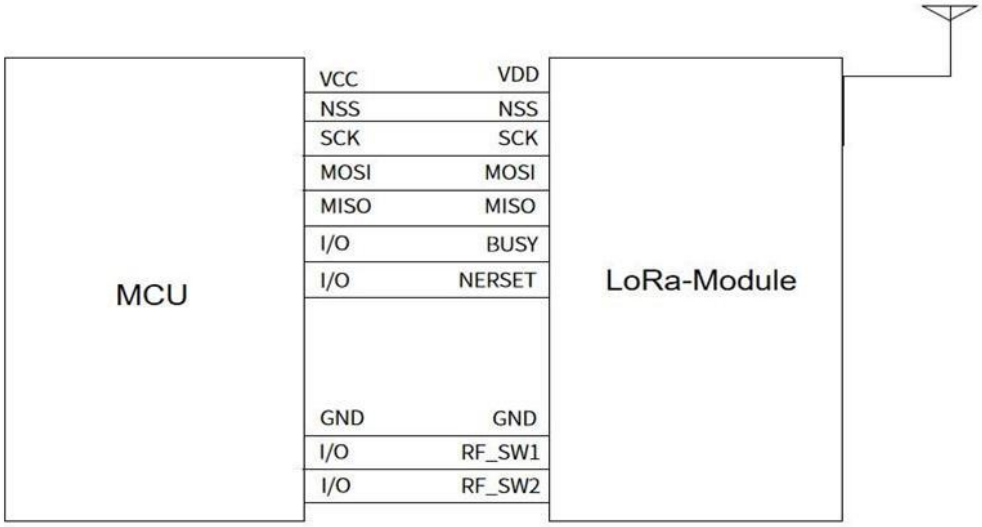

Web：www.minewsemi.com　Tel：0755-2801 0353　E-mail：minewsemi@minew.com
Copyright© Shenzhen Minewsemi Co., Ltd.

6.2 Power supply

The chip-sets operating voltage range is 1.8V-3.6V, to ensure normal use, the power supply voltage shall be 3.3V as far as possible.

6.3 SPI Interface character

The SPI runs on an external SCK clock, allowing it to reach 16MHz.

Transmission is initiated when the NSS pin level goes low. When NSS is high, MISO is in a high impedance state.

SPI Timing Requirements (The chip implements only the Slave side function.)

Symbol	Description	Minimum	Typical	Maximum	unit
t1	NSS falling edge to SCK setup time	32	-	-	ns
t2	SCK period	62.5	-	-	ns
t3	SCK high time	31.25	-	-	ns
t4	MOSI to SCK hold time	5	-	-	ns
t5	MOSI to SCK setup time	5	-	-	ns
t6	MOSI to SCK setup time	0	-	15	ns
t7	SCK falling to MISO delay	0	-	15	ns
t8	SCK to NSS rising edge hold time	31.25	-	-	ns
t9	NSS high time	125	-	-	ns
t10	NSS falling edge to SCK setup time when switching from SLEEP to STDBY_RC mode	100	-	-	s
t11	NSS falling to MISO delay when switching from SLEEP to STDBY_RC mode	0	-	150	s

Web：www.minewsemi.com Tel：0755-2801 0353 E-mail：minewsemi@minew.com
Copyright© Shenzhen Minewsemi Co., Ltd.

Active Timing

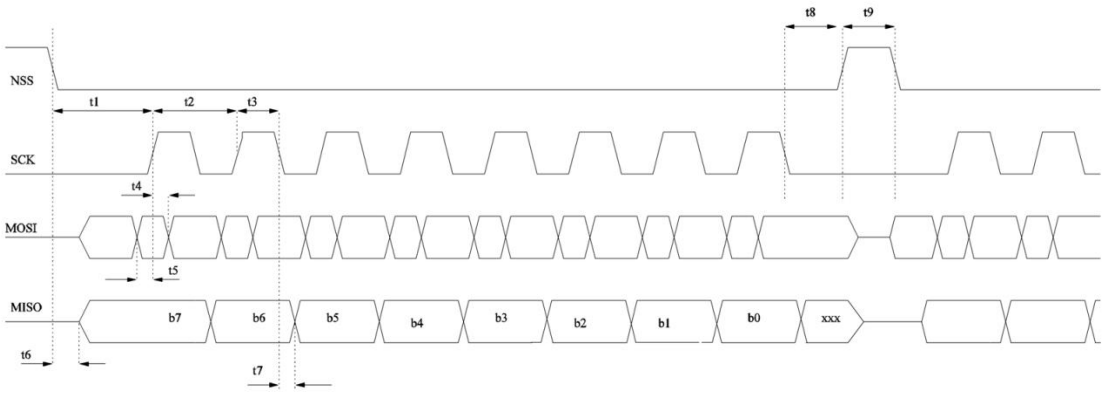

6.3.1 DIO with IRQ control

Commands Controlling the Radio IRQs and DIOs(At least one DIO is required for IRQ, and BUSY cable is also required to be used compulsorily）.

Command	Operate code	Parameters	Description
SetDioIrqParams	0x08	IrqMask[15:0], Dio1Mask[15:0], Dio2Mask[15:0], Dio3Mask[15:0],	Configure the IRQ and the DIOs attached to each IRQ
GetIrqStatus	0x12	-	Get the values of the triggered IRQs
ClearIrqStatus	0x02	-	Clear one or several of the IRQs
SetDIO2AsRfSwitchCtrl	0x9D	Enable	Configure radio to control an RF switch from DIO2
SetDIO3AsTcxoCtrl	0x97	tcxoVoltage, timeout[23:0]	Configure the radio to use a TCXO controlled by DIO3

Web：www.minewsemi.com Tel：0755-2801 0353 E-mail：minewsemi@minew.com
Copyright© Shenzhen Minewsemi Co., Ltd.

6.3.2 Module TX,RX Mode controls

In ANT_SW1 and DIO2 connection Point, the two connection points are IO pin and external MCU GPIO for detecting TX and RX level pins, ANT_SW2 is the synchronization control pin:

1) When IO pin detects a high level, pin ANT_SW2 sets the level to low, the mode is TX mode .
2) When IO pin detects a low level, pin ANT_SW2 sets the level to high, the mode is RX mode

Mode	IO	ANT_SW2
TX	1	0
RX	0	1

Module power consumption description

The following power consumption test is conducted under the normal temperature condition when the power supply voltage is 3.3V. The power consumption in the 915MHz frequency band is measured.

Mode \ Power	SF Mode	Peak	Avg
TX	SF7	112.01mA	98.60mA
	SF12	123.32mA	115.62mA

Mode \ Power	Peak	Avg
Sleep	538.41uA	0.85uA
RX	4.76mA	4.22mA

Web：www.minewsemi.com Tel：0755-2801 0353 E-mail：minewsemi@minew.com
Copyright© Shenzhen Minewsemi Co., Ltd.

7 Electrical Schematic

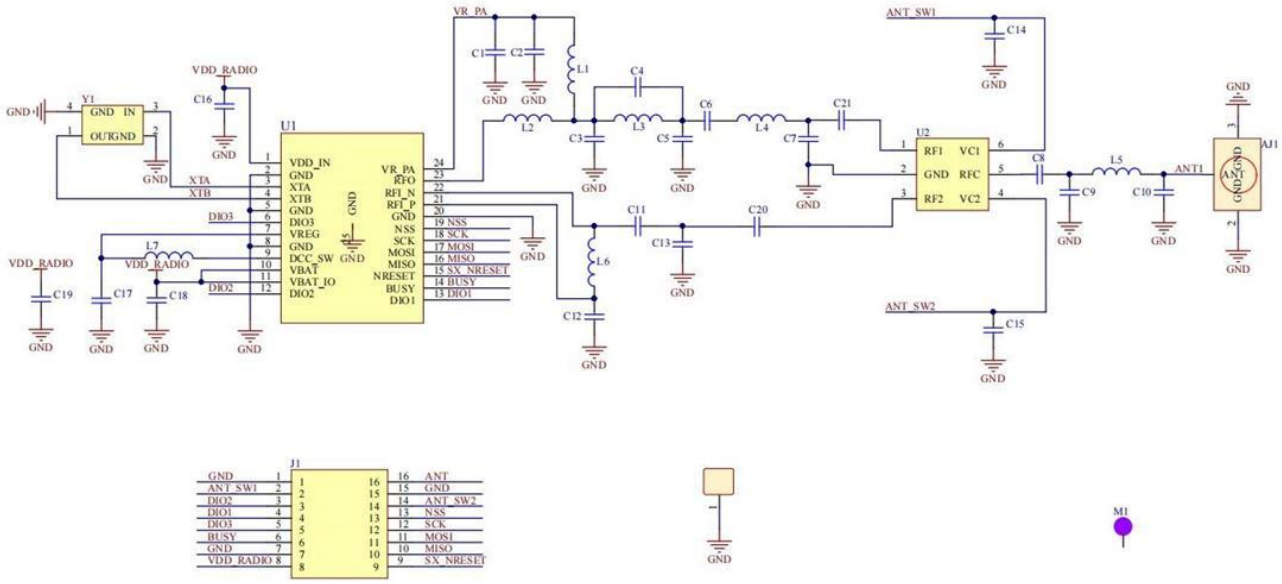

Notice：Before placing an order, please confirm the specific configuration required with the salesperson.

Web：www.minewsemi.com Tel：0755-2801 0353 E-mail：minewsemi@minew.com

Copyright© Shenzhen Minewsemi Co., Ltd.

8 PCB Layout

Module antenna area couldn't have GND plane or metal cross line, couldn't place components nearby. It is better to make hollow out or clearance treatment or place it on the edge of PCB board.

Layout notes：

1) Preferred Module antenna area completely clearance and not be prevented by metals, otherwise it will influence antenna's effect (as above DWG. indication).
2) Cover the external part of module antenna area with copper as far as possible to reduce the main board's signal cable and other disturbing.
3) It is preferred to have a clearance area of 4 square meter or more area around the module antenna (including the shell) to reduce the influence to antenna.
4) Device should be grounded well to reduce the parasitic inductance.
5) Do not cover copper under module's antenna in order to avoid affect signal radiation or lead to transmission distance affected.
6) Antenna should keep far from other circuits to prevent radiation efficiency reduction or affects the normal operation of other lines.
7) Module should be placed on edge of circuit board and keep a distance away from other circuits.
8) Suggesting to use magnetic beads to insulate module's access power supply.

Web：www.minewsemi.com Tel：0755-2801 0353 E-mail：minewsemi@minew.com
Copyright© Shenzhen Minewsemi Co., Ltd.

9 Reflow and Soldering

1) Do SMT according to above reflow oven temperature deal curve. Max. Temperature is 260℃;

   Refer to IPC/JEDEC standard；Peak TEMP<260℃；Times：≤2 times，suggest only do once reflow soldering on module surface in case of SMT double pad involved. Contact us if special crafts involved.

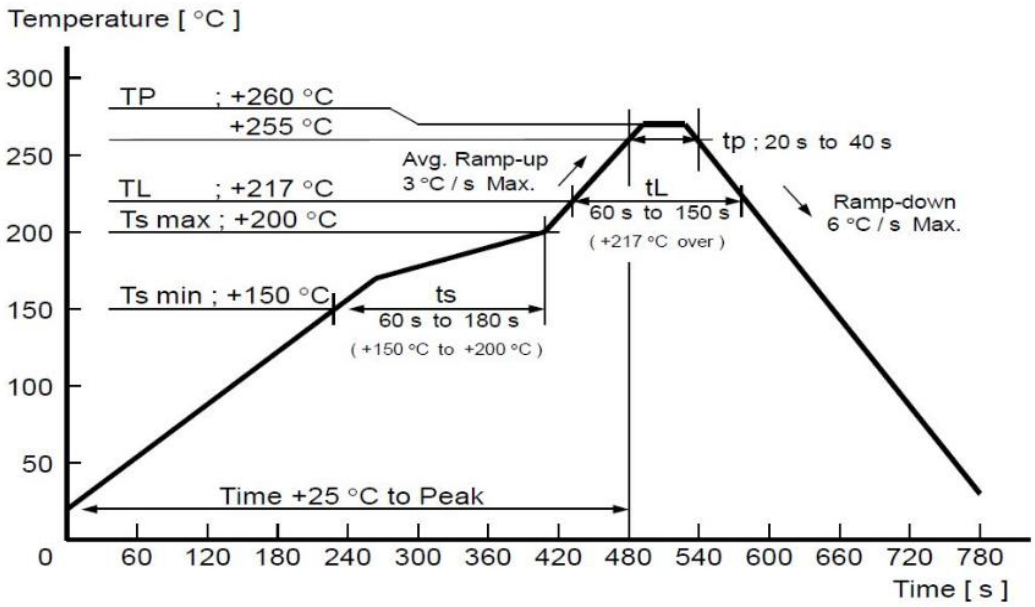

2) Suggesting to make 0.2mm thickness of module SMT for partial ladder steel mesh, then make the opening extend 0.8mm

3) After unsealing, it cannot be used up at one time, should be vacuumed for storage, couldn't be exposed in the air for long time. Please avoid getting damp and soldering-pan oxidizing. If there are 7 to 30 days interval before using online SMT, suggest to bake at 65-70 ℃ for 24 hours without disassembling the tape.

4) Before using SMT, please adopt ESD protection measure.

Web：www.minewsemi.com Tel：0755-2801 0353 E-mail：minewsemi@minew.com
Copyright© Shenzhen Minewsemi Co., Ltd.

10 Package Information

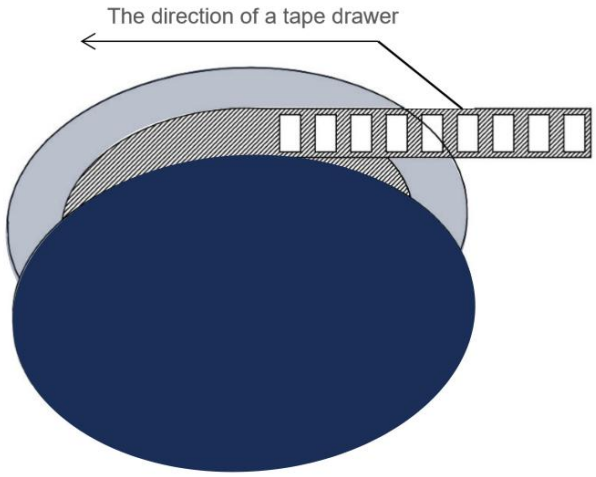

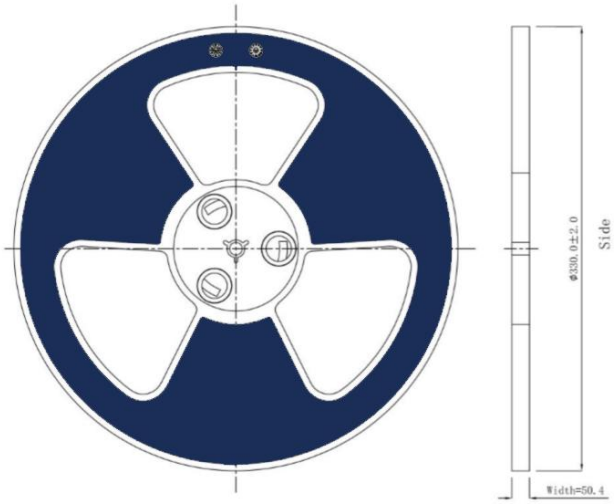

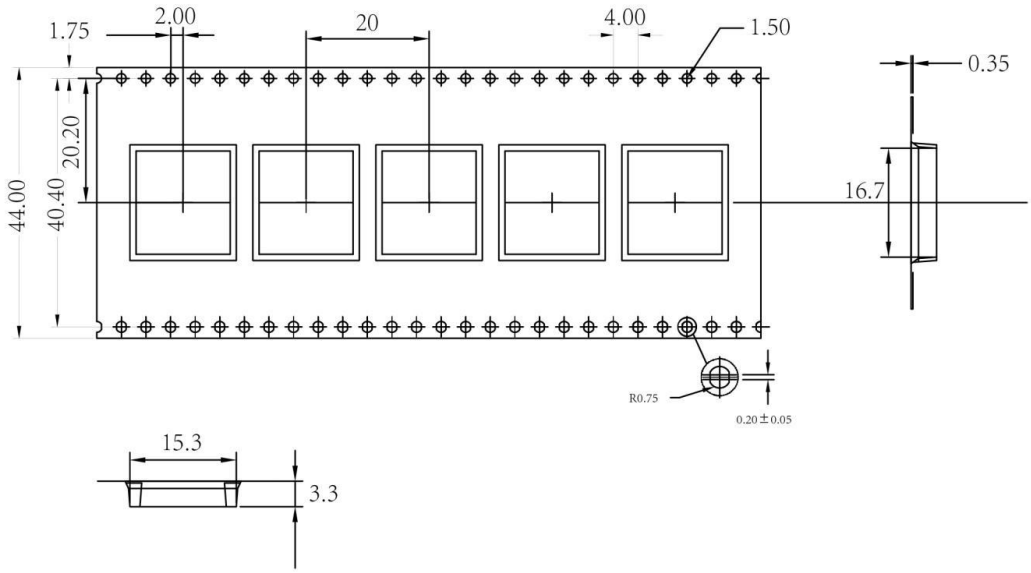

*（Default unit：mm　　Default tolerance：±0.1）

Packing detail	Specification	Net weight	Gross weight	Dimension
Quantity	850PCS	935g	1475g	W=44mm，T=0.35mm

*** Note:** Default weight tolerance all are within 10g（except the special notes)

Web：www.minewsemi.com　Tel：0755-2801 0353　E-mail：minewsemi@minew.com
Copyright© Shenzhen Minewsemi Co., Ltd.

Quality

Cognizant of our commitment to quality, we operate our own factory equipped with state-of-the-art production facilities and a meticulous quality management system. We hold certifications for ISO9001, ISO14001, ISO27001, OHSA18001, BSCI.

Every product undergoes stringent testing, including transmit power, sensitivity, power consumption, stability, and aging tests. Our fully automated module production line is now in full operation, boasting a production capacity in the millions, capable of meeting high-volume production demands.

Contact Us

Shenzhen Minewsemi Co., Ltd. is committed to swiftly delivering top-quality connectivity modules to our customers. For assistance and support, please feel free to contact our relevant personnel, or contact us as follows:

Web：www.minewsemi.com

Email：minewsemi@minew.com

Linkedin：www.linkedin.com/company/minewsemi

Shop：https://minewsemi.en.alibaba.com/

Tel：+86 0755-28010353

Address：3rd Floor,I Building, Gangzhilong Science Park, NO.6, Qinglong Road,Longhua District, Shenzhen, China

Click the icon to view and download the latest product documents electronically.

Copyright© Shenzhen Minewsemi Co., Ltd.

Copyright Statement

This manual and all the contents contained in it are owned by Shenzhen Minewsemi Co., Ltd. and are protected by Chinese laws and applicable international conventions related to copyright laws.

The certified trademarks included in this product and related documents have been licensed for use by MinewSemi. This includes but is not limited to certifications such as BQB, RoHS, REACH, CE, FCC, BQB, IC, SRRC, TELEC, WPC, RCM, WEEE, etc. The respective textual trademarks and logos belong to their respective owners. For example, the Bluetooth® textual trademark and logo are owned by Bluetooth SIG, Inc. Other trademarks and trade names are those of their respective owners. Due to the small size of the module product, the "®" symbol is omitted from the Bluetooth Primary Trademarks information in compliance with regulations.

The company has the right to change the content of this manual according to the technological development, and the revised version will not be notified otherwise. Without the written permission and authorization of the company, any individual, company, or organization shall not modify the contents of this manual or use part or all of the contents of this manual in other ways. Violators will be held accountable in accordance with the law.

Tel: 0086-755-2801 0353
Email: minewsemi@minew.com
Web: www.minewsemi.com
Address: 3rd Floor, Building I, Gangzhilong Science Park, Qinglong RoadLonghua District, Shenzhen 518109, China

Copyright© Shenzhen Minewsemi Co., Ltd.

This device complies with part 15 of the FCC Rules. Operation is subject to the following two conditions: (1) This device may not cause harmful interference, and (2) this device must accept any interference received, including interference that may cause undesired operation.

FCC warning:
Any Changes or modifications not expressly approved by the party responsible for compliance could void the user's authority to operate the equipment.

Note: This equipment has been tested and found to comply with the limits for a Class B digital device, pursuant to part
15 of the FCC Rules. These limits are designed to provide reasonable protection against harmful interference in a residential installation. This equipment generates uses and can radiate radio frequency energy and, if not installed and used in accordance with the instructions, may cause harmful interference to radio communications. However, there is
no guarantee that interference will not occur in a particular installation. If this equipment does cause harmful interference to radio or television reception, which can be determined by turning the equipment off and on, the user is encouraged to try to correct the interference by one or more of the following measures:
-Reorient or relocate the receiving antenna.
-Increase the separation between the equipment and receiver.
-Connect the equipment into an outlet on a circuit different from that to which the receiver is connected.
-Consult the dealer or an experienced radio/TV technician for help.

This equipment complies with FCC radiation exposure limits set forth for an uncontrolled environment. This equipment should be installed and operated with minimum distance 20cm between the radiator & your body.

2.2 List of applicable FCC rules

List the FCC rules that are applicable to the modular transmitter. These are the rules that specifically establish the bands of operation, the power, spurious emissions, and operating fundamental frequencies. DO NOT list compliance to unintentional-radiator rules (Part 15 Subpart B) since that is not a condition of a module grant that is extended to a host manufacturer. See also Section 2.10 below concerning the need to notify host manufacturers that further testing is required.3

Explanation: This module meets the requirements of FCC part 15C(15.249).

2.3 Summarize the specific operational use conditions

Describe use conditions that are applicable to the modular transmitter, including for example any limits on antennas, etc. For example, if point-to-point antennas are used that require reduction in power or compensation for cable loss, then this information must be in the instructions. If the use condition limitations extend to professional users, then instructions must state that this information also extends to the host manufacturer's instruction manual. In addition, certain information may also be needed, such as peak gain per frequency band and minimum gain, specifically for master devices in 5 GHz DFS bands.

Explanation: This module is stand-alone modular. If the end product will involve the Multiple simultaneously transmitting condition or different operational conditions for a stand-alone modular transmitter in a host, host manufacturer have to consult with module manufacturer for the installation method in end system.

2.4 Limited module procedures

If a modular transmitter is approved as a "limited module", then the module manufacturer is responsible for approving the host environment that the limited module is used with. The manufacturer of a limited module must describe, both in the filing and in the installation instructions, the alternative means that the limited module manufacturer uses to verify that the host meets the necessary requirements to satisfy the module limiting conditions.

A limited module manufacturer has the flexibility to define its alternative method to address the conditions that limit the initial approval, such as: shielding, minimum signaling amplitude, buffered modulation/data inputs, or power supply regulation. The alternative method could include that the limited module manufacturer reviews detailed test data or host designs prior to giving the host manufacturer approval.

This limited module procedure is also applicable for RF exposure evaluation when it is necessary to demonstrate compliance in a specific host. The module manufacturer must state how control of the product into which the modular transmitter will be installed will be maintained such that full compliance of the product is always ensured. For additional hosts other than the specific host originally granted with a limited module, a Class II permissive change is required on the module grant to register the additional host as a specific host also approved with the module.

2.5 Trace antenna designs

For a modular transmitter with trace antenna designs, see the guidance in Question 11 of KDB Publication 996369 D02 FAQ – Modules for Micro-Strip Antennas and traces. The integration information shall include for the TCB review the integration instructions for the following aspects: layout of trace design, parts list (BOM), antenna, connectors, and isolation requirements.

a) Information that includes permitted variances (e.g., trace boundary limits, thickness, length, width, shape(s), dielectric constant, and impedance as applicable for each type of antenna);

b) Each design shall be considered a different type (e.g., antenna length in multiple(s) of frequency, the wavelength, and antenna shape (traces in phase) can affect antenna gain and must be considered);

c) The parameters shall be provided in a manner permitting host manufacturers to design the printed circuit (PC) board layout;

d) Appropriate parts by manufacturer and specifications;

e) Test procedures for design verification; and

f) Production test procedures for ensuring compliance.

The module grantee shall provide a notice that any deviation(s) from the defined parameters of the antenna trace, as described by the instructions, require that the host product manufacturer must notify the module grantee that they wish to change the antenna trace design. In this case, a Class II permissive change application is required to be filed by the grantee, or the host manufacturer can take responsibility through the change in FCC ID (new application) procedure followed by a Class II permissive change application.

Explanation: The antenna is not a trace antenna.

2.6 RF exposure considerations

It is essential for module grantees to clearly and explicitly state the RF exposure conditions that permit a host product manufacturer to use the module. Two types of instructions are required for RF exposure information: (1) to the host product manufacturer, to define the application conditions (mobile, portable –xx cm from a person's body); and (2) additional text needed for the host product manufacturer to provide to end users in their end-product manuals. If RF exposure statements and use conditions are not provided, then the host product manufacturer is required to take responsibility of the module through a change in FCC ID (new application).

Explanation: This module complies with FCC RF radiation exposure limits set forth for an uncontrolled environment, This equipment should be installed and operated with a minimum distance of 20 centimeters between the radiator and your body." This module is designed to comply with the FCC statement, FCC ID is:2BDJ6-MS21SF1.

2.7 Antennas

A list of antennas included in the application for certification must be provided in the instructions. For modular transmitters approved as limited modules, all applicable professional installer instructions must be included as part of the information to the host product manufacturer. The antenna list shall also identify the antenna types (monopole, PIFA, dipole, etc. (note that for example an "omni-directional antenna" is not considered to be a specific "antenna type").

For situations where the host product manufacturer is responsible for an external connector, for example with an RF pin and antenna trace design, the integration instructions shall inform the installer that unique antenna connector must be used on the Part 15 authorized transmitters used in the host product. The module manufacturers shall provide a list of acceptable unique connectors.

Explanation: The EUT has a External Antenna, If you desire to increase antenna gain and either change antenna type or use same antenna type certified, a Class II permissive change application is required to be filed by us, or you (host manufacturer) can take responsibility through the change in FCC ID (new application) procedure followed by a Class II permissive change application

2.8 Label and compliance information

Grantees are responsible for the continued compliance of their modules to the FCC rules. This includes advising host product manufacturers that they need to provide a physical or e-label stating "Contains FCC ID" with their finished product. See Guidelines for Labeling and User Information for

RF Devices –KDB Publication 784748.

Explanation:The host system using this module, should have label in a visible area indicated the following texts: "Contains FCC ID: 2BDJ6-MS21SF1.

2.9 Information on test modes and additional testing requirements5

Additional guidance for testing host products is given in KDB Publication 996369 D04 Module Integration Guide. Test modes should take into consideration different operational conditions for a stand-alone modular transmitter in a host, as well as for multiple simultaneously transmitting modules or other transmitters in a host product.

The grantee should provide information on how to configure test modes for host product evaluation for different operational conditions for a stand-alone modular transmitter in a host, versus with multiple, simultaneously transmitting modules or other transmitters in a host.

Grantees can increase the utility of their modular transmitters by providing special means, modes, or instructions that simulates or characterizes a connection by enabling a transmitter. This can greatly simplify a host manufacturer's determination that a module as installed in a host complies with FCC requirements.

Explanation: MS21SF1 can increase the utility of our modular transmitters by providing instructions that simulates or characterizes a connection by enabling a transmitter.