LoRa Module

MS24SF1

Specification V1.0

MinewSemi

- Subsidiary of Minew Technologies
- Nordicsemi Strategy Partner
- Bluetooth SIG Associated Member
- Fira Alliance Adopter Member

Copyright© Shenzhen Minewsemi Co., Ltd.

nRF52840+Semtech SX1262 LoRa Module MS24SF1

PCB+IPEX

The MS24SF1 module is a combo module that uses Semtech's LoRa wireless transceiver chip SX1262, supporting global ISM frequencies, and Nordic's low-power BLE chip nRF52840 as the main controller. It is a low-power module that supports both long-range and short-range data transmission, with multiple easy-to-use interfaces for LoRaWAN®. In receive mode, it only consumes 9.3mA of current. The LoRa part achieves a transmission power of up to +22dBm through an internally integrated efficient power amplifier, with higher receiving sensitivity. LoRa sensitivity can reach as low as -146dBm, and BLE sensitivity can reach -96dBm. The module supports BLE transparent data transmission and complies with the physical layer requirements of the LoRaWAN® standard specification. It also supports LoRa® P2P (point-to-point) communication and allows customers to quickly establish private long-range LoRa® networks.

The MS24SF1 module is suitable for various applications that require long-distance data collection and low-power transmission control.

MS24SF1 Basic Parameters			
Model	MS24SF1	**Antenna**	PCB+IPEX
ChipSet	nRF52840+SX1262	**Dimension**	27*23.5*2.8mm
RSSI	LoRa: -146dBm	**Tx. Power**	LoRa: 15 ~ + 22dBm
	BLE: -96dBm, 1Mbps -103dBm, 125Kbps		BLE: -40 ~+8dBm
TX Current	122.8mA	**Rx Current**	9.3mA
GPIO	35	**Firmware**	None
Application	Smart Metering, Auto Buildings, Agriculture Sensor, Smart Cities, Cold-chain Transportation		

Copyright© Shenzhen Minewsemi Co., Ltd.
This manual and all the contents contained in it are owned by Shenzhen Minewsemi Co., Ltd. and are protected by Chinese laws and applicable international conventions related to copyright laws.The company has the right to change the content of this manual according to the technological development, and the revised version will not be notified otherwise. Without the written permission and authorization of the company, any individual, company, or organization shall not modify the contents of this manual or use part or all of the contents of this manual in other ways. Violators will be held accountable in accordance with the law.

INDEX

1 Product Introduction - 4 -
2 Mechanical Drawing - 5 -
3 Block Diagram - 5 -
4 Electrical Specification - 6 -
5 Pin Description - 6 -
6 Pin Definition - 7 -
7 Module Operation Instruction - 8 -
7.1 Block diagram - 8 -
7.1.1 Power supply - 9 -
7.1.2 SLP interface character - 9 -
7.1.3 Internal DIO with IRQ control - 10 -
7.1.4 Module internal TX,RX mode controls - 11 -
8 Electrical Schematic - 12 -
9 PCB Layout - 13 -
10 Certification - 15 -
10.1 CE Certification - 15 -
10.2 FCC Certification - 15 -
11 Reflow and Soldering - 18 -
12 Package Information - 19 -
12.1 Package dimension - 19 -
12.2 Part number description - 20 -
13 Quality Disclaimer - 21 -
14 Revision History - 21 -
COPYRIGHT STATEMENT - 22 -

This manual and all the contents contained in it are owned by Shenzhen Minewsemi Co., Ltd. and are protected by Chinese laws and applicable international conventions related to copyright laws.The company has the right to change the content of this manual according to the technological development, and the revised version will not be notified otherwise. Without the written permission and authorization of the company, any individual, company, or organization shall not modify the contents of this manual or use part or all of the contents of this manual in other ways. Violators will be held accountable in accordance with the law.

1 Product Introduction

This module integrates both BLE and LoRa wireless connectivity modes, supporting FSK, GFSK, and LoRa modulation and demodulation modes. It enables point-to-point communication and supports data transmission via BLE. The device is initially shipped as a blank module with demo firmware for testing purposes. It offers long-range communication capabilities, extremely low power consumption, with a current consumption of only 9.3mA in receive mode and a maximum current consumption of 122.8mA in transmit mode, at a voltage of 3.1V. The module utilizes Semtech's patented LoRa™ modulation technology, which provides significant advantages in terms of interference resistance and long-distance transmission. This technology resolves the challenge of simultaneously achieving long-distance communication, interference resistance, and low power consumption, which traditional design approaches struggle with. Additionally, the networking features of BLE complement the limitations of wireless connectivity for short-range networking.

Features :

- With ARM Cortex M4 core
- Low power consumption, dual low power chip combination
- Long-distance transmission, up to 5KM in urban environments
- Unique dual IPEX+PCB design, flexible antenna options
- BLE support PCB and IPEX optional
- BLE5.3, support long-distance BLE function
- More IO ports supported, including UART, SPI, and I2 etc.

Copyright© Shenzhen Minewsemi Co., Ltd.
This manual and all the contents contained in it are owned by Shenzhen Minewsemi Co., Ltd. and are protected by Chinese laws and applicable international conventions related to copyright laws. The company has the right to change the content of this manual according to the technological development, and the revised version will not be notified otherwise. Without the written permission and authorization of the company, any individual, company, or organization shall not modify the contents of this manual or use part or all of the contents of this manual in other ways. Violators will be held accountable in accordance with the law.

2 Mechanical Drawing

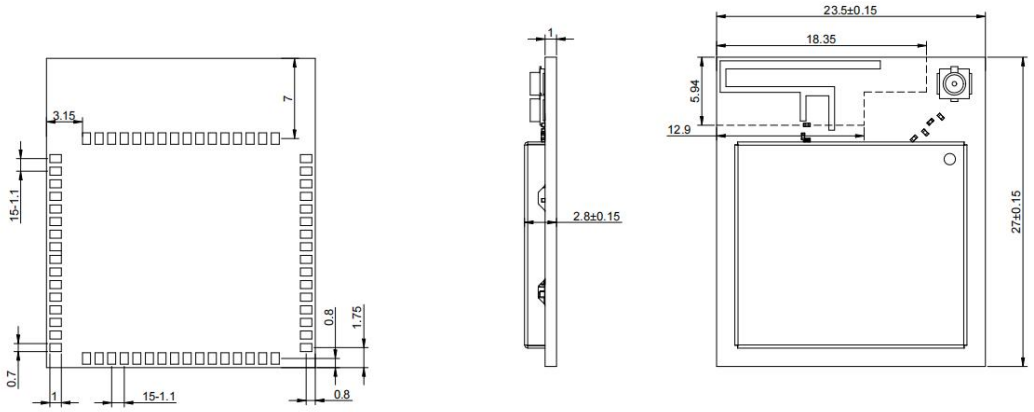

*（unit：mm　　Tolerance: +/- 0.1, default）

3 Block Diagram

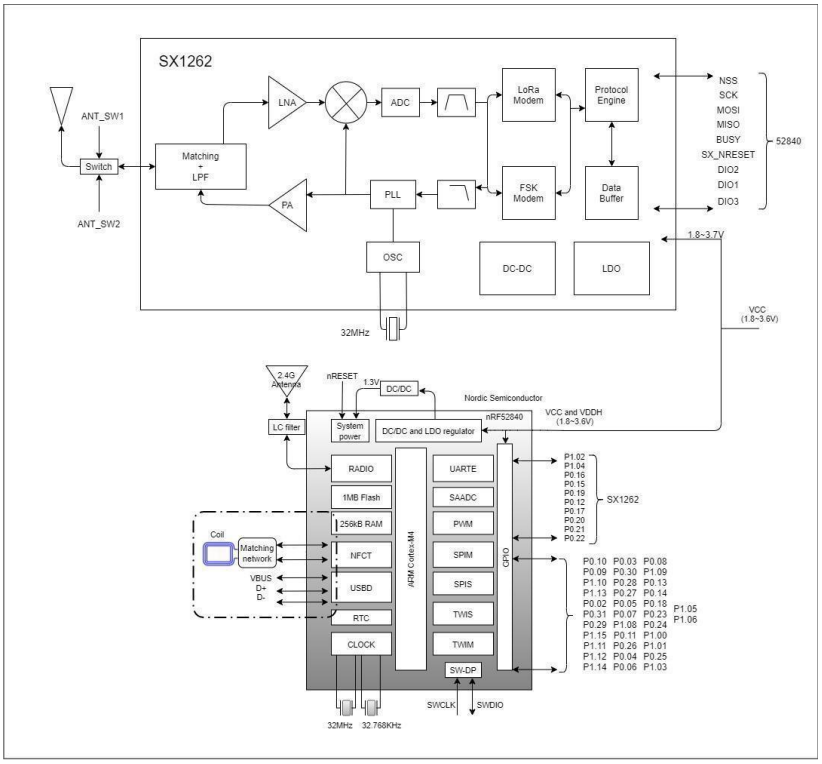

Copyright© Shenzhen Minewsemi Co., Ltd.
This manual and all the contents contained in it are owned by Shenzhen Minewsemi Co., Ltd. and are protected by Chinese laws and applicable international conventions related to copyright laws. The company has the right to change the content of this manual according to the technological development, and the revised version will not be notified otherwise. Without the written permission and authorization of the company, any individual, company, or organization shall not modify the contents of this manual or use part or all of the contents of this manual in other ways. Violators will be held accountable in accordance with the law.

4 Electrical Specification

Parameter	Values	Notes
Operating Voltage	1.8V-3.7V	To ensure RF operation,3.3V power supply voltage is recommended
Operating Temperature	-40℃~+85℃	
Tx. Power	LoRa: +22dBm BLE: +8dBm	setting
ISM Frequency	LoRa: 150~960MHz BLE: 2.4GHz	optional
RX Current	9.3mA	Rx Mode
TX Current	122.8mA	Tx Mode
Dimension	27*23.5*2.8mm	
GPIO	35	GPIOs, I2C, I2S, PWM, UART,USB

5 Pin Description

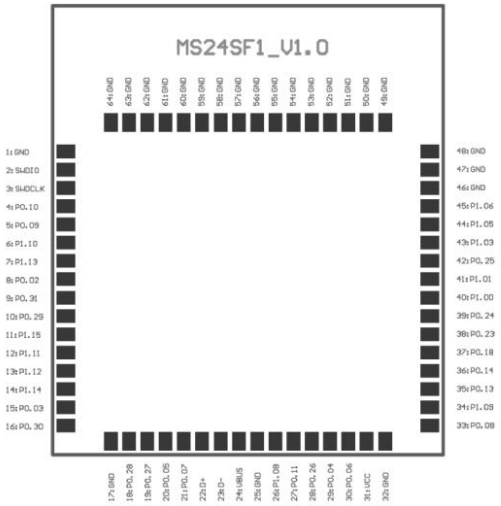

Copyright© Shenzhen Minewsemi Co., Ltd.
This manual and all the contents contained in it are owned by Shenzhen Minewsemi Co., Ltd. and are protected by Chinese laws and applicable international conventions related to copyright laws. The company has the right to change the content of this manual according to the technological development, and the revised version will not be notified otherwise. Without the written permission and authorization of the company, any individual, company, or organization shall not modify the contents of this manual or use part or all of the contents of this manual in other ways. Violators will be held accountable in accordance with the law.

6 Pin Definition

Pin name	Definition	Description	Note
VCC	Power supply positive terminal	Power supply: 1.7V to 3.6V, with a standard voltage of 3.3V	
VBUS	Power	Power conversion adapter for USB interface connection	
GND	Power negative	GND	
SWDCLK/SWDIO	Soft-wave Download	Used for firmware debugging	
P0.02 - P0.11 P0.13 -P0.14 P0.23 - P0.31 P1.00 - P1.01 P1.03 P1.05 - P1.06 P1.08 - P1.15	GPIO	General purposed IO port	
D+	USB port	USB D+	
D-	USB port	USB D-	
P0.18	RESET		

Copyright© Shenzhen Minewsemi Co., Ltd.
This manual and all the contents contained in it are owned by Shenzhen Minewsemi Co., Ltd. and are protected by Chinese laws and applicable international conventions related to copyright laws. The company has the right to change the content of this manual according to the technological development, and the revised version will not be notified otherwise. Without the written permission and authorization of the company, any individual, company, or organization shall not modify the contents of this manual or use part or all of the contents of this manual in other ways. Violators will be held accountable in accordance with the law.

7 Module Operation Instruction

7.1 Block diagram

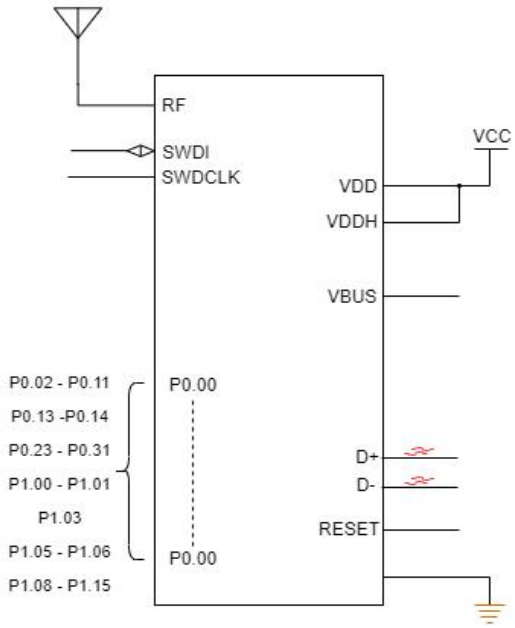

Copyright© Shenzhen Minewsemi Co., Ltd.
This manual and all the contents contained in it are owned by Shenzhen Minewsemi Co., Ltd. and are protected by Chinese laws and applicable international conventions related to copyright laws. The company has the right to change the content of this manual according to the technological development, and the revised version will not be notified otherwise. Without the written permission and authorization of the company, any individual, company, or organization shall not modify the contents of this manual or use part or all of the contents of this manual in other ways. Violators will be held accountable in accordance with the law.

7.1.1 Power supply

The working voltage is 1.8V-3.6V, to ensure a stable function, supply voltage should be 3.3V as far as possible.

7.1.2 SLP interface character

SPI runs on an external SCK clock, enabling it to reach a rate of 16MHz.

The transmission starts when the NSS pin level becomes low. When the NSS is high level, the MISO is in a high impedance state.

SPI Timing Requirements(the chip-set only realizes the slave function).

Symbol	Description	Minimum	Typical	Maximum	Unit
t1	NSS falling edge to SCK setup time	32	-	-	ns
t2	SCK period	62.5	-	-	ns
t3	SCK high time	31.25	-	-	ns
t4	MOSI to SCK hold time	5	-	-	ns
t5	MOSI to SCK setup time	5	-	-	ns
t6	MOSI to SCK setup time	0	-	15	ns
t7	SCK falling to MISO delay	0	-	15	ns
t8	SCK to NSS rising edge hold time	31.25	-	-	ns
t9	NSS high time	125	-	-	ns
t10	NSS falling edge to SCK setup time when switching from SLEEP to STDBY_RC mode	100	-	-	s
t11	NSS falling to MISO delay when switching from SLEEP to STDBY_RC mode	0	-	150	s

Copyright© Shenzhen Minewsemi Co., Ltd.
This manual and all the contents contained in it are owned by Shenzhen Minewsemi Co., Ltd. and are protected by Chinese laws and applicable international conventions related to copyright laws. The company has the right to change the content of this manual according to the technological development, and the revised version will not be notified otherwise. Without the written permission and authorization of the company, any individual, company, or organization shall not modify the contents of this manual or use part or all of the contents of this manual in other ways. Violators will be held accountable in accordance with the law.

Active Timing

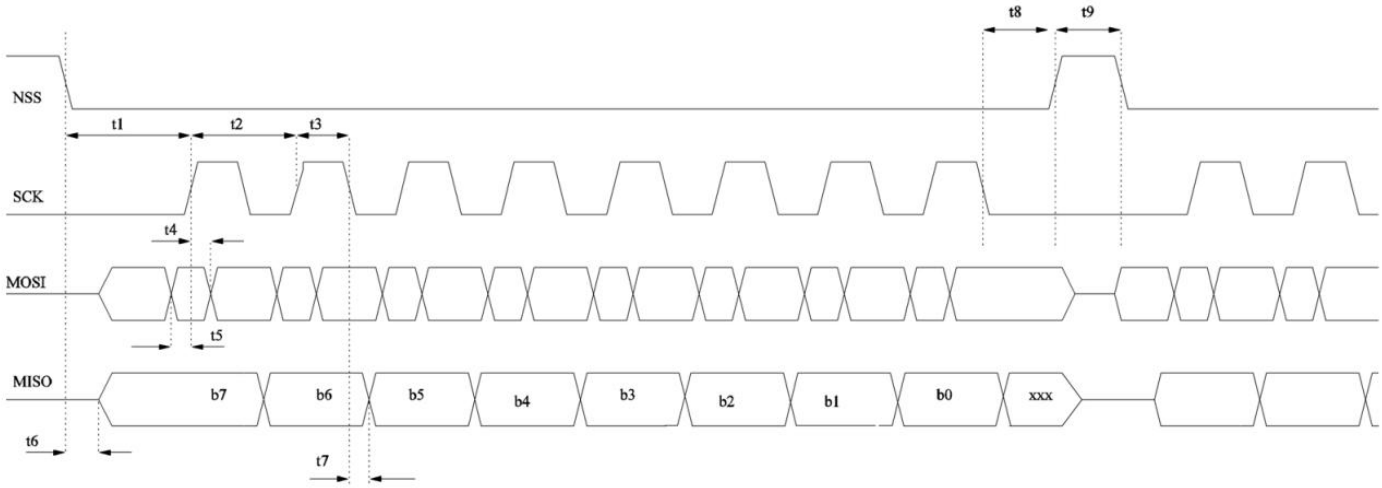

7.1.3 Internal DIO with IRQ control

Commands Controlling the Radio IRQs and DIOs(At least one DIO is required for IRQ, and BUSY cable is also required to be used compulsorily）

Command	Opcode	Parameters	Description
SetDioIrqParams	0x08	IrqMask[15:0], Dio1Mask[15:0], Dio2Mask[15:0], Dio3Mask[15:0],	Configure the IRQ and the DIOs attached to each IRQ
GetIrqStatus	0x12	-	Get the values of the triggered IRQs
ClearIrqStatus	0x02	-	Clear one or several of the IRQs
SetDIO2AsRfSwitchCtrl	0x9D	Enable	Configure radio to control an RF switch from DIO2
SetDIO3AsTcxoCtrl	0x97	tcxoVoltage, timeout[23:0]	Configure the radio to use a TCXO controlled by DIO3

Copyright© Shenzhen Minewsemi Co., Ltd.
This manual and all the contents contained in it are owned by Shenzhen Minewsemi Co., Ltd. and are protected by Chinese laws and applicable international conventions related to copyright laws. The company has the right to change the content of this manual according to the technological development, and the revised version will not be notified otherwise. Without the written permission and authorization of the company, any individual, company, or organization shall not modify the contents of this manual or use part or all of the contents of this manual in other ways. Violators will be held accountable in accordance with the law.

7.1.4 Module internal TX,RX mode controls

P1.04 detection of TX and RX level pins, P1.02 is Synchronous control pin:

1)When P1.04 detects a high level, pin P1.02 sets the level to low, the mode is TX mode .

2)When P1.04 detects a low level, pin P1.02 sets the level to high, the mode is RX mode .

Mode	P1.04	P1.02
TX	1	0
RX	0	1

Copyright© Shenzhen Minewsemi Co., Ltd.
This manual and all the contents contained in it are owned by Shenzhen Minewsemi Co., Ltd. and are protected by Chinese laws and applicable international conventions related to copyright laws. The company has the right to change the content of this manual according to the technological development, and the revised version will not be notified otherwise. Without the written permission and authorization of the company, any individual, company, or organization shall not modify the contents of this manual or use part or all of the contents of this manual in other ways. Violators will be held accountable in accordance with the law.

8 Electrical Schematic

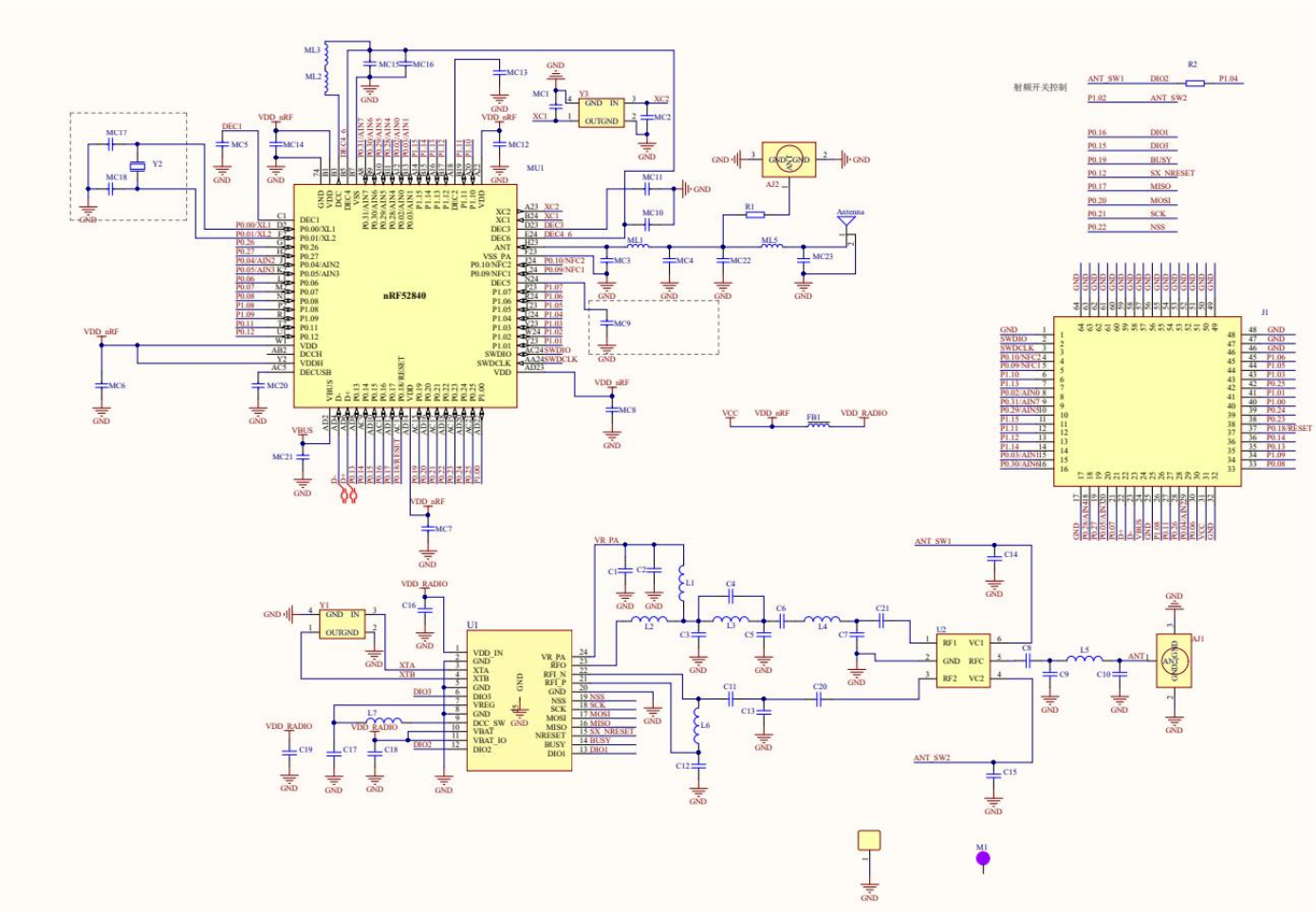

 Copyright© Shenzhen Minewsemi Co., Ltd.
This manual and all the contents contained in it are owned by Shenzhen Minewsemi Co., Ltd. and are protected by Chinese laws and applicable international conventions related to copyright laws. The company has the right to change the content of this manual according to the technological development, and the revised version will not be notified otherwise. Without the written permission and authorization of the company, any individual, company, or organization shall not modify the contents of this manual or use part or all of the contents of this manual in other ways. Violators will be held accountable in accordance with the law.

9 PCB Layout

No GND plane or metal cross wiring is allowed in the module antenna area, no components can be placed nearby, It is better to hollow out or headroom area, or lay up PCB edges.

Notice: Refer to examples as below, and highly suggest to use the first design and the adjustment of modules antenna design according to the first wiring.

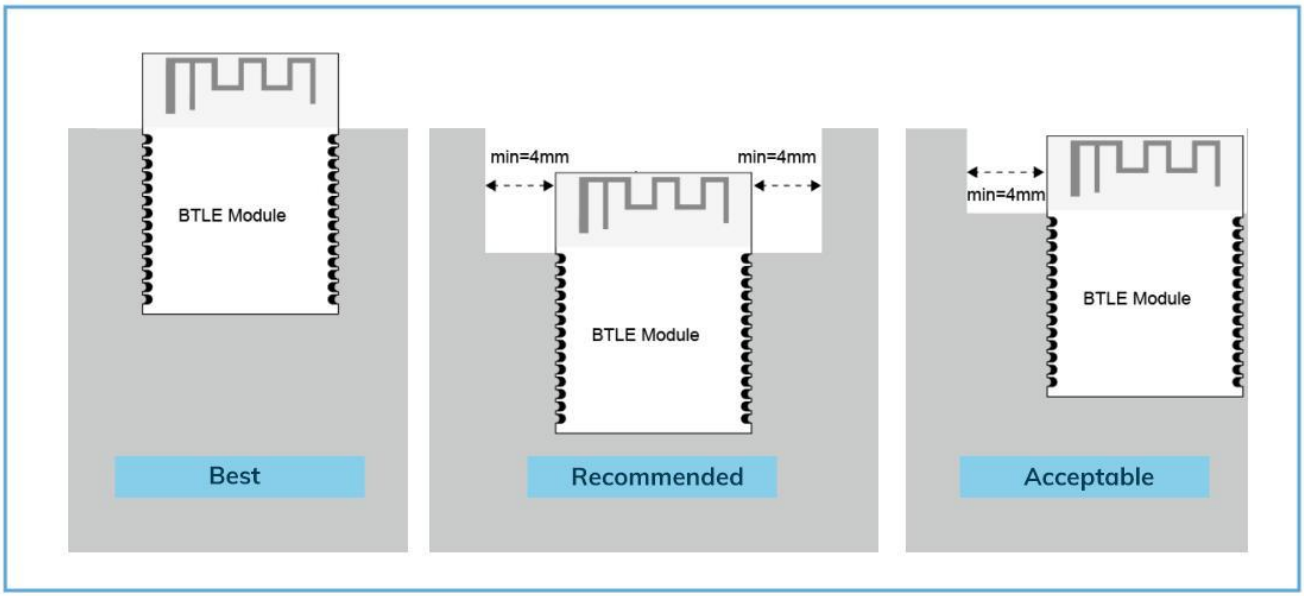

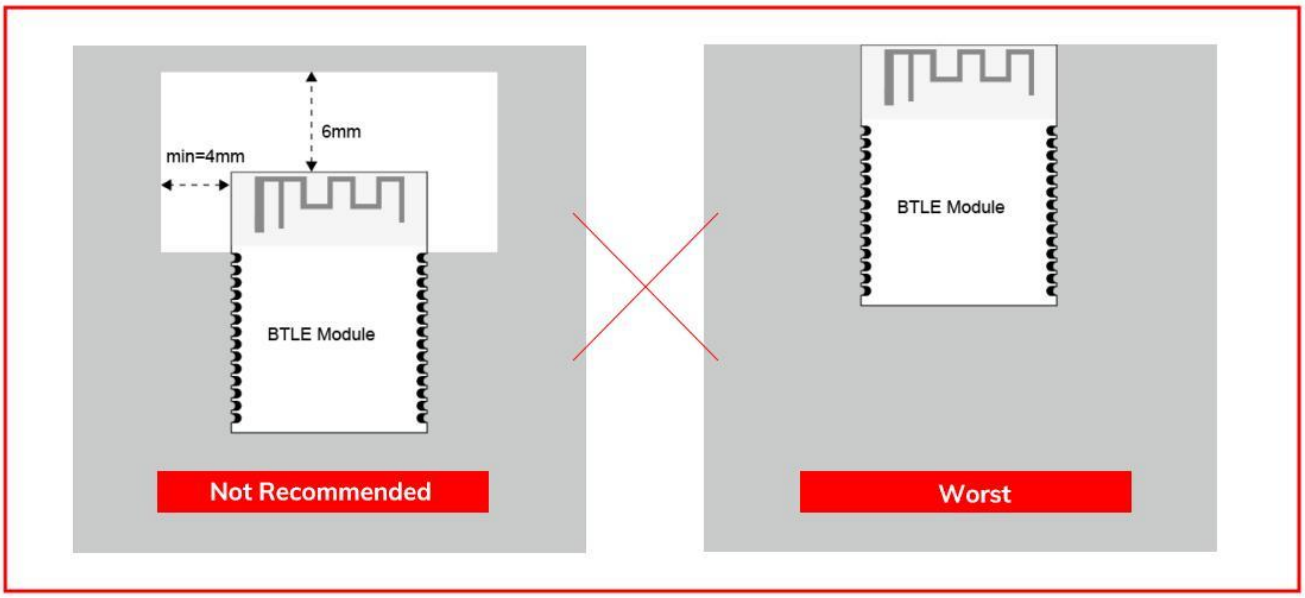

Copyright© Shenzhen Minewsemi Co., Ltd.
This manual and all the contents contained in it are owned by Shenzhen Minewsemi Co., Ltd. and are protected by Chinese laws and applicable international conventions related to copyright laws. The company has the right to change the content of this manual according to the technological development, and the revised version will not be notified otherwise. Without the written permission and authorization of the company, any individual, company, or organization shall not modify the contents of this manual or use part or all of the contents of this manual in other ways. Violators will be held accountable in accordance with the law.

Layout Propose：

1) The module antenna area must be completely headroom, No metal blocking is allowed, Otherwise, the antenna effect will be affected；
2) Outside the module antenna area, try to lay up copper to the full, to reduce the board signal line or other interference；
3) Module Antenna area all around（contain housing）,it is better to have a headroom area of 4mm and above，to reduce its impact on the antenna；
4) Devices shall be well grounded, reduce parasitic inductance；
5) Do not lay copper under the module antenna area, In case it affects the signal radiation，the transmission distance is affected；
6) The antenna should be placed away from other circuits, prevent the radiation efficiency from decreasing and affecting the normal use of other circuits；
7) The module shall be placed at the edge of the circuit board as far as possible, away from other circuits；
8) It is recommended to use magnetic beads to isolate the power supply of the module.

Copyright© Shenzhen Minewsemi Co., Ltd.
This manual and all the contents contained in it are owned by Shenzhen Minewsemi Co., Ltd. and are protected by Chinese laws and applicable international conventions related to copyright laws. The company has the right to change the content of this manual according to the technological development, and the revised version will not be notified otherwise. Without the written permission and authorization of the company, any individual, company, or organization shall not modify the contents of this manual or use part or all of the contents of this manual in other ways. Violators will be held accountable in accordance with the law.

10 Certification

10.1 CE Certification

MS24SF1 module is being tested and is expected to be compliant against the EU-Radio Equipment standards. OEM integrator should consult with qualified test house to verify all regulatory requirements have been met for their complete device.

10.2 FCC Certification

This device complies with part 15 of the FCC rules. Operation is subject to the following two conditions: (1) this device may not cause harmful interference, and (2) this device must accept any interference received, including interference that may cause undesired operation. Changes or modifications not expressly approved by the party responsible for compliance could void the user's authority to operate the equipment.

NOTE: This equipment has been tested and found to comply with the limits for a Class B digital device, pursuant to part 15 of the FCC Rules. These limits are designed to provide reasonable protection against harmful interference in a residential installation. This equipment generates uses and can radiate radio frequency energy and, if not installed and used in accordance with the instructions, may cause harmful interference to radio communications. However, there is no guarantee that interference will not occur in a particular installation. If this equipment does cause harmful interference to radio or television reception, which can be determined by turning the equipment off and on, the user is encouraged to try to correct the interference by one or more of the following measures:

-Reorient or relocate the receiving antenna.

-Increase the separation between the equipment and receiver.

-Connect the equipment into an outlet on a circuit different from that to which the receiver is connected.

-Consult the dealer or an experienced radio/TV technician for help important announcement Radiation Exposure Statement

This equipment complies with FCC radiation exposure limits set forth for an uncontrolled environment. This equipment should be installed and operated with minimum distance 20cm between the radiator and your body.

This transmitter must not be co-located or operating in conjunction with any other antenna or transmitter. Country Code selection feature to be disabled for products marketed to the US/ Canada.

This device is intended only for OEM integrators under the following conditions:

1.The antenna must be installed such that 20 cm is maintained between the antenna and users, and

2.The transmitter module may not be co-located with any other transmitter or antenna,

Copyright© Shenzhen Minewsemi Co., Ltd.
This manual and all the contents contained in it are owned by Shenzhen Minewsemi Co., Ltd. and are protected by Chinese laws and applicable international conventions related to copyright laws. The company has the right to change the content of this manual according to the technological development, and the revised version will not be notified otherwise. Without the written permission and authorization of the company, any individual, company, or organization shall not modify the contents of this manual or use part or all of the contents of this manual in other ways. Violators will be held accountable in accordance with the law.

As long as the three conditions above are met, further transmitter testing will not be required. However, the OEM integrator is still responsible for testing their end-product for any additional compliance requirements required with this module installed.
Important Note:
In the event that these conditions cannot be met (for example certain laptop configurations or co-location with another transmitter), then the FCC authorization is no longer considered valid and the FCC ID cannot be used on the final product. In these circumstances, the OEM integrator will be responsible for re-evaluating the end product (including the transmitter) and obtaining a separate FCC authorization End Product Labeling
The final end product must be labeled in a visible area with the following
" Contains FCC ID: 2BDJ6-MS24SF1".

Manual Information to the End User
The OEM integrator has to be aware not to provide information to the end user regarding how to install or remove this RF module in the user's manual of the end product which integrates this module.
The end user manual shall include all required regulatory information/warning as show in this manual.

Integration instructions for host product manufacturers according to KDB 996369 D03 OEM Manual v01

2.2 List of applicable FCC rules

CFR 47 FCC PART 15 SUBPART C has been investigated. It is applicable to the modular transmitter,It operates on the 2402MHz~2480MHz band and 902.3 MHz~914.9MHz, therefore, is within U.S. FCC part 15.247 standard

2.3 Specific operational use conditions

This module is stand-alone modular. If the end product will involve the Multiple simultaneously transmitting condition or different operational conditions for a stand-alone modular transmitter in a host, host manufacturer have to consult with module manufacturer for the installation method in end system.The PCB Antenna gain is 2.70dBi and External adhesive rod Antenna gain is 0.98dBi. Antenna could not be in no-load state when module is working. During debugging, it is suggested to add 50 ohms load to the antenna port to avoid damage or performance degradation of the module under long-time no-load condition.

2.4 Limited module procedures

Not applicable,Single Modular Approval Request

2.5 Trace antenna designs

Not applicable

2.6 RF exposure considerations

This equipment complies with FCC radiation exposure limits set forth for an uncontrolled environment. This equipment should be installed and operated with minimum distance 20cm between the radiator & your body.

Copyright© Shenzhen Minewsemi Co., Ltd.
This manual and all the contents contained in it are owned by Shenzhen Minewsemi Co., Ltd. and are protected by Chinese laws and applicable international conventions related to copyright laws. The company has the right to change the content of this manual according to the technological development, and the revised version will not be notified otherwise. Without the written permission and authorization of the company, any individual, company, or organization shall not modify the contents of this manual or use part or all of the contents of this manual in other ways. Violators will be held accountable in accordance with the law.

2.7 Antennas

This radio transmitter FCC ID:2BDJ6-MS24SF1 has been approved by Federal Communications Antenna types not included in this list that have a gain greater than the maximum gain indicated for any type listed are strictly prohibited for use with this device. The PCB Antenna gain is 2.70dBi and External adhesive rod Antenna gain is 0.98dBi.

2.8 Label and compliance information

The final end product must be labeled in a visible area with the following " Contains FCC ID: 2BDJ6-MS24SF1".If the size of the end product is larger than 24x16mm, then the following FCC part 15.19 statement has to also be available on the label:
This device complies with Part 15 of FCC rules. Operation is subject to the following two conditions:
(1)this device may not cause harmful interference and
(2)this device must accept any interference received, including interference that may cause undesired operation.

2.9 Information on test modes and additional testing requirements

Host manufacturer is strongly recommended to confirm compliance with FCC requirements for the transmitter when the module is installed in the host.

2.10 Additional testing, Part 15 Subpart B disclaimer

Host manufacturer is responsible for compliance of the host system with module installed with all other applicable requirements for the system such as Part 15 B.

2.11 Note EMI Considerations

Host manufacture is recommended to use D04 Module Integration Guide recommending as "best practice" RF design engineering testing and evaluation in case non-linear interactions generate additional non-compliant limits due to module placement to host components or properties.

2.12 How to make changes

This module is stand-alone modular. If the end product will involve the Multiple simultaneously transmitting condition or different operational conditions for a stand-alone modular transmitter in a host, host manufacturer have to consult with module manufacturer for the installation method in end system. According to the KDB 996369 D02 Q&A Q12, that a host manufacture only needs to do an evaluation (i.e., no C2PC required when no emission exceeds the limit of any individual device (including unintentional radiators) as a composite. The host manufacturer must fix any failure.

Copyright© Shenzhen Minewsemi Co., Ltd.
This manual and all the contents contained in it are owned by Shenzhen Minewsemi Co., Ltd. and are protected by Chinese laws and applicable international conventions related to copyright laws. The company has the right to change the content of this manual according to the technological development, and the revised version will not be notified otherwise. Without the written permission and authorization of the company, any individual, company, or organization shall not modify the contents of this manual or use part or all of the contents of this manual in other ways. Violators will be held accountable in accordance with the law.

11 Reflow and Soldering

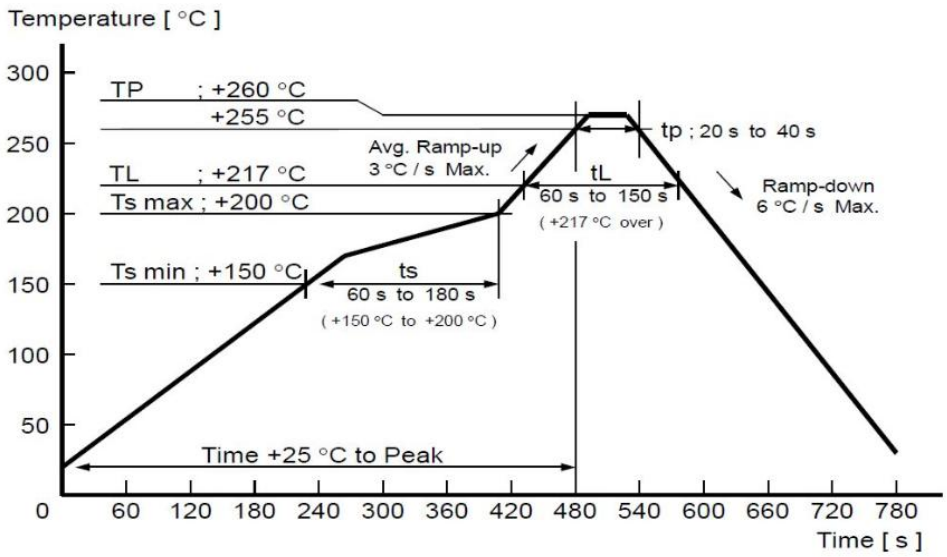

Profile Feature	Sn-Pb Assembly	Pb-Free Assembly
Solder Paste	Sn63/Pb37	Sn96.5/Ag3/Cu0.5
Preheat Temperature min (Tsmin)	100°C	150°C
Preheat Temperature max (Tsmax)	150°C	200°C
Preheat Time (Tsmin to Tsmax)(ts)	60-120 sec	60-120 sec
Average ramp-up rate (Tsmax to Tp)	3°C/second max	3°C/second max
Liquidous Temperature (TL)	183°C	217°C
Time (tL)Maintained Above (TL)	60-90 sec	30-90 sec
Peak Temperature (Tp)	220-235°C	230-250°C
Average ramp-down rate (Tp to Tsmax)	6°C/second max	6°C/second max
Time 25°C to peak temperature	6 minutes max	8 minutes max

Important:

- When SMT involves double-sided patch, it is recommended that the module surface be reflowed only once.
- For module SMT, it is recommended to make a partial stepped stencil with a thickness of 0.2mm, and the stencil hole should be extended by 0.8mm size.
- After opening the package, it should be stored in vacuum environment. Module should not be exposed to the air for a long time to prevent moisture and pad oxidation. If there is an interval of 7 to 30 days during SMT process, it is recommended to bake it with reel at 65-70 degrees for 24 hours before using for SMT again.

Copyright© Shenzhen Minewsemi Co., Ltd.
This manual and all the contents contained in it are owned by Shenzhen Minewsemi Co., Ltd. and are protected by Chinese laws and applicable international conventions related to copyright laws. The company has the right to change the content of this manual according to the technological development, and the revised version will not be notified otherwise. Without the written permission and authorization of the company, any individual, company, or organization shall not modify the contents of this manual or use part or all of the contents of this manual in other ways. Violators will be held accountable in accordance with the law.

12 Package Information

12.1 Package dimension

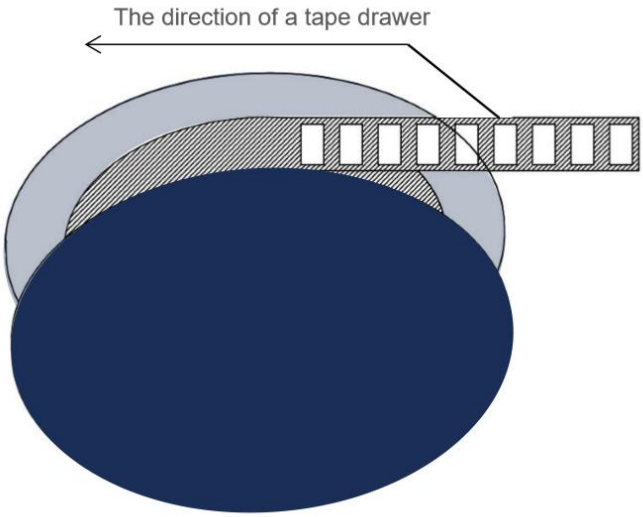

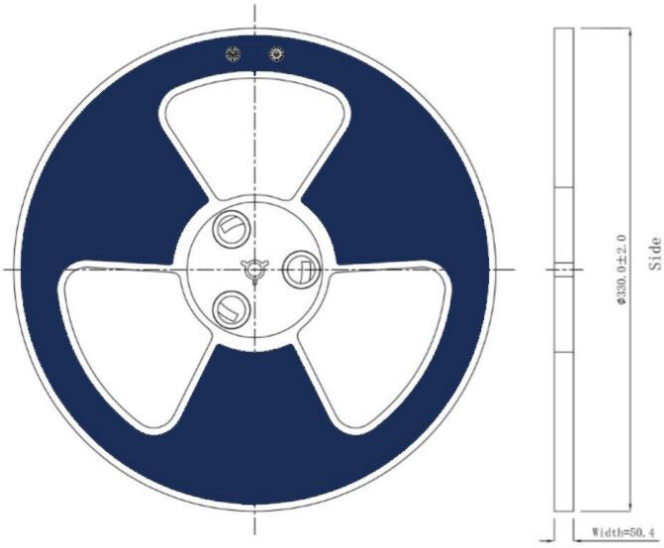

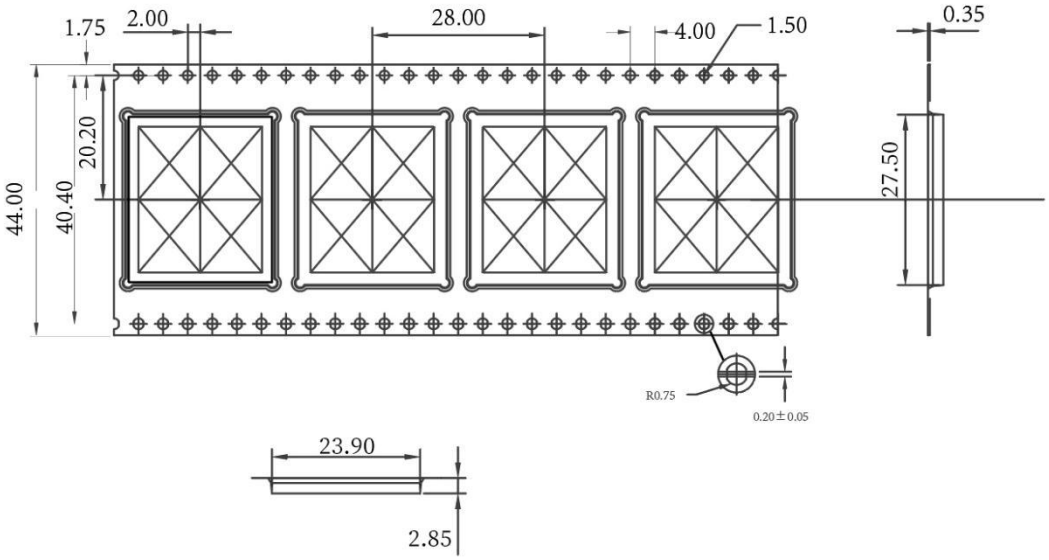

*（Unit：mm　Tolerance：±0.1）

Item	QTY	Net Weight	Gross Weight	Size
MS21SF1	700PCS	1960	2490	W=44mm,T=0.35mm

Notice： Default weight error within 10g.

Copyright© Shenzhen Minewsemi Co., Ltd.
This manual and all the contents contained in it are owned by Shenzhen Minewsemi Co., Ltd. and are protected by Chinese laws and applicable international conventions related to copyright laws. The company has the right to change the content of this manual according to the technological development, and the revised version will not be notified otherwise. Without the written permission and authorization of the company, any individual, company, or organization shall not modify the contents of this manual or use part or all of the contents of this manual in other ways. Violators will be held accountable in accordance with the law.

12.2 Part number description

Each module is with different code no. To devine whether with 32.768k or not, with on-board antenna or external antenna, the code no. will be marked on the metal shield, description as below：

Part No. in the first line		MS24SF1	Part No. in the second line	8Y40AI
MS24SF1	Model No			
8	Antenna Type		1	PCB Antenna
			2	Ceramic Antenna（Chip）
			3	IPEX Connector（1st Generation）
			8	PCB+IPEX Connector（1st Generation）
Y	32.768KHz		Y	With 32.768K Crystal Oscillaor
			N	Without 32.768K Crystal Oscillator
40	SoC		05	m1805,nRF52805
			33	nRF52833
			40	nRF52840,nRF5340
			C3	ESP32-C3FN4
			62	SX1262
A	SoC Package		A	=AA
			B	=AB
			C	=AC
I	RF Signal Output		I	internal
			E	external

Copyright© Shenzhen Minewsemi Co., Ltd.
This manual and all the contents contained in it are owned by Shenzhen Minewsemi Co., Ltd. and are protected by Chinese laws and applicable international conventions related to copyright laws. The company has the right to change the content of this manual according to the technological development, and the revised version will not be notified otherwise. Without the written permission and authorization of the company, any individual, company, or organization shall not modify the contents of this manual or use part or all of the contents of this manual in other ways. Violators will be held accountable in accordance with the law.

13 Quality Disclaimer

The factory has passed the ISO9001 quality management system, ISO14001 environmental management system and OAHS18001 occupational health and safety assessment . Each product has been rigorously tested (transmission power test, sensitivity test, power consumption test, stability test, aging test, etc.).

*** NOTICES:**

- All other trademarks listed herein are owned by their respective owners.
- All specifications are subject to change without notice.
- Please do not use this specification for produce, sell or illegal purpose without MinewSemi's authorization.
- MinewSemi have right to interpret all the items above.

14 Revision History

Version	Change	Contributor	Date	Notes
1.0	First edition	Vincle	2023.06.19	

Copyright© Shenzhen Minewsemi Co., Ltd.
This manual and all the contents contained in it are owned by Shenzhen Minewsemi Co., Ltd. and are protected by Chinese laws and applicable international conventions related to copyright laws. The company has the right to change the content of this manual according to the technological development, and the revised version will not be notified otherwise. Without the written permission and authorization of the company, any individual, company, or organization shall not modify the contents of this manual or use part or all of the contents of this manual in other ways. Violators will be held accountable in accordance with the law.

COPYRIGHT STATEMENT

This manual and all the contents contained in it are owned by Shenzhen Minewsemi Co., Ltd. and are protected by Chinese laws and applicable international conventions related to copyright laws.

The company has the right to change the content of this manual according to the technological development, and the revised version will not be notified otherwise. Without the written permission and authorization of the company, any individual, company, or organization shall not modify the contents of this manual or use part or all of the contents of this manual in other ways. Violators will be held accountable in accordance with the law.

Tel: 0086-755-2801 0353
Email: minewsemi@minew.com
URL: https://www.minewsemi.com/
Address: 3rd Floor, Building I, Gangzhilong Science Park, Qinglong RoadLonghua District, Shenzhen 518109, China

This manual and all the contents contained in it are owned by Shenzhen Minewsemi Co., Ltd. and are protected by Chinese laws and applicable international conventions related to copyright laws. The company has the right to change the content of this manual according to the technological development, and the revised version will not be notified otherwise. Without the written permission and authorization of the company, any individual, company, or organization shall not modify the contents of this manual or use part or all of the contents of this manual in other ways. Violators will be held accountable in accordance with the law.