MINEWSEMI

Bluetooth LE Module
MS51SF1

Datasheet

V 1.0.0

Copyright©
Shenzhen Minewsemi Co., Ltd.

Version Note

Version	Details	Contributor(s)	Date	Notes
1.0.0	First edit	Michelle, Leo	2024.05.10	

Part Number

Model	Hardware Code
MS51SF11	1N33AI

Click the icon to view and download the latest product documents electronically.
https://en.minewsemi.com/file/MS51SF1-nRF52833_Datasheet_K_EN.pdf

MS51SF1-nRF52833

Extremely small size, high performance, multi-protocol Bluetooth 5.4 module

The MS51SF1 is a very tiny BLE5.4 module base on highly flexible nRF52833 SoC. The strong 32-bit ARM CortexTM M4F CPU, 512kB Flash, 128kB RAM and integrated 2.4GH transceiver inside can provide wonderful solutions for bluetooth connecting. The chip nRF52833 is able to support ANT, BLE, BLE MESH, ZIGBEE and THREAD protocols, etc. What makes product work in environment with strict requirement on product is the tiny size of 9.8*8.4mm, PCB antenna, design of ANT pin connect external antenna.

FEATURES

- Bluetooth 5.4
- Extremely compact size: 9.8mm*8.4mm*2mm
- High Performance
- Support ANT, BLE, BLE MESH, ZIGBEE and THREAD protocols, etc.

KEY PARAMETER

MS51SF1-nRF52833			
Chip Model	nRF52833	**Antenna**	PCB
Module Size	9.8×8.4×2mm	**GPIO**	20
Flash	512KB	**RAM**	128KB
Receiving Sensitivity	-96dBm	**Transmission Power**	-40 ~ +8dBm
Current(TX)	0dBm-4.9mA	**Current(RX)**	4.6mA

APPLICATION

Smart Buildings

Consumer Electronics

Smart Healthcare

Smart Agriculture

Security Equipment

Automotive Equipment

 Copyright© Shenzhen Minewsemi Co., Ltd.

INDEX

1.Block Diagram ---------- 05
2.Electrical Specification ---------- 05
3.Pin Description ---------- 06
4.Pin Definition ---------- 06
5.Mechanical Drawing ---------- 06
6.Electrical Schematic ---------- 07
7.PCB Layout ---------- 08
8.Reflow and Soldering ---------- 08
9.Package Information ---------- 09
10.Storage Conditions ---------- 10
11.Handling Conditions ---------- 10
12.Quality ---------- 10
13.Copyright Statement ---------- 11
14.Related Documents ---------- 11

 Copyright© Shenzhen Minewsemi Co., Ltd.

1 BLOCK DIAGRAM

2 ELECTRICAL SPECIFICATION

Parameters	Value	Notes
Working Voltage	1.7V-3.6V	To ensure RF work, supply voltage suggest not lower than 2.3V
Working Temperature	-40℃~+85℃	Storage temperature is -40℃~+125℃
Transmission Power	-40 ~ +8dBm	Configurable
Current(RX)	4.6mA	RF receiving current under 1Mbps pattern
Current(TX)	4.8mA	RF transmission current under odB pattern
Module Dimension	9.8*8.4*2mm	
Quantity of IO Port	20	

 Copyright© Shenzhen Minewsemi Co., Ltd.

3 PIN DESCRIPTION

4 PIN DEFINITION

Pin Number	Symbol	Type	Definition
11	VDD	Power source	Power supply: 1.7V-3.6V, short-circuit VDD and VDDH to use the pin to supply power
10	VDDH	Power source	Power supply: 2.5V-5.5V, When supply 5V electricity, use this pin to supply power, not connect VDD pin
2/9/18/26/33-38	GND	Ground	Ground
3/28	SWCLK/SWDIO	Debug	Debug, when debug only need to connect power supply pin, ground and these 2 pins.
4-5/12-17/19-25 /27/29-32	P0.00-P0.30 P1.02-P1.08	I/O	I0 port for general purpose
8	VBUS	Power source for USB port	5V input current for USB 3.3V modulator Need to supply 5V current and short-circuit this pin with VDDH.
7	D+	Digital interface	USB D+
6	D-	Digital interface	USB D-

5 MECHANICAL DRAWING

Default unit: mm Default tolerance: ±0.15

Notice: The recommended pad size 0.5*0.4mm

 Copyright© Shenzhen Minewsemi Co., Ltd.

6 ELECTRICAL SCHEMATIC

Notice: Before placing an order, please confirm the specific configuration required with the salesperson.

Reference Design

 Copyright© Shenzhen Minewsemi Co., Ltd.

7 PCB LAYOUT

Module antenna area couldn't have GND plane or metal cross line, couldn't place components nearby. It is better to make hollow out or clearance treatment or place it on the edge of PCB board.

Notice: Refer to examples as below, and highly suggest to use the first design and the adjustment of modules antenna design according to the first wiring.

Layout Notes:

1) Preferred Module antenna area completely clearance and not be prevented by metals, otherwise it will influence antenna's effect (as above DWG. indication).
2) Cover the external part of module antenna area with copper as far as possible to reduce the main board's signal cable and other disturbing.
3) It is preferred to have a clearance area of 4 square meter or more area around the module antenna (including the shell) to reduce the influence to antenna.
4) Device should be grounded well to reduce the parasitic inductance.
5) Do not cover copper under module's antenna in order to avoid affect signal radiation or lead to transmission distance affected.
6) Antenna should keep far from other circuits to prevent radiation efficiency reduction or affects the normal operation of other lines.
7) Module should be placed on edge of circuit board and keep a distance away from other circuits.
8) Suggesting to use magnetic beads to insulate module's access power supply.

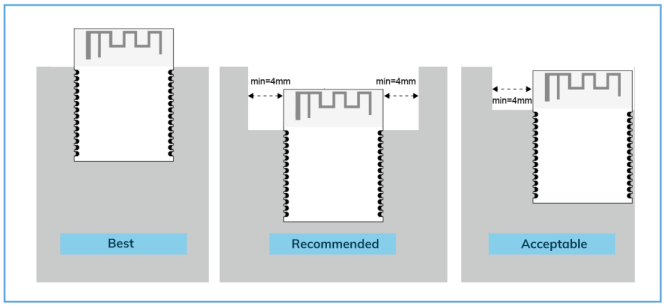

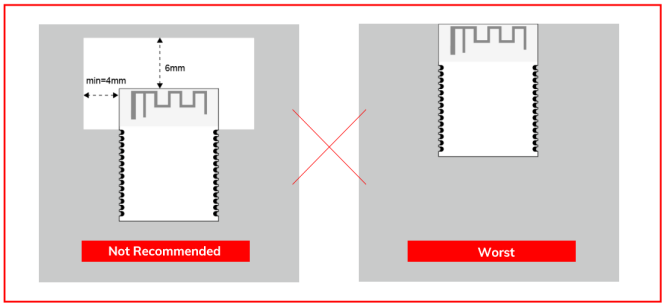

8 REFLOW AND SOLDERING

1) Do SMT according to above reflow oven temperature deal curve. Max. Temperature is 260℃;
Refer to IPC/JEDEC standard; Peak TEMP<260℃; Times: ≤2 times, suggest only do once reflow soldering on module surface in case of SMT double pad involved. Contact us if special crafts involved.

2) Suggesting to make 0.2mm thickness of module SMT for partial ladder steel mesh, then make the opening extend 0.8mm
3) After unsealing, it cannot be used up at one time, should be vacuumed for storage, couldn't be exposed in the air for long time. Please avoid getting damp and soldering-pan oxidizing. If there are 7 to 30 days interval before using online SMT, suggest to bake at 65-70 ℃ for 24 hours without disassembling the tape.
4) Before using SMT, please adopt ESD protection measure.

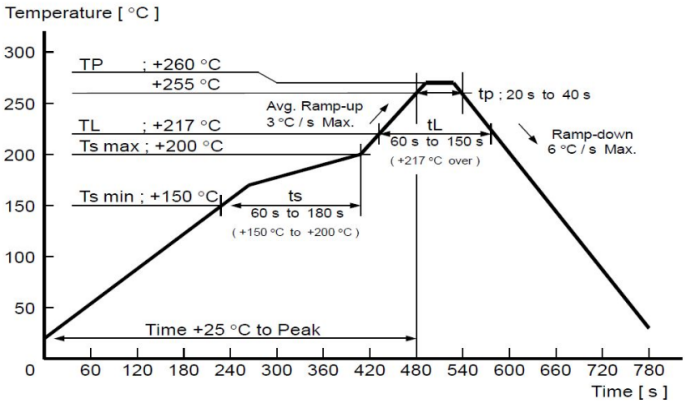

 Copyright© Shenzhen Minewsemi Co., Ltd.

9 PACKAGE INFORMATION

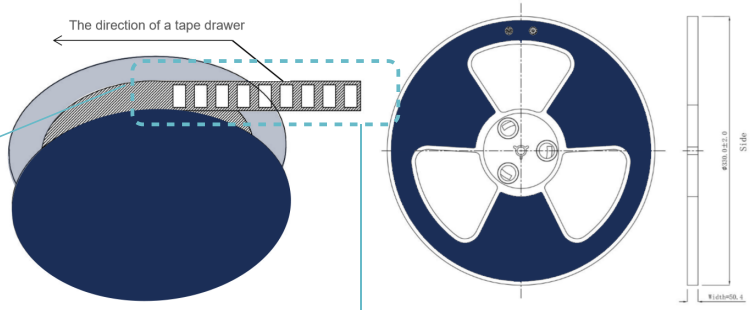

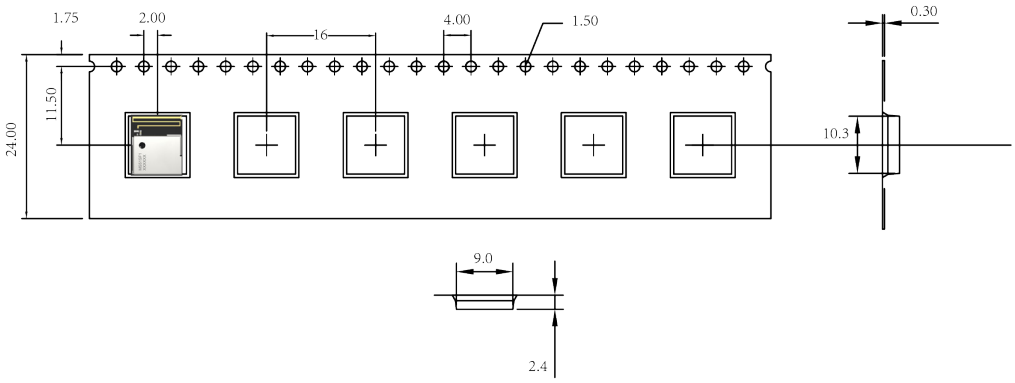

Inner carton(*8)
355*340*35mm，±5mm

Outer carton
370*358*350mm，±10mm

Remarks

General material list for FCL packaging:

Carrier tape packaging tray

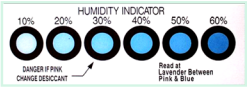

Humidity Indicator
(1 pcs/bag)

Desiccant
(placed in a vacuum bag)

Vacuum bag

Inner carton(*8)
355*340*35mm，±5mm

Outer carton
370*358*350mm，±10mm

Other:

Moisture-proof label (attached to the vacuum bag)

Certification label (attached to the vacuum bag)

Outer box label

Default unit：mm Default tolerance：±0.1

Packing detail	Specification	Net weight	Gross weight	Dimension
MS51SF1	1300PCS	338g	1135g	W=24mm，T=0.35mm

Note: Default weight tolerance all are within 10g（except the special notes）

 Copyright© Shenzhen Minewsemi Co., Ltd.

10 STORAGE CONDITIONS

- **Please use this product within 6 months after signing the receipt.**
  - This product should be stored without opening the package at an ambient temperature of 5~35°C and a humidity of 20~70%RH.
  - This product should be left for more than 6 months after receipt and should be confirmed before use.
  - The product must be stored in a non-corrosive gas (CI2, NH3, SO2, NOx, etc.).
  - To avoid damaging the packaging material, do not apply any excessive mechanical shocks, including but not limited to sharp objects adhering to the packaging material and product dropping.

- **This product is suitable for MSL2 (based on JEDEC standard J-STD-020).**
  - After opening the package, the product must be stored at ≤30°C/<60%RH. It is recommended to use the product within 3-6 months after opening the package.
  - When the color of the indicator in the package changes, the product should be baked before welding.

- **Baking is not required for one year if exposure is limited to <30°C and 60%RH. Refer to MSL2 for exposure criteria for moisture sensitivity level. If exposed to (≥168h@85°C/60%RH) conditions or stored for more than one year, recommended baking conditions.**
  1. 120 +5/-5°C, 8 hours, 1 time
  Products must be baked individually on heat-resistant trays because the materials (base tape, reel tape, and cover tape) are not heat-resistant, and the packaging material may be deformed at temperatures of 120℃;
  2、90℃ +8/-0℃，24hours，1times
  The base tape can be baked together with the product at this temperature. Please pay attention to the uniformity of heat.

11 HANDLING CONDITIONS

- Be careful in handling or transporting products because excessive stress or mechanical shock may break products.
- Handle with care if products may have cracks or damages on their terminals. If there is any such damage, the characteristics of products may change. Do not touch products with bare hands that may result in poor solder ability and destroy by static electrical charge.

12 QUALITY

Cognizant of our commitment to quality, we operate our own factory equipped with state-of-the-art production facilities and a meticulous quality management system. We hold certifications for ISO9001, ISO14001, ISO27001, OHSA18001, BSCI.

Every product undergoes stringent testing, including transmit power, sensitivity, power consumption, stability, and aging tests. Our fully automated module production line is now in full operation, boasting a production capacity in the millions, capable of meeting high-volume production demands.

 Copyright© Shenzhen Minewsemi Co., Ltd.

13 COPYRIGHT STATEMENT

This manual and all the contents contained in it are owned by Shenzhen Minewsemi Co., Ltd. and are protected by Chinese laws and applicable international conventions related to copyright laws.

The certified trademarks included in this product and related documents have been licensed for use by MinewSemi. This includes but is not limited to certifications such as BQB, RoHS, REACH, CE, FCC, BQB, IC, SRRC, TELEC, WPC, RCM, WEEE, etc. The respective textual trademarks and logos belong to their respective owners. For example, the Bluetooth® textual trademark and logo are owned by Bluetooth SIG, Inc. Other trademarks and trade names are those of their respective owners. Due to the small size of the module product, the "®" symbol is omitted from the Bluetooth Primary Trademarks information in compliance with regulations.

The company has the right to change the content of this manual according to the technological development, and the revised version will not be notified otherwise. Without the written permission and authorization of the company, any individual, company, or organization shall not modify the contents of this manual or use part or all of the contents of this manual in other ways. Violators will be held accountable in accordance with the law.

14 RELATED DOCUMENTS

- nRF52833_Chip_Datasheet
  https://en.minewsemi.com/file/nRF52833_Chip_Datasheet_EN.pdf
- MinewSemi_Product_Naming_Reference_Manual_V1.0
  https://en.minewsemi.com/file/MinewSemi_Product_Naming_Reference_Manual_EN.pdf
- MinewSemi_Connectivity_Module_Catalogue_V2.0
  https://en.minewsemi.com/file/MinewSemi_Connectivity_Module_Catalogue_EN.pdf

For product change notifications and regular updates of Minewsemi documentation, please register on our website: **www.minewsemi.com**

MINEWSEMI

SHENZHEN MINEWSEMI CO., LTD.

0086-755-2801 0353
https://minewsemi.com
minewsemi@minew.com
https://store.minewsemi.com
No.8, Qinglong Road, Longhua District, Shenzhen, China

This device complies with part 15 of the FCC Rules. Operation is subject to the following two conditions: (1) This device may not cause harmful interference, and (2) this device must accept any interference received, including interference that may cause undesired operation.

FCC warning:
Any Changes or modifications not expressly approved by the party responsible for compliance could void the user's authority to operate the equipment.

Note: This equipment has been tested and found to comply with the limits for a Class B digital device, pursuant to part 15 of the FCC Rules. These limits are designed to provide reasonable protection against harmful interference in a residential installation. This equipment generates uses and can radiate radio frequency energy and, if not installed and used in accordance with the instructions, may cause harmful interference to radio communications. However, there is no guarantee that interference will not occur in a particular installation. If this equipment does cause harmful interference to radio or television reception, which can be determined by turning the equipment off and on, the user is encouraged to try to correct the interference by one or more of the following measures:

-Reorient or relocate the receiving antenna.
-Increase the separation between the equipment and receiver.
-Connect the equipment into an outlet on a circuit different from that to which the receiver is connected.
-Consult the dealer or an experienced radio/TV technician for help.

This equipment complies with FCC radiation exposure limits set forth for an uncontrolled environment. This equipment should be installed and operated with minimum distance 20cm between the radiator & your body.

Requirement per KDB996369 D03
2.2 List of applicable FCC rules
List the FCC rules that are applicable to the modular transmitter. These are the rules that specifically establish the bands of operation, the power, spurious emissions, and operating fundamental frequencies. DO NOT list compliance to unintentional-radiator rules (Part 15 Subpart B) since that is not a condition of a module grant that is extended to a host manufacturer. See also Section 2.10 below concerning the need to notify host manufacturers that further testing is required.3
Explanation: This module meets the requirements of FCC part 15C(15.247).
2.3 Summarize the specific operational use conditions
Describe use conditions that are applicable to the modular transmitter, including for example any limits on antennas, etc. For example, if point-to-point antennas are used that require reduction in power or compensation for cable loss, then this information must be in the instructions. If the use condition limitations extend to professional users, then instructions must state that this information also extends to the host manufacturer' s instruction manual. In addition, certain information may also be needed, such as peak gain per frequency band and minimum gain, specifically for master devices in 5 GHz DFS bands.
Explanation: The EUT has a PCB Antenna, , and the antenna use a permanently attached antenna which is not replaceable.
2.4 Limited module procedures
If a modular transmitter is approved as a "limited module," then the module manufacturer is responsible for approving the host environment that the limited module is used with. The manufacturer of a limited module must describe, both in the filing and in the installation instructions, the alternative means that the limited module manufacturer uses to verify that the host meets the necessary requirements to satisfy the module limiting conditions.
A limited module manufacturer has the flexibility to define its alternative method to address the conditions that limit the initial approval, such as: shielding, minimum signaling amplitude, buffered modulation/data inputs, or power supply regulation. The alternative method could include that the limited module manufacturer reviews detailed test data or host designs prior to giving the host manufacturer approval.
This limited module procedure is also applicable for RF exposure evaluation when it is necessary to demonstrate compliance in a specific host. The module manufacturer must state how control of the product into which the modular transmitter will be installed will be maintained such that full compliance of the product is always ensured. For additional hosts other than the specific host originally granted with a limited module, a Class II permissive change is required on the module grant to register the additional host as a specific host also approved with the module.
Explanation: The module is not a limited module.

2.5 Trace antenna designs

For a modular transmitter with trace antenna designs, see the guidance in Question 11 of KDB Publication 996369 D02 FAQ – Modules for Micro-Strip Antennas and traces. The integration information shall include for the TCB review the integration instructions for the following aspects: layout of trace design, parts list (BOM), antenna, connectors, and isolation requirements.

a) Information that includes permitted variances (e.g., trace boundary limits, thickness, length, width, shape(s), dielectric constant, and impedance as applicable for each type of antenna);
b) Each design shall be considered a different type (e.g., antenna length in multiple(s) of frequency, the wavelength, and antenna shape (traces in phase) can affect antenna gain and must be considered);
c) The parameters shall be provided in a manner permitting host manufacturers to design the printed circuit (PC) board layout;
d) Appropriate parts by manufacturer and specifications;
e) Test procedures for design verification; and
f) Production test procedures for ensuring compliance.

The module grantee shall provide a notice that any deviation(s) from the defined parameters of the antenna trace, as described by the instructions, require that the host product manufacturer must notify
the module grantee that they wish to change the antenna trace design. In this case, a Class II permissive change application is required to be filed by the grantee, or the host manufacturer can take responsibility through the change in FCC ID (new application) procedure followed by a Class II permissive change application.
Explanation: Yes, The module with trace antenna designs, and This manual has been shown the layout
of trace design,, antenna, connectors, and isolation requirements.

2.6 RF exposure considerations

It is essential for module grantees to clearly and explicitly state the RF exposure conditions that permit a host product manufacturer to use the module. Two types of instructions are required for RF exposure information: (1) to the host product manufacturer, to define the application conditions (mobile, portable – xx cm from a person's body); and (2) additional text needed for the host product manufacturer to provide to end users in their end-product manuals. If RF exposure statements and use conditions are not provided, then the host product manufacturer is required to take responsibility of the module through a change in FCC ID (new application).

Explanation: This module complies with FCC RF radiation exposure limits set forth for an uncontrolled environment, This equipment should be installed and operated with a minimum distance of 20 centimeters between the radiator and your body." This module is designed to comply with the FCC statement, FCC ID is:2BDJ6-MS51SF1.

2.7 Antennas

A list of antennas included in the application for certification must be provided in the instructions. For modular transmitters approved as limited modules, all applicable professional installer instructions must be included as part of the information to the host product manufacturer. The antenna list shall also identify the antenna types (monopole, PIFA, dipole, etc. (note that for example an "omni-directional antenna" is not considered to be a specific "antenna type")).

For situations where the host product manufacturer is responsible for an external connector, for example with an RF pin and antenna trace design, the integration instructions shall inform the installer that unique antenna connector must be used on the Part 15 authorized transmitters used in the host product. The module manufacturers shall provide a list of acceptable unique connectors. Explanation: The EUT has a PCB Antenna, , and the antenna use a permanently attached antenna which is unique.

2.8 Label and compliance information

Grantees are responsible for the continued compliance of their modules to the FCC rules. This includes advising host product manufacturers that they need to provide a physical or e-label stating "Contains FCC ID" with their finished product. See Guidelines for Labeling and User Information for RF Devices – KDB Publication 784748.

Explanation:The host system using this module, should have label in a visible area indicated the following texts: "Contains FCC ID: 2BDJ6-MS51SF1.

2.9 Information on test modes and additional testing requirements5

Additional guidance for testing host products is given in KDB Publication 996369 D04 Module Integration Guide. Test modes should take into consideration different operational conditions for a stand-alone modular transmitter in a host, as well as for multiple simultaneously transmitting modules or other transmitters in a host product.

The grantee should provide information on how to configure test modes for host product evaluation for different operational conditions for a stand-alone modular transmitter in a host, versus with multiple, simultaneously transmitting modules or other transmitters in a host.

Grantees can increase the utility of their modular transmitters by providing special means, modes, or instructions that simulates or characterizes a connection by enabling a transmitter. This can greatly simplify a host manufacturer's determination that a module as installed in a host complies with FCC requirements.

Explanation: Topband can increase the utility of our modular transmitters by providing instructions that simulates or characterizes a connection by enabling a transmitter.