Product Overview

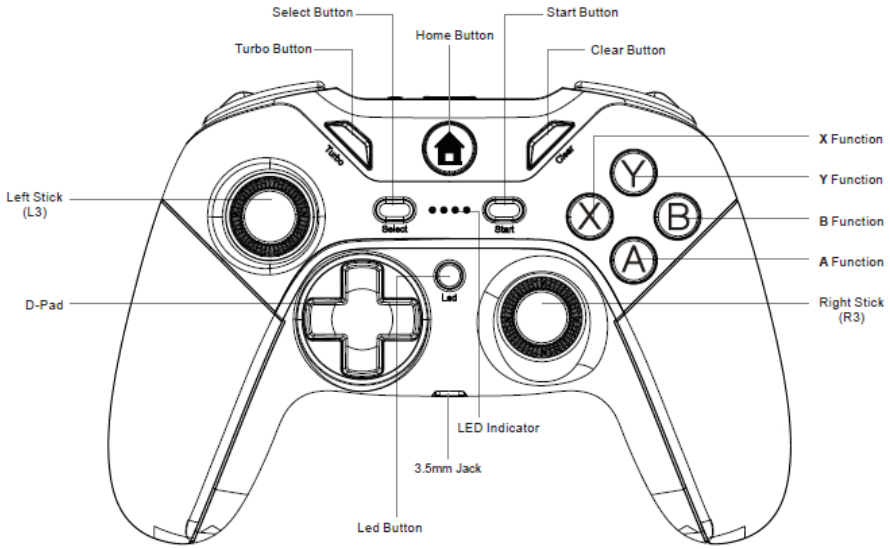

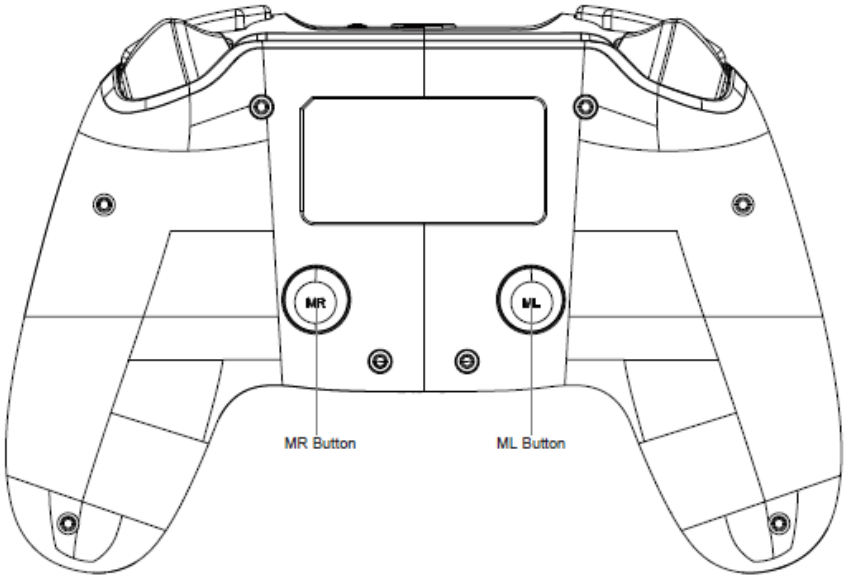

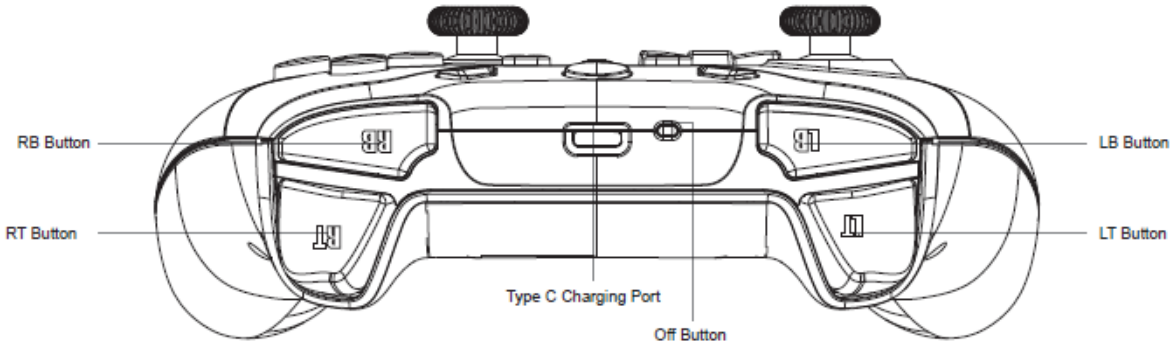

Technical Specifications

Input Voltage: 5V, 350mA
Working Voltage: 3.7V
Battery Capacity: 600mAh
Product Size: 154*59*111mm
Product Weight: 250±10g
Product Material: ABS

Package Included

1 x Gamepad

1 x User Manual
1 x Type-C Charging Cable

Wireless Connection

Please Note: Please make sure that airplane mode on the console is turned off before use.

First-Time Pairing:

Step 1: Find Controllers Option

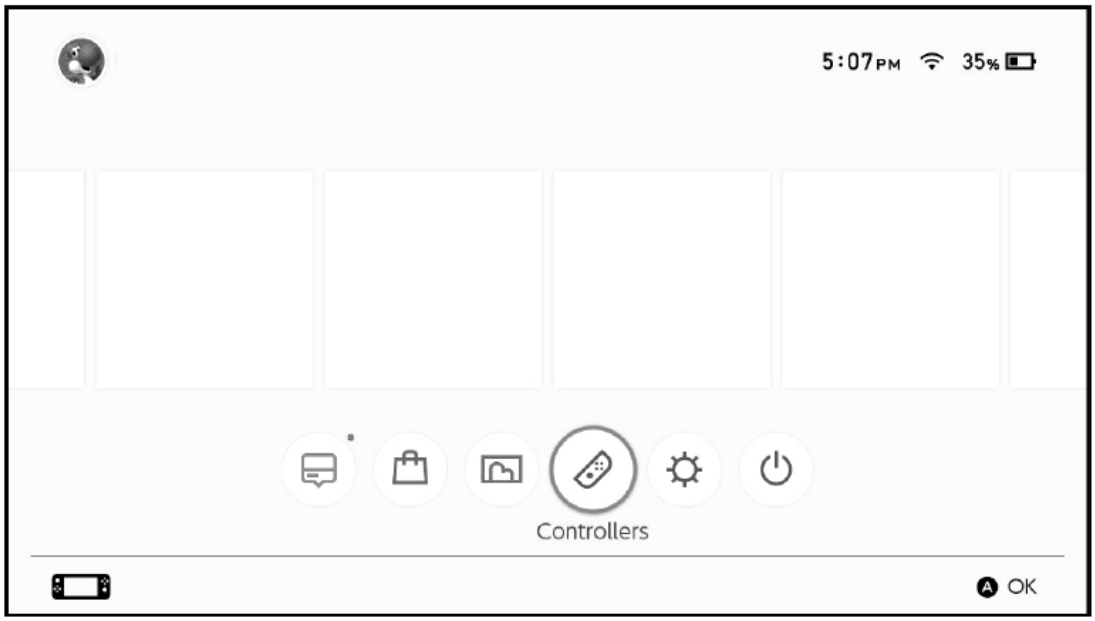

Step 2: Click Change Grip/Order

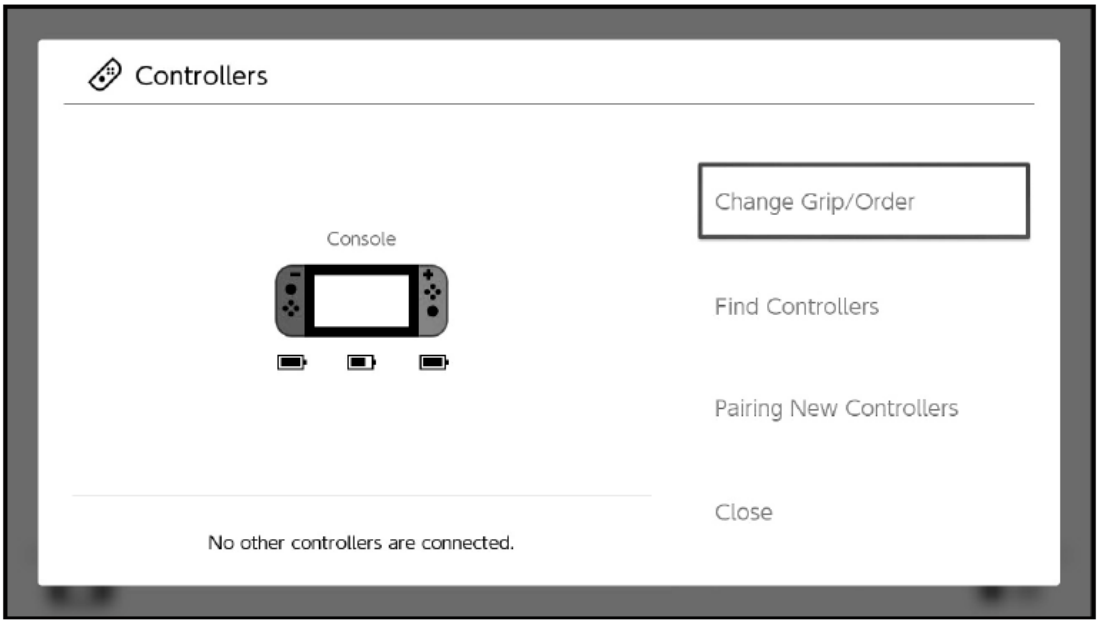

Step 3: Press the SYNC Button (on the back of the controller) for about 5 seconds, until the 4 Led

lights flash quickly, then release your finger and wait for the connection to complete.

*** NOTE**: Enter the Change Grip/Order page, please complete the connection within 30 seconds as soon as possible. If you stay on this page for too long, you may not be able to connect to the switch console

Console Wake Up and Wireless Re-connection

Once the controller has paired with the console:
. If the console is in SLEEP mode, the HOME button on the controller is able to wake up both the controller and the console.

. If the console screen is on, any button can wake up the controller, which will allow the controller to reconnect to the console.

. If re-connection failed, please follow the three steps:
1.Turn off Airplane mode on the console
2.Remove the controller's information on the NS console (System Setting> Controllers and Sensors> Disconnect Controllers)
3.Follow the steps in First-Time Pairing

Wired Connection

1. Turn on the "Pro Controller Wired Communication" in the console: System Settings > Controllers and Sensors > Pro Controller Wired Communication>On

Please Note: The "Pro Controller Wired Communication" must be turned on before connecting the controller and the Dock with the cable.

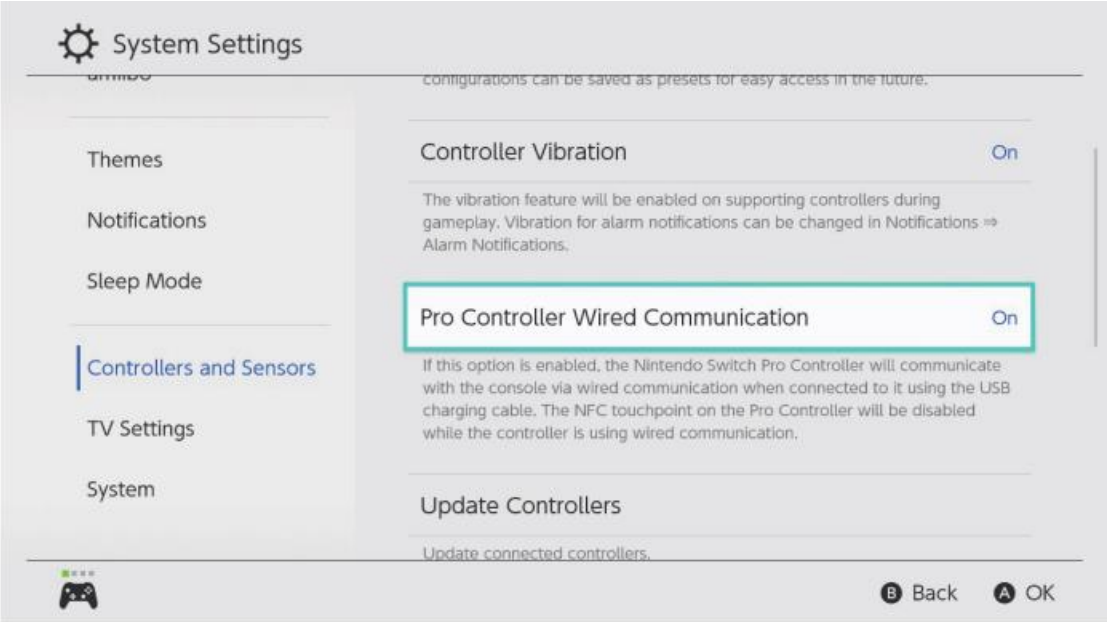

2. Set the Switch on the dock to activate TV mode. Connect the Switch Dock and the controller directly via the USB Type C cable.

Audio Function

The controller has a 3.5mm audio port, supports 3.5mm wired headset and microphone.
Please note: The audio function will ONLY work in Wired Connection Mode with a NS console.
It will not work in wireless connection or PC platform.

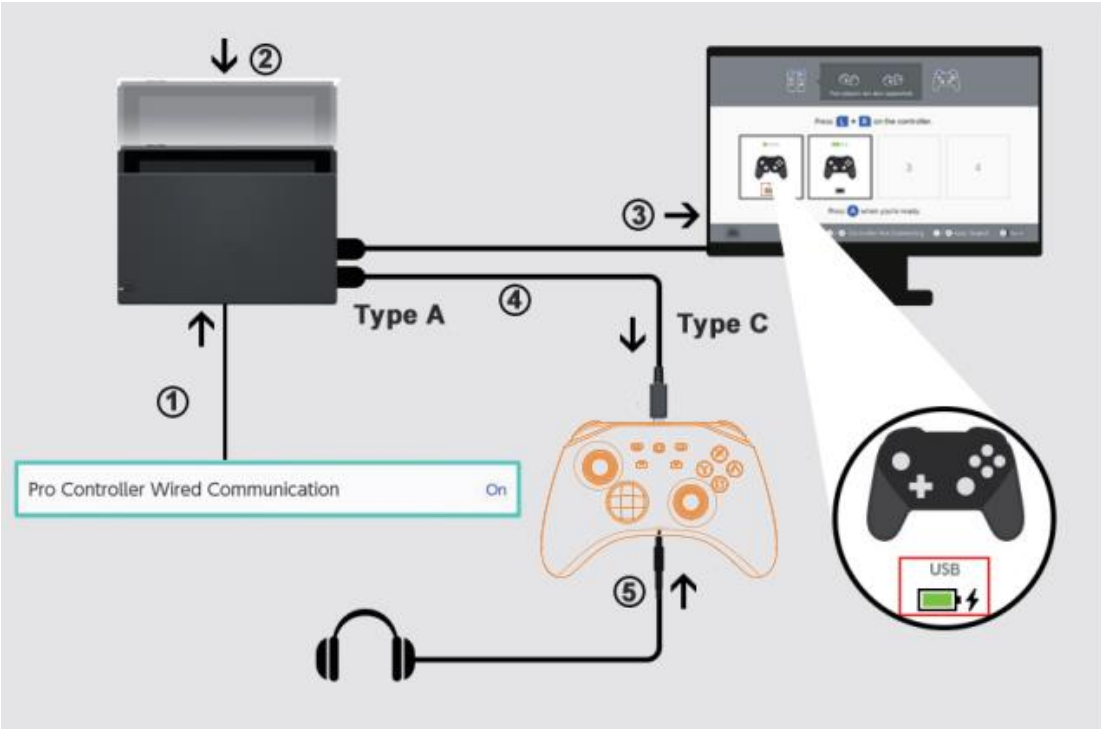

Please Note: The "Pro Controller Wired Communication" must be turned on BEFORE connecting the controller and the Dock with the cable.

① System settings > Controllers and Sensors > Pro Controller Wired Communication > On
② Set the Switch console on the dock to TV mode.
③ Connect the Switch Dock and the controller with the USB cable.
④ The icon with "USB" displayed indicates the wired connection is successful.
⑤ Plug the 3.5mm audio jack into the audio port on the bottom of the controller.

Turbo and Auto-Fire

Buttons Available to Set the Turbo Function: A/B/X/Y/L/ZL/R/ZR button

Enable/disable the manual and auto turbo speed function:
Step1: Press the TURBO button and one of the function button simultaneously, to enable the manual turbo speed function.
Step2: Repeat the step 1, to enable the auto turbo speed function
Step3: Repeat the step 1 again, to disable the manual and auto turbo speed function of this button.

There are 3 levels of turbo speed:
Minimum 5 shoots per-second, the corresponding channel light flash slowly.
Moderate 12 shoots per-second, the corresponding channel light flash at a moderate rate.
Maximum 20 shoots per-second, the corresponding channel light flash quickly.

How to increase the turbo speed:
When the manual turbo function is on, upward the right joystick meanwhile press and hold the TURBO button, which can increase one level of turbo speed.

How to decrease the turbo speed:

When the manual turbo function is on, downward the right joystick meanwhile press and hold the TURBO button, which can decrease one level of turbo speed.

Turn Off All the Turbo Functions for All Buttons: Press and hold the Turbo button for 6 seconds until the controller vibrates, which will turn off the turbo functions of all buttons.

Adjust Vibration Intensity

There are 4 levels of vibration intensity: 100%-70%-30%-0%(no vibration)

How to increase the vibration intensity:
upward the left joystick meanwhile press the TURBO button, which can increase one level of vibration intensity.

How to decrease the vibration intensity:
downward the left joystick meanwhile press the TURBO button, which can decrease one level of

vibration intensity.

Macro Function

There are two macro-enabled programmable buttons "ML/MR" on the back of the controller. Macro buttons can be programmed into function buttons or button sequences respectively.

Macro Buttons Can Be Programmed to: A/B/X/Y/L/ZL/R/ZR/up/down/left/right buttons.
The default mapping buttons of ML&MR are A&B.

Enter the Macro Definition Mode and Set Up the Button(s):

1.Press and hold the "Turbo" + "ML" / "MR" together for 2 seconds, LED2-LED3 will stay lighting. The controller is ready to record the macro setting.
2.Press the function buttons that need to be set sequentially, the controller will record the button with the time interval between each button pressed.
3.Press macro button ML or MR shortly to save, the corresponding player LED light will stay lighting. The macro definition setting has been saved. When the controller re-connects to the console, it will automatically apply the last macro definition setting.

Clear the Macro Definition Settings:

Press the "Turbo" + "ML"/"MR" together for 2 seconds to enter settings mode, the LED2-LED3 will stay lit, then directly exit setting mode by pressing the same ML/MR buttons. The corresponding player LED will light up again. The macro definition setting within the current slot will be removed.

RGB Lights ON/OFF

Turn on/off ABXY button lights: Hold down the "L1+L2" together for 6 seconds
Turn on/off Joystick lights: Hold down the "ZL+ZR" together for 6 seconds

RGB Brightness Settings

Hold the "-" then press the Up of the D-Pad to increase the light brightness
Hold the "-" then press the Down of the D-Pad to decrease the light brightness

Color Breathing Mode

The color automatically breathes and changes every second following the color breathing sequence: Green→Yellow→Red→ Purple→Blue→Cyan→Warm White (for Touro) or Cool White (for Zero-Kirin)

Single Color Mode

Steady single color: Hold the "+" then press the Right of D-pad to switch to the next steady color within the Single Color Mode.

Joystick Operation RGB Mode

Hold the"-" then press the Left of D-pad to enter the Joystick Operation RGB Mode, the joystick RGB lights will light up following the moving direction of the joystick and will be off if the joystick has no movements.
The RGB Color Mode is still adjustable when the Joystick Operation RGB Mode is on.
Please make sure the Joystick lights are active before trying to enter the Joystick Operation RGB Mode (Hold down the "ZL+ZR" together for 6 seconds to switch on/off the joystick lights)

Connect With Windows PC

PC Xbox Wired Connection (X-INPUT)

Connect the controller to a Windows system computer with a USB cable, it will automatically be recognized as "Xbox 360" mode.
The first and the fourth LED lights (LED1 and LED4) will have a steady light and they will flash when the controller is charging.

PC Xbox Wireless Connection

Press the "Sync" and "X" buttons together for 3 seconds, the first and fourth lights (LED1 and LED4) will flash.
Turn on your PC's Bluetooth and select the device: Xbox Wireless Controller.
The first and the fourth lights (LED1 and LED4) will have a steady light after a successful connection.
Please Note: In the Xbox mode, button "A" becomes "B", "B" becomes "A", "X" becomes "Y", and "Y" becomes "X".

STEAM Xbox Mode Connection
We can connect with the STEAM platform via Xbox wired and wireless modes above.

STEAM Switch Pro Controller Wired Connection
1.Press down the right joystick vertically and connect the controller to the computer with the USB cable. The first LED (LED1) will have a steady light and it will flash when the controller is charging. (Note: Please press the joystick vertically when plugging in the USB cable to avoid causing the joystick drifting issue; In case of the drifting, please try moving the joysticks in circle to let it reconcile)
2.It will be recognized on Steam as a Pro controller and can be used for supported games.

STEAM Switch Pro Controller Mode Wireless Connection
1. Press the "Sync" pairing button and the four lights will all flash in turn.
2. Turn on your PC's Bluetooth and select the device "Pro Controller".
3. The first LED (LED1) will have a steady light after a successful connection.

Connect With IOS Devices
*Compatible with IOS 13.4 above devices

Press the "Sync" and "X" buttons together for 3 seconds, and the first and fourth lights (LED1 and LED4) will flash.
Turn on your Mobile's Bluetooth and select the device: Xbox Wireless Controller.
The first and the fourth LEDs will have a steady light after the successful connection.

Connect With Android Devices

*Compatible with Android 10.0 above devices
Press the "Sync" and "Y" buttons together for 3 seconds, and the second and third lights (LED 2 and LED3) will flash.
Turn on your Mobile's Bluetooth and select the device: Xbox Wireless Controller.
The second and third LED lights (LED 2 and LED3) will have a steady light after the successful connection.

Functions Comparison

Platform	Screenshot	Audio Function	Motion	Vibration	Macro	Turbo
Switch Wireless	✓	×	✓	✓	✓	✓
Switch Wired	✓	✓	✓	✓	✓	✓
PC Xbox (X-INPUT)	×	×	×	✓	✓	✓
PC STEAM (Pro Controller)	✓	*	✓	✓	✓	✓
Android (Mytrix-M01)	×	×	×	✓	✓	✓
IOS (Xbox Wireless Controller)	×	×	×	✓	✓	✓

Charging Instructions

The controller can be charged using the Switch charger, the Switch Dock, 5V 2A power adapter, or USB power supplies with the USB Type C to A cable.

- If the controller is connected with the console while charging, the corresponding channel LED light(s) on the controller will flash. The channel LED light(s) will stay lit if the controller has been fully charged.
- If the controller is not connected with the console while charging, the 4 LED lights will flash. The LED lights will go off when the controller has been fully charged.

When the battery is low, the corresponding channel LED light(s) will flash; the controller will turn off and need to be charged if the battery is exhausted.

FCC Caution：

This device complies with part 15 of the FCC Rules. Operation is subject to the following two conditions: (1) This device may not cause harmful interference, and (2) this device must accept any interference received, including interference that may cause undesired operation.

Any Changes or modifications not expressly approved by the party responsible for compliance could void the user's authority to operate the equipment.

Note: This equipment has been tested and found to comply with the limits for a Class B digital device, pursuant to part 15 of the FCC Rules. These limits are designed to provide reasonable protection against harmful interference in a residential installation. This equipment generates uses and can radiate radio frequency energy and, if not installed and used in accordance with the instructions, may cause harmful interference to radio communications. However, there is no guarantee that interference will not occur in a particular installation. If this equipment does cause harmful interference to radio or television reception, which can be determined by turning the equipment off and on, the user is encouraged to try to correct the interference by one or more of the following measures:

- Reorient or relocate the receiving antenna.
- Increase the separation between the equipment and receiver.
- Connect the equipment into an outlet on a circuit different from that to which the receiver is connected.
- Consult the dealer or an experienced radio/TV technician for help.

The device has been evaluated to meet general RF exposure requirement. The device can be used in portable exposure condition without restriction.