中认信通
CHINA CERTIFICATION ICT CO., LTD (DONGGUAN)

ACCREDITED
TESTING LABORATORY
CERTIFICATE # 6356.01

TEST REPORT

Applicant: **HELLOBABY TECHNOLOGY (HK) LIMITED**

Address: FT 3, 12/F, BLK B, VERISTRONG IND CTR, 34-36 AU PUI WAN STREET, FO TAN, SHA TIN, NT, Hong Kong

FCC ID: **2BDJU-2688R**

Product Name: **Digital Cordless Telephone**

Standard(s): **FCC PART 15D**
ANSI C63.17-2013

The above device has been tested and found compliant with the requirement of the relative standards by China Certification ICT Co., Ltd (Dongguan)

Report Number: **CR231063785-00**

Date Of Issue: **2023/12/6**

Reviewed By: **Calvin Chen**

Title: RF Engineer

Reviewed By: **Sun Zhong**

Title: Manager

Test Laboratory: **China Certification ICT Co., Ltd (Dongguan)**
No. 113, Pingkang Road, Dalang Town, Dongguan, Guangdong, China
Tel: +86-769-82016888

Test Facility

The Test site used by China Certification ICT Co., Ltd (Dongguan) to collect test data is located on the No. 113, Pingkang Road, Dalang Town, Dongguan, Guangdong, China.

The lab has been recognized as the FCC accredited lab under the KDB 974614 D01 and is listed in the FCC Public Access Link (PAL) database, FCC Registration No. : 442868, the FCC Designation No. : CN1314.

The lab has been recognized by Innovation, Science and Economic Development Canada to test to Canadian radio equipment requirements, the CAB identifier: CN0123.

Declarations

China Certification ICT Co., Ltd (Dongguan) is not responsible for the authenticity of any test data provided by the applicant. Data included from the applicant that may affect test results are marked with a triangle symbol "▲". Customer model name, addresses, names, trademarks etc. are not considered data.

Unless otherwise stated the results shown in this test report refer only to the sample(s) tested.

This report cannot be reproduced except in full, without prior written approval of the Company.

This report is valid only with a valid digital signature. The digital signature may be available only under the Adobe software above version 7.0.

This report may contain data that are not covered by the accreditation scope and shall be marked with an asterisk "★".

CONTENTS

DOCUMENT REVISION HISTORY 5
1. GENERAL INFORMATION 6
1.1 PRODUCT DESCRIPTION FOR EQUIPMENT UNDER TEST (EUT) 6
1.2 DESCRIPTION OF TEST CONFIGURATION 7
1.2.1 EUT Operation Condition: 7
1.2.2 Support Equipment List and Details 7
1.2.3 Support Cable List and Details 7
1.2.4 Block Diagram of Test Setup 8
1.3 MEASUREMENT UNCERTAINTY 9
2. SUMMARY OF TEST RESULTS 10
3. REQUIREMENTS AND TEST PROCEDURES 11
3.1 CONDUCTED EMISSIONS 11
3.1.1 Applicable Standard 11
3.1.2 EUT Setup 11
3.1.3 EMI Test Receiver Setup 11
3.1.4 Test Procedure 12
3.1.5 Corrected Amplitude & Margin Calculation 12
3.2 EMISSION BANDWIDTH: 13
3.2.1 Applicable Standard 13
3.2.2 EUT Setup 13
3.2.3 Test Procedure 13
3.3 PEAK TRANSMIT POWER: 14
3.3.1 Applicable Standard 14
3.3.2 EUT Setup 14
3.3.3 Test Procedure 14
3.4 POWER SPECTRAL DENSITY: 15
3.4.1 Applicable Standard 15
3.4.2 EUT Setup 15
3.4.3 Test Procedure 15
3.5 EMISSION INSIDE AND OUTSIDE THE SUB-BAND: 17
3.5.1 Applicable Standard 17
3.5.2 EUT Setup 17
3.5.3 Test Procedure 17
3.6 FREQUENCY STABILITY: 19
3.6.1 Applicable Standard 19
3.6.2 EUT Setup 19
3.6.3 Test Procedure 19
3.7 SPECIFIC REQUIREMENTS FOR UPCS DEVICE: 20
3.7.1 Applicable Standard 20
3.7.2 EUT Setup 22
3.7.3 Test Procedure 22

4. Test DATA AND RESULTS 24
4.1 CONDUCTED EMISSIONS 24
4.2 EMISSION BANDWIDTH: 27
4.3 PEAK TRANSMIT POWER: 30
4.4 POWER SPECTRAL DENSITY: 32
4.5 EMISSION INSIDE AND OUTSIDE THE SUB-BAND: 36
4.6 FREQUENCY STABILITY: 44
4.7 SPECIFIC REQUIREMENTS FOR UPCS DEVICE: 45
5. EUT PHOTOGRAPHS 50
6. TEST SETUP PHOTOGRAPHS 51

DOCUMENT REVISION HISTORY

Revision Number	Report Number	Description of Revision	Date of Revision
1.0	CR231063785-00	Original Report	2023/12/6

1. GENERAL INFORMATION

1.1 Product Description for Equipment under Test (EUT)

EUT Name:	Digital Cordless Telephone
Trade Name:	HelloBaby
EUT Model:	HB2688
Multiple Model(s):	HB2688-2, HB2688-3, HB2688-4, HB2688RX, HB2688TX
Operation Frequency:	1921.536-1928.448 MHz
Maximum Peak Output Power (Conducted):	15.27dBm
Modulation Type:	GFSK
Rated Input Voltage:	DC 6V from adapter and 1.2*2V from battery
Serial Number:	RF: 2AWL-8 CE: 2AWL-9
EUT Received Date:	2023/11/1
EUT Received Status:	Good
Note: The Multiple models are electrically identical with the test model. Please refer to the declaration letter for more detail, which was provided by manufacturer.	

Antenna Information Detail▲:

Antenna Type	input impedance (Ohm)	Frequency Range	Antenna Gain
Monopole	50	1.92~1.93GHz	4.21 dBi

The Method of §15.203 Compliance:

☒Antenna was permanently attached to the unit.

☐Antenna use a unique type of connector to attach to the EUT.

☐Unit was professionally installed, and installer shall be responsible for verifying that the correct antenna is employed with the unit.

Accessory Information:

Accessory Description	Manufacturer	Model	Parameters
Adapter	SHENZHEN BAIJUNDA ELECTRONIC CO.LTD	AT-332A-060045A	Input: AC 100-240V, 50/60Hz, 0.2A MAX Output: DC 6.0V, 0.45A, 2.7W

1.2 Description of Test Configuration

1.2.1 **EUT** Operation Condition:

EUT Operation Mode:	The system was configured for testing in Engineering Mode, which was provided by the manufacturer.
Equipment Modifications:	No
EUT Exercise Software:	No
The engineering mode was provided by manufacturer. The maximum power was configured as below, that was provided by the manufacturer▲:	

1.2.2 Support Equipment List and Details

Manufacturer	Description	Model	Serial Number
R&S	Digital Radio communication Tester	CMD 60M	846956/010

1.2.3 Support Cable List and Details

Cable Description	Shielding Type	Ferrite Core	Length (m)	From Port	To
/	/	/	/	/	/

1.2.4 Block Diagram of Test Setup

AC line conducted emissions:

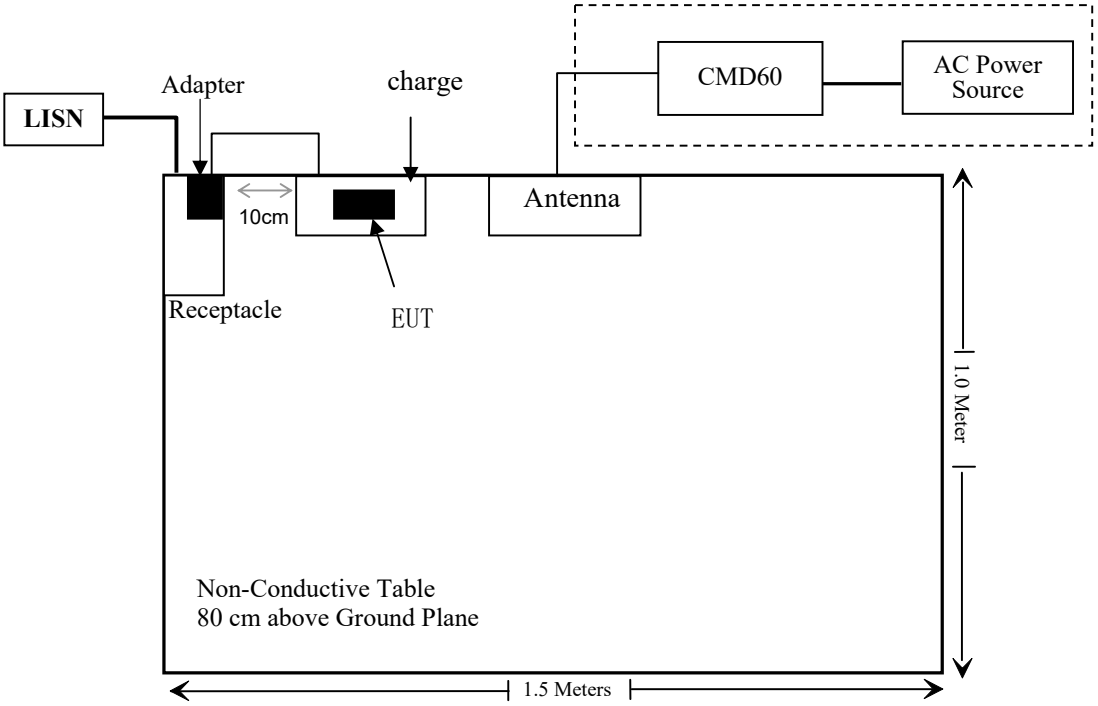

1.3 Measurement Uncertainty

Otherwise required by the applicant or Product Regulations, Decision Rule in this report did not consider the uncertainty. The extended uncertainty given in this report is obtained by combining the standard uncertainty times the coverage factor K with the 95% confidence interval.

Parameter	Measurement Uncertainty
Occupied Channel Bandwidth	±5 %
RF output power, conducted	±0.61dB
Power Spectral Density, conducted	±0.61 dB
Unwanted Emissions, radiated	30M~200MHz: 4.15 dB,200M~1GHz: 5.61 dB,1G~6GHz: 5.14 dB, 6G~18GHz: 5.93 dB,18G~26.5G:5.47 dB,26.5G~40G:5.63 dB
Unwanted Emissions, conducted	±1.26 dB
Temperature	±1℃
Humidity	±5%
DC and low frequency voltages	±0.4%
Duty Cycle	1%
AC Power Lines Conducted Emission	2.8 dB (150 kHz to 30 MHz)

2. SUMMARY OF TEST RESULTS

Standard(s) Section	Test Items	Result
FCC § 15.315, § 15.207	Conducted Emission	Compliant
FCC § 15.323 (a)	Emission Bandwidth	Compliant
FCC § 15.319 (c) FCC § 15.319 (e)	Peak Transmit Power	Compliant
FCC § 15.319 (d)	Power Spectral Density	Compliant
FCC § 15.323 (d)	Emission Inside and Outside the sub-band	Compliant
FCC § 15.323 (f)	Frequency Stability	Compliant
FCC § 15.323 (c)(e) & § 15.319 (f)	Specific Requirements for UPCS	Compliant
FCC § 15.319 (g)	Radiated Emission	Not Applicable
FCC § 15.317, § 15.203	Antenna Requirement	Compliant

Not Applicable: EUT is compliance with §15.323 (d)

3. REQUIREMENTS AND TEST PROCEDURES

3.1 Conducted Emissions

3.1.1 Applicable Standard

FCC§15.315
An unlicensed PCS device that is designed to be connected to the public utility (AC) power line must meet the limits specified in §15.207.

3.1.2 EUT Setup

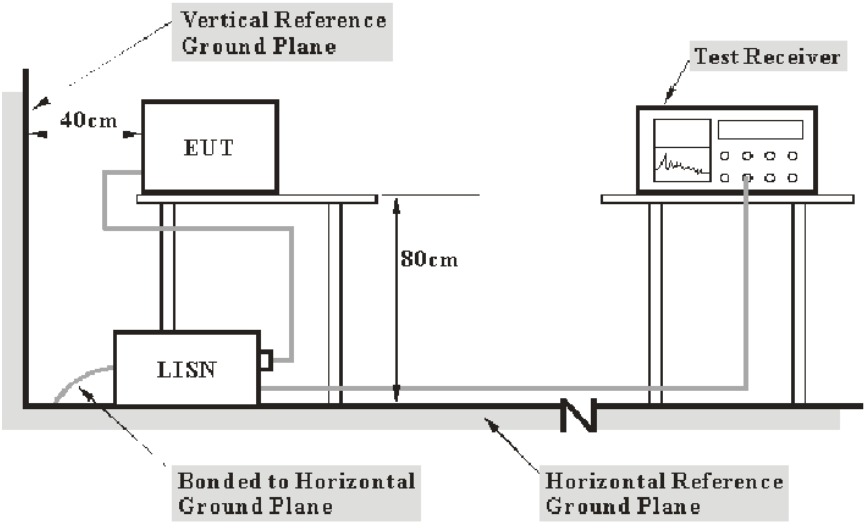

Note: 1. Support units were connected to second LISN.
2. Both of LISNs (AMN) 80 cm from EUT and at the least 80 cm from other units and other metal planes support units.

The setup of EUT is according with per ANSI C63.10-2013 measurement procedure. The specification used was with the FCC 15.315, FCC 15.207 limits.

The spacing between the peripherals was 10 cm.

The adapter or EUT was connected to the main LISN with a 120 V/60 Hz AC power source.

3.1.3 EMI Test Receiver Setup

The EMI test receiver was set to investigate the spectrum from 150 kHz to 30 MHz.

During the conducted emission test, the EMI test receiver was set with the following configurations:

Frequency Range	IF B/W
150 kHz – 30 MHz	9 kHz

3.1.4 Test Procedure

The frequency and amplitude of the six highest ac power-line conducted emissions relative to the limit, measured over all the current-carrying conductors of the EUT power cords, and the operating frequency or frequency to which the EUT is tuned (if appropriate), should be reported, unless such emissions are more than 20 dB below the limit. AC power-line conducted emissions measurements are to be separately carried out only on each of the phase ("hot") line(s) and (if used) on the neutral line(s), but not on the ground [protective earth] line(s). If less than six emission frequencies are within 20 dB of the limit, then the noise level of the measuring instrument at representative frequencies should be reported. The specific conductor of the power-line cord for each of the reported emissions should be identified. Measure the six highest emissions with respect to the limit on each current-carrying conductor of each power cord associated with the EUT (but not the power cords of associated or peripheral equipment that are part of the test configuration). Then, report the six highest emissions with respect to the limit from among all the measurements identifying the frequency and specific current-carrying conductor identified with the emission. The six highest emissions should be reported for each of the current-carrying conductors, or the six highest emissions may be reported over all the current-carrying conductors.

3.1.5 Corrected Amplitude & Margin Calculation

The basic equation is as follows:

Result = Reading + Factor
Factor = attenuation caused by cable loss + voltage division factor of AMN

The "**Margin**" column of the following data tables indicates the degree of compliance within the applicable limit. The equation for margin calculation is as follows:

Margin = Limit – Result

3.2 Emission Bandwidth:

3.2.1 Applicable Standard

FCC §15.323 (a)

Operation shall be contained within the 1920–1930 MHz band. The emission bandwidth shall be less then 2.5 MHz and greater than 50 kHz.

3.2.2 EUT Setup

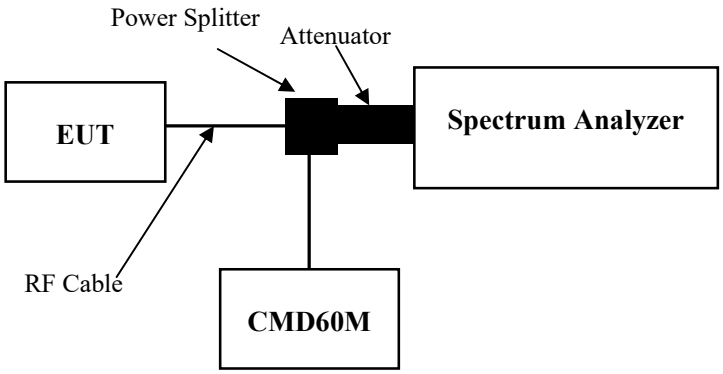

3.2.3 Test Procedure

According to ANSI C63.17-2013 Section 6.1.3

Table 3—Spectrum analyzer settings for measurement of emissions bandwidth *B*

RBW	Approximately 1% of the emission bandwidth (a rough estimate may be obtained from peak power level measurement, or use manufacturer's declared value)
Video bandwidth	≥ 3 × the RBW
Center frequency	Nominal center frequency of channel
Span	≥ 2 × the expected emission bandwidth
Sweep time	Coupled to frequency span and RBW
Amplitude scale	Log
Detection	Peak detection with maximum hold enabled

Record the maximum level of the modulated carrier. Find the two furthest frequencies above and below the frequency of the maximum level of the modulated carrier where the signal level is 26 dB below the peak level of the carrier. The difference in frequency between these two frequencies is the emission bandwidth.

If after measuring the emission bandwidth, it is found that the RBW used was not approximately 1% of the emission bandwidth, then adjust the RBW and repeat the procedure until the correct RBW is used. If the spectrum analyzer has fixed values of RBW, the one that is the nearest to 1% of the emission bandwidth is acceptable, provided it is no less than 0.5% of the emission bandwidth and no greater than 2% of the emission bandwidth.

3.3 Peak Transmit Power:

3.3.1 Applicable Standard

FCC §15.319 (c)
Peak transmit power shall not exceed 100 microwatts multiplied by the square root of the emission bandwidth in hertz. Peak transmit power must be measured over any interval of continuous transmission using instrumentation calibrated in terms of an rms-equivalent voltage. The measurement results shall be properly adjusted for any instrument limitations, such as detector response times, limited resolution bandwidth capability when compared to the emission bandwidth, sensitivity, etc., so as to obtain a true peak measurement for the emission in question over the full bandwidth of the channel.

FCC §15.319 (e)
The peak transmit power shall be reduced by the amount in decibels that the maximum directional gain of the antenna exceeds 3 dBi.

3.3.2 EUT Setup

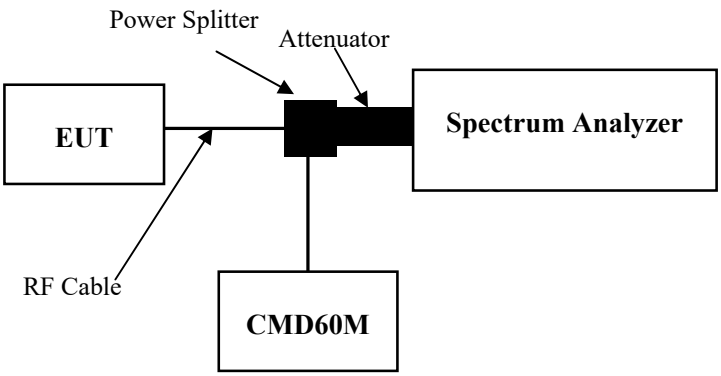

3.3.3 Test Procedure

According to ANSI C63.17-2013 Section 6.1.2

The resolution bandwidth (RBW) setting for this test must be adjusted by repeating this test and using increasing values of the RBW until there are negligible changes (within ± 0.5 dB) in the measured values of the maximum power.

Table 2—Spectrum analyzer settings for determining the peak power

RBW	≥ Emission bandwidth
Video bandwidth	≥ RBW
Span	Zero
Center frequency	Nominal center frequency of transmit carrier
Amplitude scale	Log (linear may be used if analyzer has sufficient linear dynamic range and accuracy)
Detection	Peak detection
Trigger	Video
Sweep rate	Sufficiently rapid to permit the transmit pulse to be resolved accurately

3.4 Power Spectral Density:

3.4.1 Applicable Standard

FCC §15.319 (d)
Power spectral density shall not exceed 3 milliwatts in any 3 kHz bandwidth as measured with a spectrum analyzer having a resolution bandwidth of 3 kHz.

3.4.2 EUT Setup

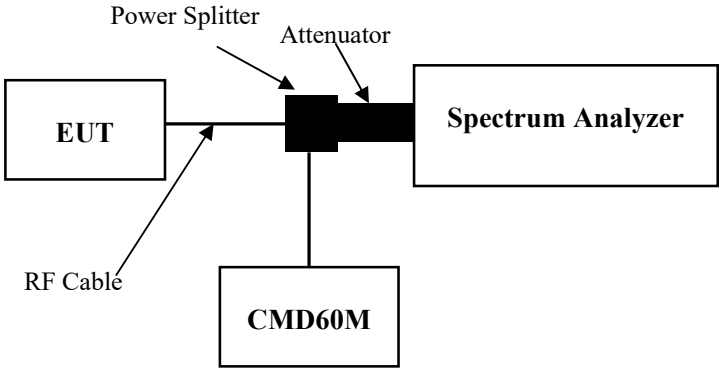

3.4.3 Test Procedure

According to ANSI C63.17-2013 Section 6.1.5

The EUT transmit data sequence and mode of operation shall be representative of that encountered in normal operation, so that transient effects associated with transmission bursts or data content are captured by the PSD measurement.

Table 4—Spectrum analyzer settings for finding of the maximum of PSD_{EUT}

RBW	3 kHz
Video bandwidth	≥ 3 × RBW
Span	Zero span at frequency with the maximum level (frequency determined in 6.1.3 if the same type of signal (continuous versus burst) was used in 6.1.3)
Center frequency	Spectral peak as determined in 6.1.3
Sweep time	For burst signals, sufficient to include essentially all of the maximum length burst at the output of a 3 kHz filter (e.g., maximum input burst duration plus 600 μs). For continuous signals, 20 ms.
Amplitude scale	Log power
Detection	Sample detection and averaged for a minimum of 100 sweeps
Trigger	External or internal

For burst-type signals, arrange to measure the wideband burst duration of each burst analyzed and compute the mean duration.

Determine the level that is 20 dB below the first peak. Record the power-averaged waveform between the 20 dB threshold levels around the first peak with at least 30 000 samples per second as shown in Figure 4. Multiple wideband bursts may produce the waveform between −20 dB peaks; these must be included in the determination of the average burst length. If there is no level that is 20 dB below the peak, then analyze the complete sweep and include all of the wideband waveform that occurs during the sweep time in the computation of average burst length.

Sum the values of the sample points (in linear units of power) and divide by the sample frequency to obtain the total pulse energy in the 3 kHz bandwidth, then divide by the average duration of the wideband input pulse to obtain the average pulse power.

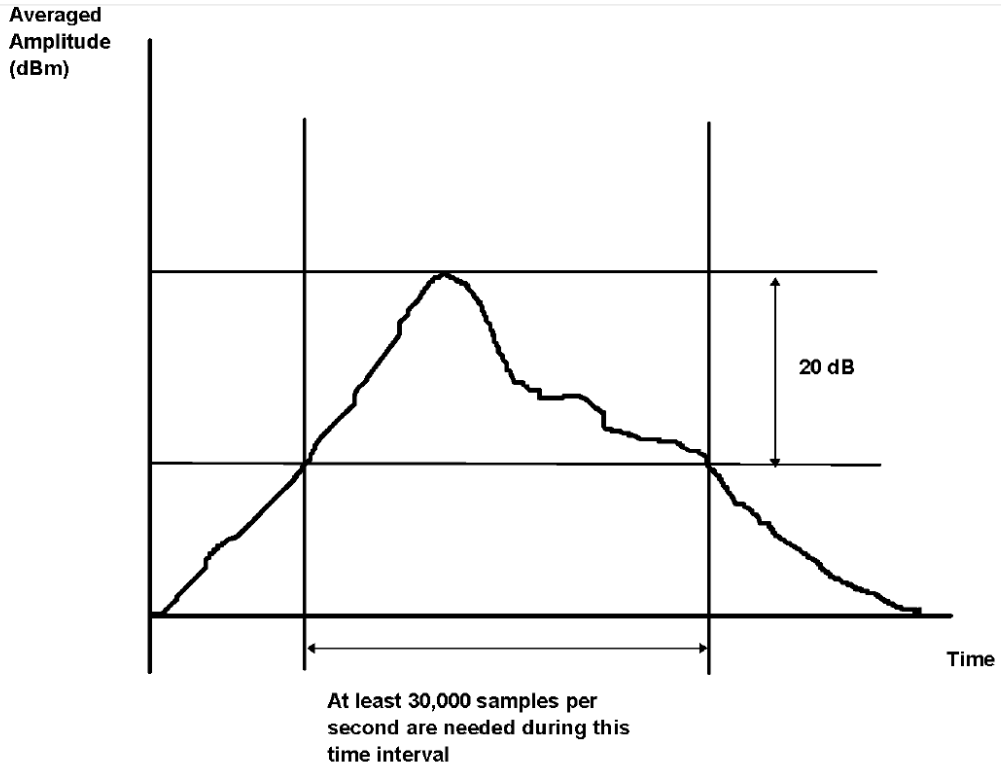

Figure 4—Computed average transient method: Sampling of the averaged power waveform measured with 3 kHz RBW

3.5 Emission Inside and Outside the Sub-band:

3.5.1 Applicable Standard

FCC §15.323 (d)
Emissions outside the band shall be attenuated below a reference power of 112 milliwatts as follows: 30 dB between the band and 1.25 MHz above or below the band; 50 dB between 1.25 and 2.5 MHz above or below the band; and 60 dB at 2.5 MHz or greater above or below the band. Emissions inside the band must comply with the following emission mask: In the bands between 1B and 2B measured from the center of the emission bandwidth the total power emitted by the device shall be at least 30 dB below the transmit power permitted for that device; in the bands between 2B and 3B measured from the center of the emission bandwidth the total power emitted by an intentional radiator shall be at least 50 dB below the transmit power permitted for that radiator; in the bands between 3B and the band edge the total power emitted by an intentional radiator in the measurement bandwidth shall be at least 60 dB below the transmit power permitted for that radiator. B" is defined as the emission bandwidth of the device in hertz. Compliance with the emission limits is based on the use of measurement instrumentation employing peak detector function with an instrument resolution bandwidth approximately equal to 1.0 percent of the emission bandwidth of the device under measurement.

3.5.2 EUT Setup

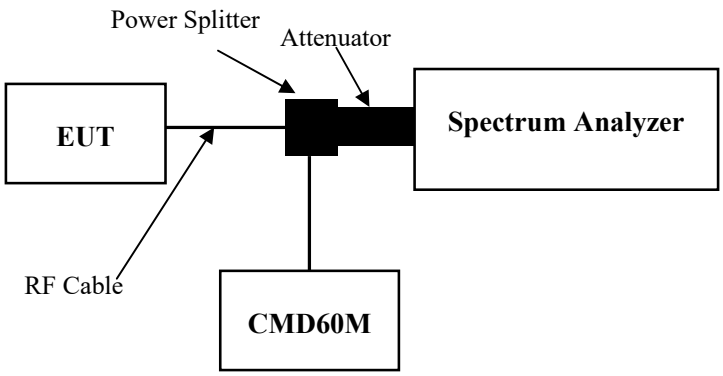

3.5.3 Test Procedure

According to ANSI C63.17-2013 Section 6.1.6

In-band emission:

In the region between 1B and 2B from the center of the RF carrier, the measured emission level (measured with 1% of emission bandwidth) shall not exceed 30 dB below the permitted peak power for the EUT.

In the region between 2B and 3B from the center of the RF carrier, the measured emission level shall not exceed 50 dB below the permitted peak power for the EUT.

Table 5—Spectrum analyzer settings for measuring in-band emissions

RBW	Approximately 1% of the emission bandwidth (*B*)
Video bandwidth	3 × RBW
Sweep time	The sweep time shall be sufficiently slow that the swept frequency rate shall not exceed one RBW per three transmit bursts.
Number of sweeps	Sufficient to stabilize the trace
Amplitude scale	Log
Detection	Peak detection and max hold enabled
Span	Approximately equal to 3.5 *B*

In the region between 3B and the UPCS band edge, as measured from the center of the RF carrier, the measured emission level shall not exceed 60 dB below the permitted peak power for the EUT.

Out-band emission:

Out-of-band tests shall be performed with the RF carrier set to the lowest and highest carriers defined by the EUT. The spectrum analyzer settings for in-band unwanted emissions in 6.1.6.1 also apply to out-of-band emissions. The EUT shall pass the tests of item a), item b), and either item c) or item d), as follows:

a) In the region between the band edges and 1.25 MHz below and above the lower and the upper band edges, respectively, the measured emission level shall not exceed −9.5 dBm.

b) In the region between 1.25 and 2.5 MHz below and above the lower and the upper band edges, respectively, the measured emission level shall not exceed −29.5 dBm.

c) In the region at 2.5 MHz or greater below and above the lower and upper band edges, respectively, the measured emission level shall not exceed −39.5 dBm.

d) In the region at 2.5 MHz or greater below and above the lower and upper band edges, respectively, the measured emission level shall not exceed the limits of 47CFR15.209. Measurement shall be made as a radiated test.

UPCS devices, in general, include digital circuitry not directly associated with the radio transmitter and are subject to the requirements for unintentional radiators as described in 47CFR15.109, for both in-band and out-of-band emissions. These emissions shall be measured with the EUT operating in receive and transmit modes. For the transmit mode, do not measure within 3.75 MHz or 3B, whichever is the largest, of the edges of the band. Emissions that are directly caused by digital circuits in the transmit path do not have to meet 47CFR15.109 limits, but shall meet those limits as mentioned in the preceding list.

3.6 Frequency Stability:

3.6.1 Applicable Standard

FCC §15.323(f)
The frequency stability of the carrier frequency of the intentional radiator shall be maintained within ±10 ppm over 1 hour or the interval between channel access monitoring, whichever is shorter. The frequency stability shall be maintained over a temperature variation of −20° to + 50 °C at normal supply voltage, and over a variation in the primary supply voltage of 85 percent to 115 percent of the rated supply voltage at a temperature of 20 °C. For equipment that is capable only of operating from a battery, the frequency stability tests shall be performed using a new battery without any further requirement to vary supply voltage.

3.6.2 EUT Setup

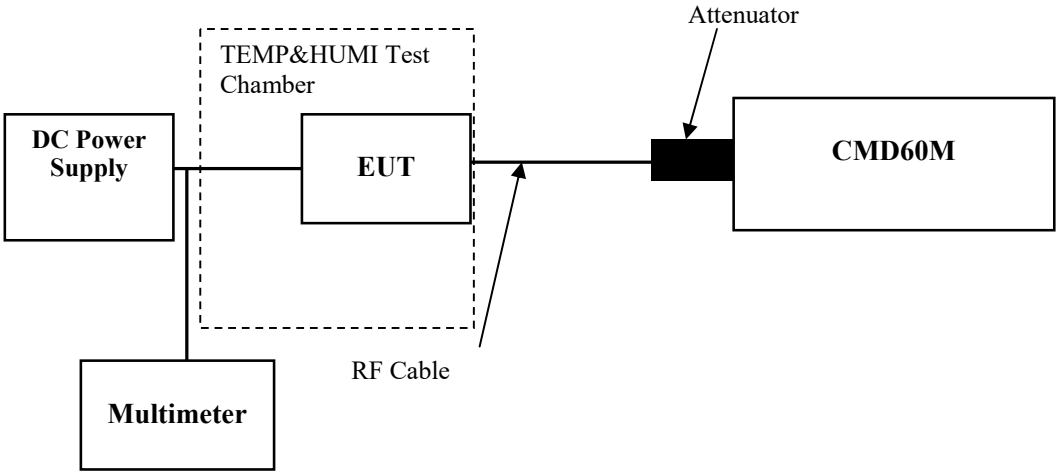

3.6.3 Test Procedure

According to ANSI C63.17-2013 Section 6.2.1.2

This test does not apply to an EUT that is capable only of operating from a battery. For a mains-powered EUT, the mean value of the carrier frequency shall be measured at the power supply voltage extremes of row 1 of Table 7.

Table 7—Test parameters for carrier-frequency stability testing

Temperature	Supply voltage
20 °C ± 2 °C	85% to 115% of declared nominal voltage
−20 °C ± 2 °C	All declared nominal(s)
+50 °C ± 2 °C	All declared nominal(s)

During test, the equipment shall be placed in the boxes and set the temperature to the specified requirement until the thermal balance has been reached.

3.7 Specific Requirements For UPCS Device:

3.7.1 Applicable Standard

FCC §15.319(f)
The device shall automatically discontinue transmission in case of either absence of information to transmit or operational failure. The provisions in this section are not intended to preclude transmission of control and signaling information or use of repetitive codes used by certain digital technologies to complete frame or burst intervals.

FCC §15.323(c)
Devices must incorporate a mechanism for monitoring the time and spectrum windows that its transmission is intended to occupy. The following criteria must be met:

(1) Immediately prior to initiating transmission, devices must monitor the combined time and spectrum windows in which they intend to transmit for a period of at least 10 milliseconds for systems designed to use a 10 milliseconds or shorter frame period or at least 20 milliseconds for systems designed to use a 20 milliseconds frame period.

(2) The monitoring threshold must not be more than 30 dB above the thermal noise power for a bandwidth equivalent to the emission bandwidth used by the device.

(3) If no signal above the threshold level is detected, transmission may commence and continue with the same emission bandwidth in the monitored time and spectrum windows without further monitoring. However, occupation of the same combined time and spectrum windows by a device or group of cooperating devices continuously over a period of time longer than 8 hours is not permitted without repeating the access criteria.

(4) Once access to specific combined time and spectrum windows is obtained an acknowledgment from a system participant must be received by the initiating transmitter within one second or transmission must cease. Periodic acknowledgments must be received at least every 30 seconds or transmission must cease. Channels used exclusively for control and signaling information may transmit continuously for 30 seconds without receiving an acknowledgment, at which time the access criteria must be repeated.

(5) If access to spectrum is not available as determined by the above, and a minimum of 20 duplex system access channels are defined for the system, the time and spectrum windows with the lowest power level may be accessed. A device utilizing the provisions of this paragraph must have monitored all access channels defined for its system within the last 10 seconds and must verify, within the 20 milliseconds (40 milliseconds for devices designed to use a 20 milliseconds frame period) immediately preceding actual channel access that the detected power of the selected time and spectrum windows is no higher than the previously detected value. The power measurement resolution for this comparison must be accurate to within 6 dB. No device or group of co-operating devices located within 1 meter of each other shall during any frame period occupy more than 6 MHz of aggregate bandwidth, or alternatively, more than one third of the time and spectrum windows defined by the system.

(6) If the selected combined time and spectrum windows are unavailable, the device may either monitor and select different windows or seek to use the same windows after waiting an amount of time, randomly chosen from a uniform random distribution between 10 and 150 milliseconds, commencing when the channel becomes available.

(7) The monitoring system bandwidth must be equal to or greater than the emission bandwidth of the intended transmission and have a maximum reaction time less than 50xSQRT (1.25/emission bandwidth in MHz) microseconds for signals at the applicable threshold level but shall not be required to be less than 50 microseconds. If a signal is detected that is 6 dB or more above the applicable threshold level, the maximum reaction time shall be 35xSQRT (1.25/emission bandwidth in MHz) microseconds but shall not be required to be less than 35 microseconds.

(8) The monitoring system shall use the same antenna used for transmission, or an antenna that yields equivalent reception at that location.

(9) Devices that have a power output lower than the maximum permitted under this subpart may increase their monitoring detection threshold by one decibel for each one decibel that the transmitter power is below the maximum permitted.

(10) An initiating device may attempt to establish a duplex connection by monitoring both its intended transmit and receive time and spectrum windows. If both the intended transmit and receive time and spectrum windows meet the access criteria, then the initiating device can initiate a transmission in the intended transmit time and spectrum window. If the power detected by the responding device can be decoded as a duplex connection signal from the initiating device, then the responding device may immediately begin transmitting on the receive time and spectrum window monitored by the initiating device.

(11) An initiating device that is prevented from monitoring during its intended transmit window due to monitoring system blocking from the transmissions of a co-located (within one meter) transmitter of the same system, may monitor the portions of the time and spectrum windows in which they intend to receive over a period of at least 10 milliseconds. The monitored time and spectrum window must total at least 50 percent of the 10 millisecond frame interval and the monitored spectrum must be within 1.25 MHz of the center frequency of channel(s) already occupied by that device or co-located co-operating devices. If the access criteria is met for the intended receive time and spectrum window under the above conditions, then transmission in the intended transmit window by the initiating device may commence.

(12) The provisions of (c)(10) or (c)(11) of this section shall not be used to extend the range of spectrum occupied over space or time for the purpose of denying fair access to spectrum to other devices.
ANSI C63.17 2013 §6.2 Frequency and time stability and §7.Monitoring tests and §8.Time and spectrum window access procedure.

FCC §15.323(e)
The frame period (a set of consecutive time slots in which the position of each time slot can be identified by reference to a synchronizing source) of an intentional radiator operating in this band shall be 20 milliseconds or 10 milliseconds/X where X is a positive whole number. Each device that implements time division for the purposes of maintaining a duplex connection on a given frequency carrier shall maintain a frame repetition rate with a frequency stability of at least 50 parts per million (ppm). Each device which further divides access in time in order to support multiple communication links on a given frequency carrier shall maintain a frame repetition rate with a frequency stability of at least 10 ppm. The jitter (time-related, abrupt, spurious variations in the duration of the frame interval) introduced at the two ends of such a communication link shall not exceed 25 microseconds for any two consecutive transmissions. Transmissions shall be continuous in every time and spectrum window during the frame period defined for the device.

3.7.2 EUT Setup

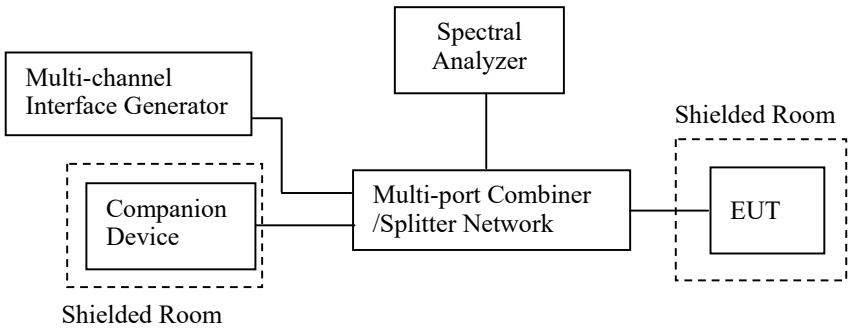

3.7.3 Test Procedure

1) Monitoring Time

According to ANSI C63.17- 2013 Section 7.3.3

2) Lower Monitoring Threshold

According to ANSI C63.17- 2013 Section 7.3.1

3) Maximum Transmit Period

According to ANSI C63.17- 2013 Section 8.2.2

4) System Acknowledgement

According to ANSI C63.17- 2013 Section 8.1, 8.2

5) Least Interfered Channel (LIC)

According to ANSI C63.17- 2013 Section 7.3.2, 7.3.3

6) Random waiting

According to ANSI C63.17- 2013 Section 8.1.2 or 8.1.3

7) Monitoring Bandwidth and Reaction Time

According to ANSI C63.17- 2013 Section 7.4, 7.5

8) Monitoring Antenna

According to ANSI C63.17- 2013 Section 4

9) Monitoring threshold relaxation

According to ANSI C63.17- 2013 Section 4

10) Duplex Connections

According to ANSI C63.17- 2013 Section 8.3

11) Alternative monitoring interval

According to ANSI C63.17- 2013 Section 8.4

12) Frame Repetition Stability Frame Period and Jitter

According to ANSI C63.17- 2013 Section 6.2.2, 6.2.3

4. Test DATA AND RESULTS

4.1 Conducted Emissions

Serial Number:	2AWL-9	Test Date:	2023/11/30
Test Site:	CE	Test Mode:	Transmitting(maximum output power mode low channel)
Tester:	David Huang	Test Result:	Pass

Environmental Conditions:					
Temperature: (℃)	24.9	Relative Humidity: (%)	42	ATM Pressure: (kPa)	101.3

Test Equipment List and Details:

Manufacturer	Description	Model	Serial Number	Calibration Date	Calibration Due Date
R&S	LISN	ENV216	101132	2023/3/31	2024/3/30
R&S	EMI Test Receiver	ESR3	102726	2023/3/31	2024/3/30
MICRO-COAX	Coaxial Cable	UTIFLEX	C-0200-01	2023/8/6	2024/8/5
Audix	Test Software	E3	190306 (V9)	N/A	N/A

** Statement of Traceability: China Certification ICT Co., Ltd (Dongguan) attests that all calibrations have been performed, traceable to National Primary Standards and International System of Units (SI).*

Project No.: CR231063785
Tester: David Huang
Port: Line
Note: Transmitting

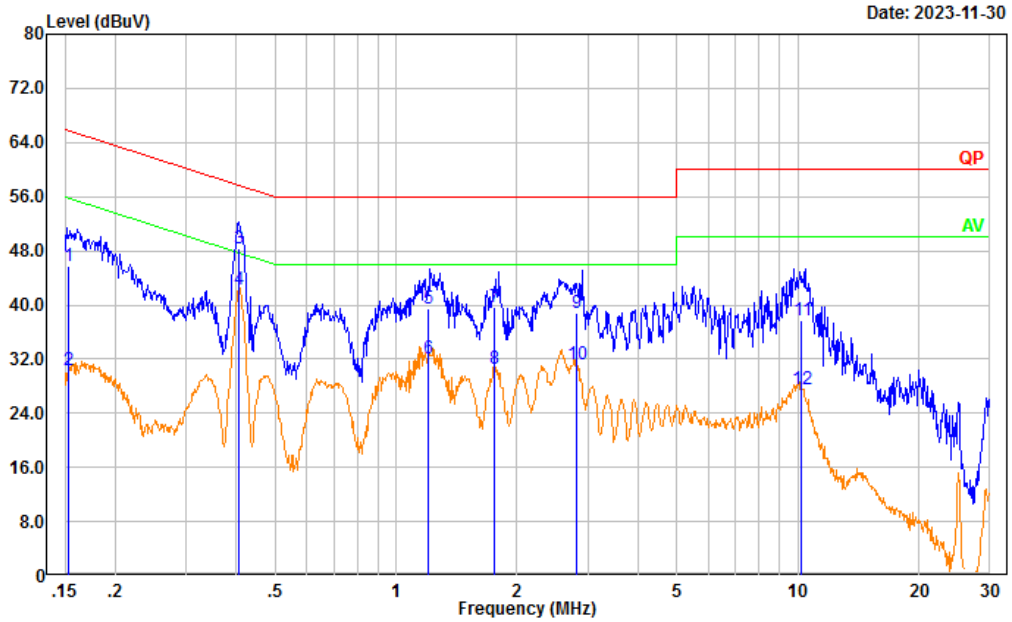

No.	Frequency (MHz)	Reading (dBµV)	Factor (dB)	Result (dBµV)	Limit (dBµV)	Margin (dB)	Detector
1	0.153	36.03	9.61	45.64	65.83	20.19	QP
2	0.153	20.77	9.61	30.38	55.83	25.45	Average
3	0.407	38.74	9.61	48.35	57.70	9.35	QP
4	0.407	32.58	9.61	42.19	47.70	5.51	Average
5	1.204	29.78	9.62	39.40	56.00	16.60	QP
6	1.204	22.49	9.62	32.11	46.00	13.89	Average
7	1.759	30.06	9.63	39.69	56.00	16.31	QP
8	1.759	20.90	9.63	30.53	46.00	15.47	Average
9	2.815	29.13	9.65	38.78	56.00	17.22	QP
10	2.815	21.52	9.65	31.17	46.00	14.83	Average
11	10.220	27.98	9.67	37.65	60.00	22.35	QP
12	10.220	17.82	9.67	27.49	50.00	22.51	Average

Project No.: CR231063785
Tester: David Huang
Port: neutral
Note: Transmitting

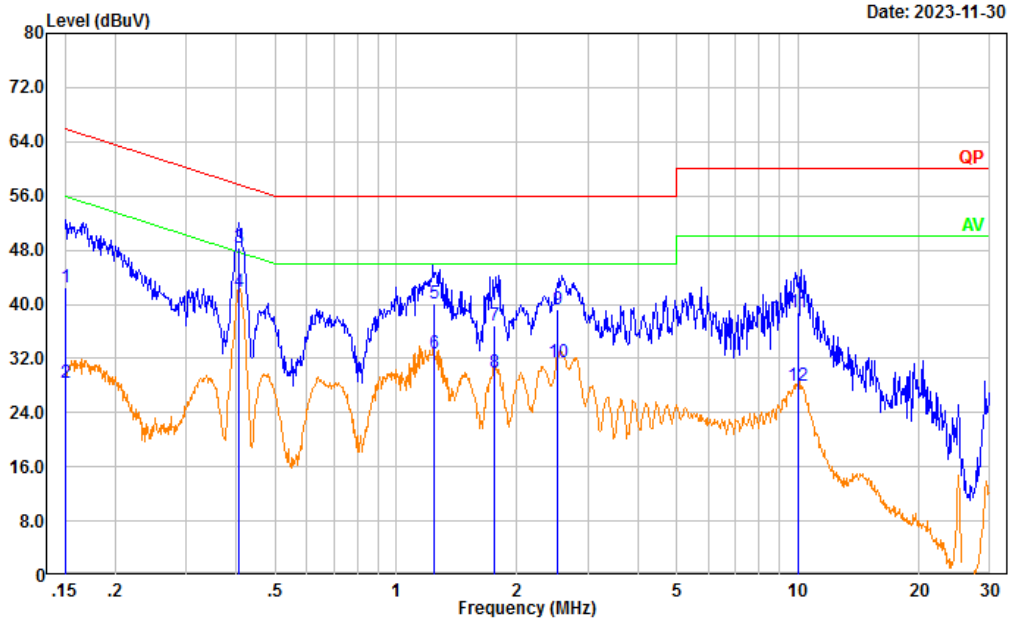

No.	Frequency (MHz)	Reading (dBµV)	Factor (dB)	Result (dBµV)	Limit (dBµV)	Margin (dB)	Detector
1	0.151	32.88	9.61	42.49	65.94	23.45	QP
2	0.151	18.74	9.61	28.35	55.94	27.59	Average
3	0.406	38.76	9.61	48.37	57.74	9.37	QP
4	0.406	32.28	9.61	41.89	47.74	5.85	Average
5	1.241	30.51	9.62	40.13	56.00	15.87	QP
6	1.241	23.11	9.62	32.73	46.00	13.27	Average
7	1.758	27.20	9.63	36.83	56.00	19.17	QP
8	1.758	20.30	9.63	29.93	46.00	16.07	Average
9	2.524	29.51	9.64	39.15	56.00	16.85	QP
10	2.524	21.85	9.64	31.49	46.00	14.51	Average
11	9.977	29.03	9.67	38.70	60.00	21.30	QP
12	9.977	18.26	9.67	27.93	50.00	22.07	Average

4.2 Emission Bandwidth:

Serial Number:	2AWL-8	Test Date:	2023/11/17~2023/12/04
Test Site:	RF	Test Mode:	Transmitting
Tester:	Len Huang, Ken Tang	Test Result:	Pass

Environmental Conditions:					
Temperature: (℃)	25.5	Relative Humidity: (%)	42	ATM Pressure: (kPa)	101

Test Equipment List and Details:

Manufacturer	Description	Model	Serial Number	Calibration Date	Calibration Due Date
R&S	Spectrum Analyzer	FSV40-N	102259	2023/4/18	2024/4/17
Unknown	Coaxial Cable	C-SJ00-0010	C0010/01	Each time	N/A
Weinschel	Power Splitter	1515	RA914	Each time	N/A
eastsheep	Coaxial Attenuator	2W-SMA-JK-18G	21060322	Each time	N/A
R&S	Digital Radio communication Tester	CMD 60M	846956/010	2023/3/31	2024/3/30

** Statement of Traceability: China Certification ICT Co., Ltd (Dongguan) attests that all calibrations have been performed, traceable to National Primary Standards and International System of Units (SI).*

Test Data:

Test Channel	Test Frequency (MHz)	99% Emission Bandwidth (MHz)	26 dB Emission Bandwidth (MHz)	Limit (MHz)
Lowest	1921.536	1.235	1.465	50 kHz ~ 2.5 MHz
Middle	1924.992	1.241	1.452	50 kHz ~ 2.5 MHz
Highest	1928.448	1.250	1.452	50 kHz ~ 2.5 MHz

99% Emission Bandwidth	
Lowest Channel	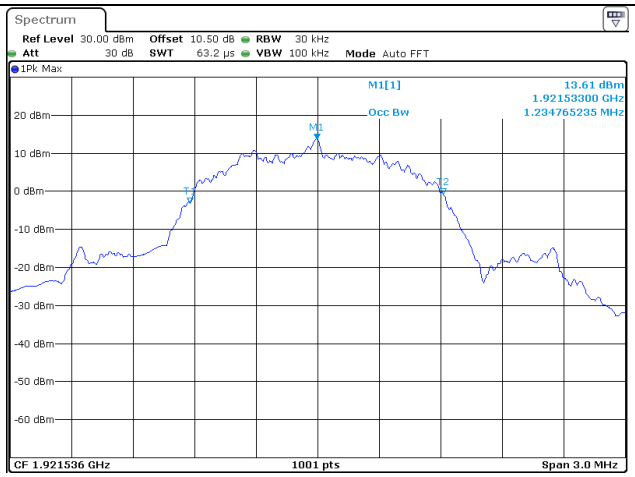 ProjectNo.:CR231063785-PP Tester:Len Huang Date: 17.NOV.2023 15:15:34
Middle Channel	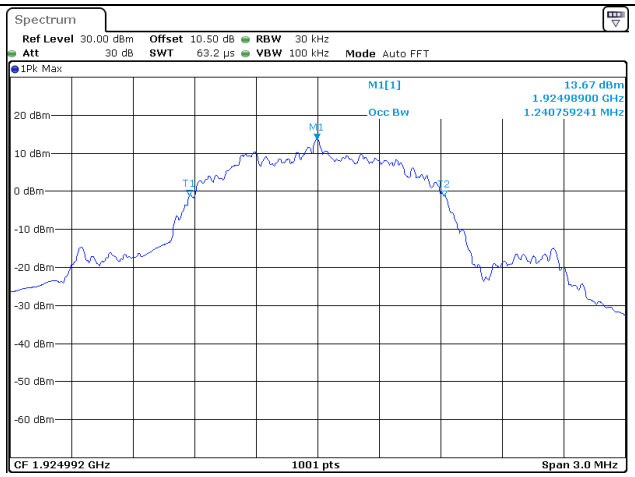 ProjectNo.:CR231063785-PP Tester:Ken Tang Date: 4.DEC.2023 20:13:17
Highest Channel	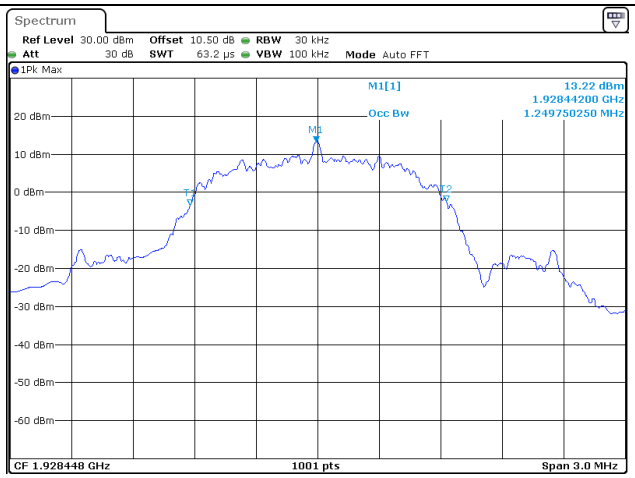 ProjectNo.:CR231063785-PP Tester:Ken Tang Date: 4.DEC.2023 20:08:18

26 dB Emission Bandwidth

Lowest Channel	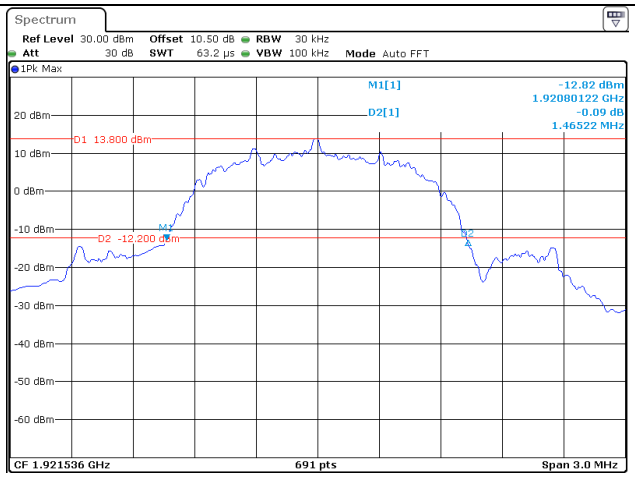
Middle Channel	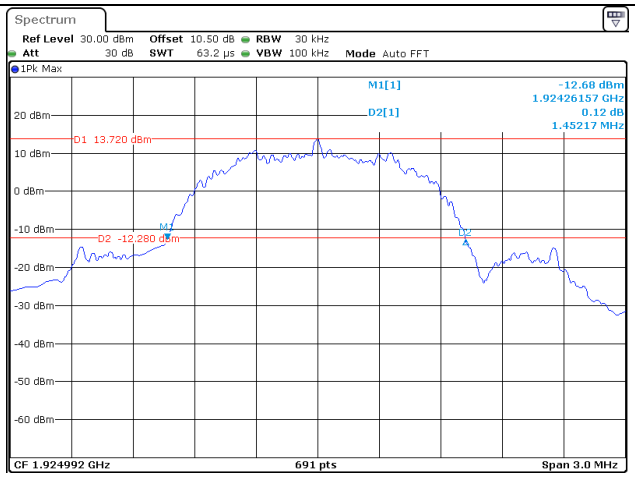
Highest Channel	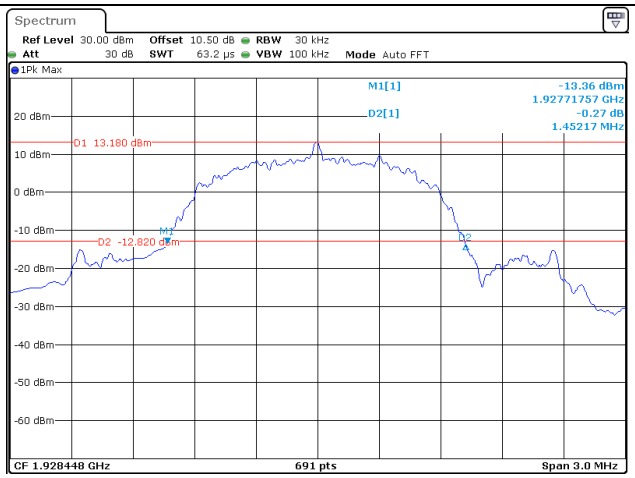

4.3 Peak Transmit Power:

Serial Number:	2AWL-8	Test Date:	2023/11/17
Test Site:	RF	Test Mode:	Transmitting
Tester:	Len Huang	Test Result:	Pass

Environmental Conditions:					
Temperature: (℃)	25.5	Relative Humidity: (%)	42	ATM Pressure: (kPa)	101

Test Equipment List and Details:

Manufacturer	Description	Model	Serial Number	Calibration Date	Calibration Due Date
R&S	Spectrum Analyzer	FSV40-N	102259	2023/4/18	2024/4/17
Unknown	Coaxial Cable	C-SJ00-0010	C0010/01	Each time	N/A
Weinschel	Power Splitter	1515	RA914	Each time	N/A
eastsheep	Coaxial Attenuator	2W-SMA-JK-18G	21060301	Each time	N/A
R&S	Digital Radio communication Tester	CMD 60M	846956/010	2023/3/31	2024/3/30

** Statement of Traceability: China Certification ICT Co., Ltd (Dongguan) attests that all calibrations have been performed, traceable to National Primary Standards and International System of Units (SI).*

Test Data:

Channel	Frequency (MHz)	Peak Transmit Power (dBm)	Limit (dBm)
Lowest	1921.536	15.27	19.62
Middle	1924.992	14.94	19.60
Highest	1928.448	14.63	19.60

Note:
Peak Transmit Power Limit = $100(EBW(Hz))^{1/2}$ μW
The maximum antenna gain is 4.21dBi>3dBi, the limit should reduced 1.21dB

Peak Transmit Power	
Lowest Channel	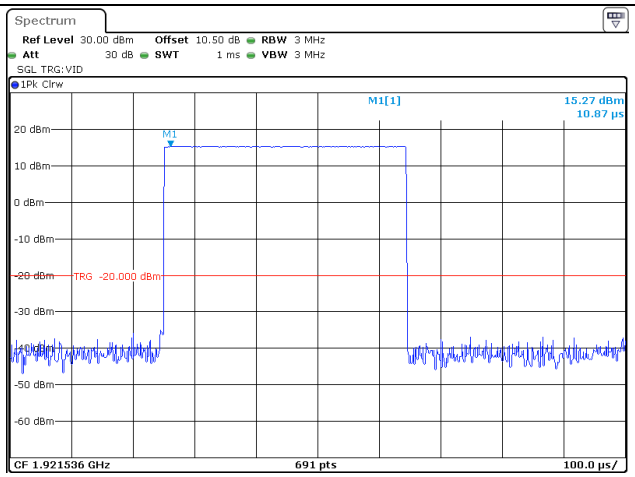
Middle Channel	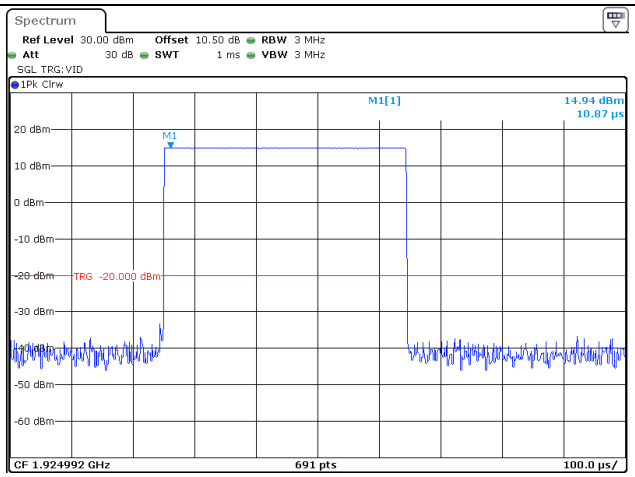
Highest Channel	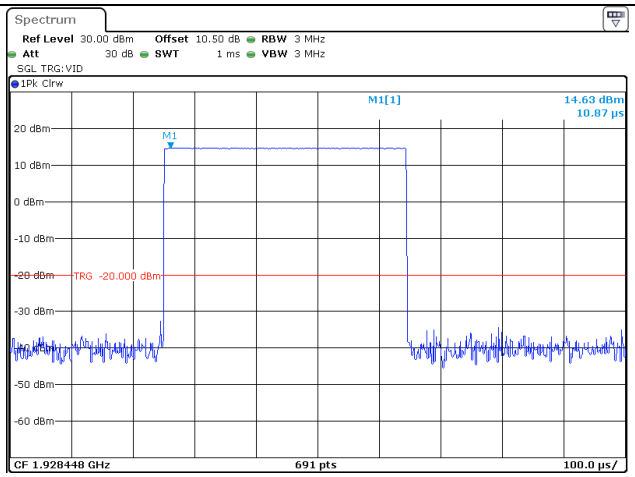

4.4 Power Spectral Density:

Serial Number:	2AWL-8	Test Date:	2023/11/17
Test Site:	RF	Test Mode:	Transmitting
Tester:	Len Huang	Test Result:	Pass

Environmental Conditions:					
Temperature: (℃)	25.5	Relative Humidity: (%)	42	ATM Pressure: (kPa)	101

Test Equipment List and Details:

Manufacturer	Description	Model	Serial Number	Calibration Date	Calibration Due Date
R&S	Spectrum Analyzer	FSV40-N	102259	2023/4/18	2024/4/17
Unknown	Coaxial Cable	C-SJ00-0010	C0010/01	Each time	N/A
Weinschel	Power Splitter	1515	RA914	Each time	N/A
eastsheep	Coaxial Attenuator	2W-SMA-JK-18G	21060322	Each time	N/A
R&S	Digital Radio communication Tester	CMD 60M	846956/010	2023/3/31	2024/3/30

** Statement of Traceability: China Certification ICT Co., Ltd (Dongguan) attests that all calibrations have been performed, traceable to National Primary Standards and International System of Units (SI).*

Test Data:

Channel	**Frequency (MHz)**	**Power Spectral Density**		**Limit (mW/3kHz)**
		(dBm/3kHz)	**(mW/3kHz)**	
Lowest	1921.536	-5.46	0.284	3
Middle	1924.992	-5.68	0.270	3
Highest	1928.448	-6.20	0.240	3

Power Spectral Density

Lowest Channel	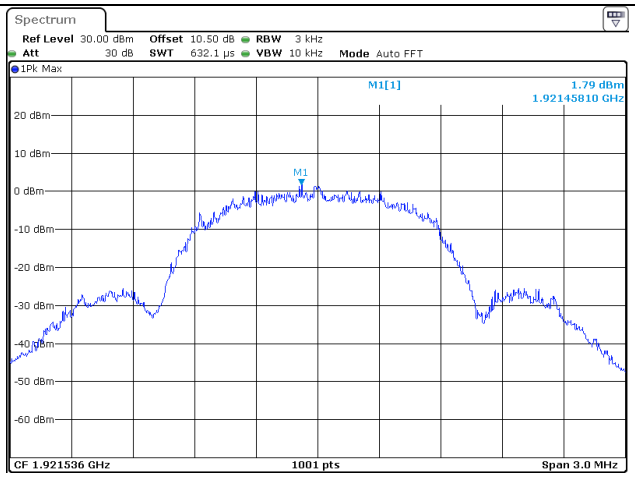 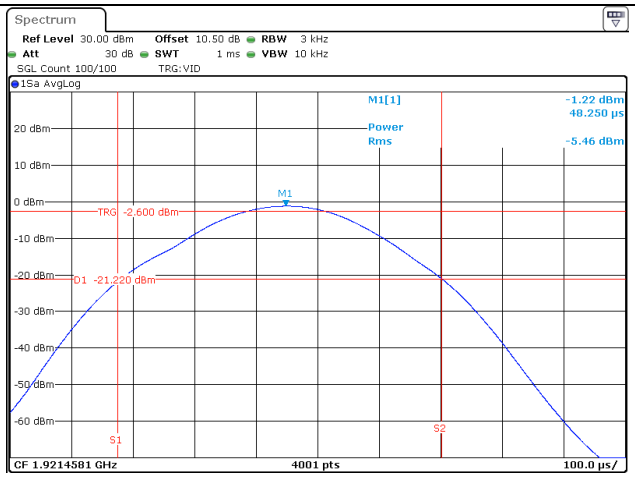

Power Spectral Density	
Middle Channel	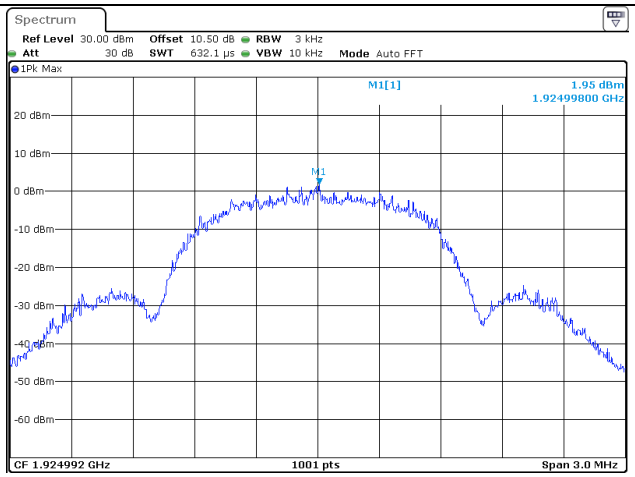
	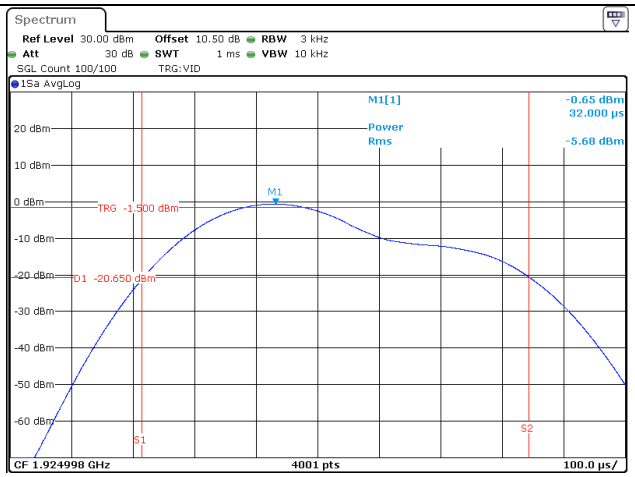

Power Spectral Density	
Highest Channel	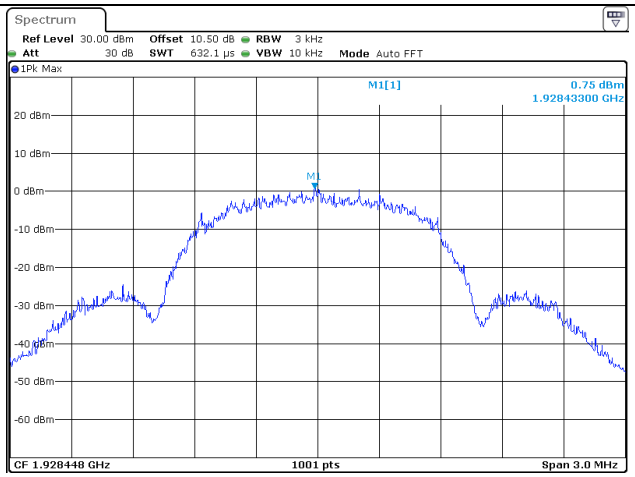
	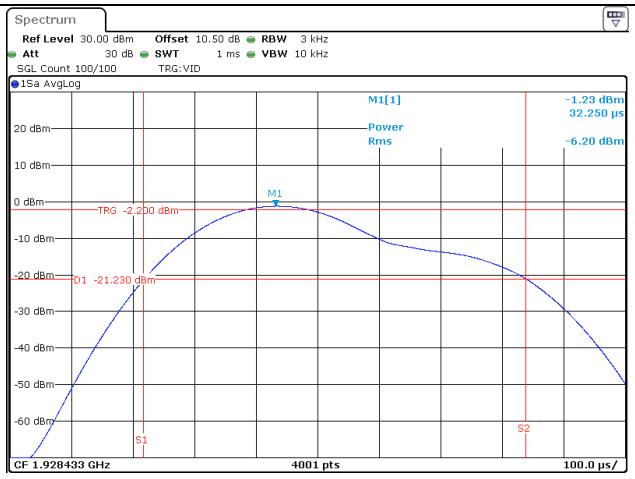

4.5 Emission Inside and Outside the Sub-band:

Serial Number:	2AWL-8	Test Date:	2023/11/17
Test Site:	RF	Test Mode:	Transmitting
Tester:	Len Huang	Test Result:	Pass

Environmental Conditions:					
Temperature: (℃)	25.5	Relative Humidity: (%)	42	ATM Pressure: (kPa)	101

Test Equipment List and Details:

Manufacturer	Description	Model	Serial Number	Calibration Date	Calibration Due Date
R&S	Spectrum Analyzer	FSV40-N	102259	2023/4/18	2024/4/17
Unknown	Coaxial Cable	C-SJ00-0010	C0010/01	Each time	N/A
Weinschel	Power Splitter	1515	RA914	Each time	N/A
eastsheep	Coaxial Attenuator	2W-SMA-JK-18G	21060322	Each time	N/A
R&S	Digital Radio communication Tester	CMD 60M	846956/010	2023/3/31	2024/3/30

** Statement of Traceability: China Certification ICT Co., Ltd (Dongguan) attests that all calibrations have been performed, traceable to National Primary Standards and International System of Units (SI).*

Test Data:

Unwanted Emission inside the Sub-band	
Low Channel	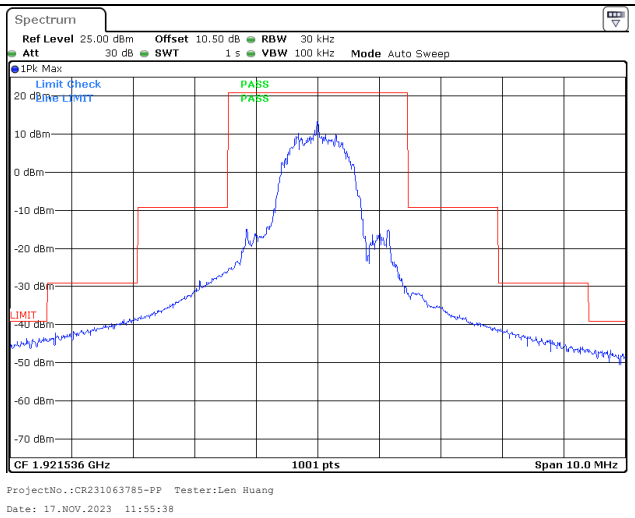
Middle Channel	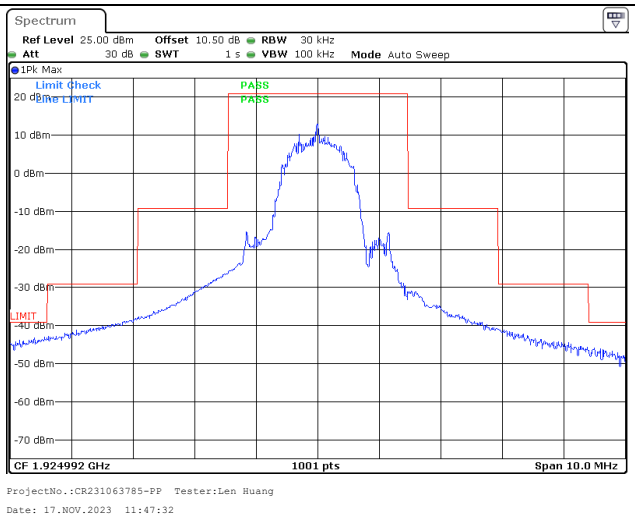
High Channel	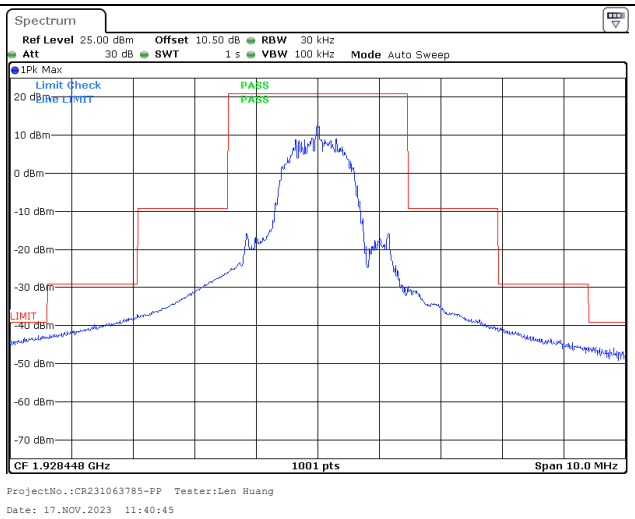

Low Channel (Unwanted Emission outside the Sub-band)

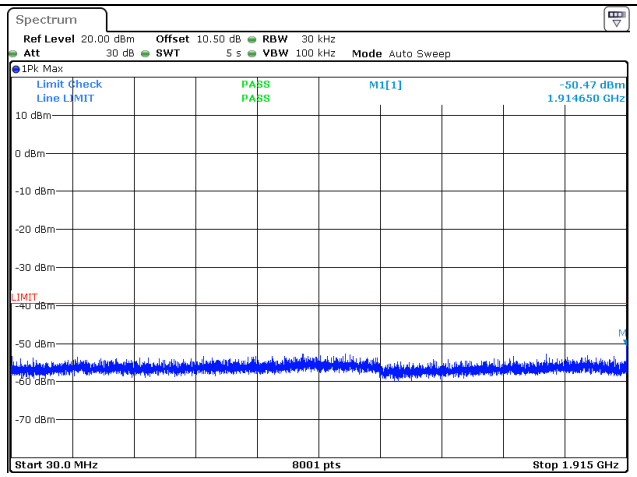

ProjectNo.:CR231063785-PP Tester:Len Huang
Date: 17.NOV.2023 11:56:20

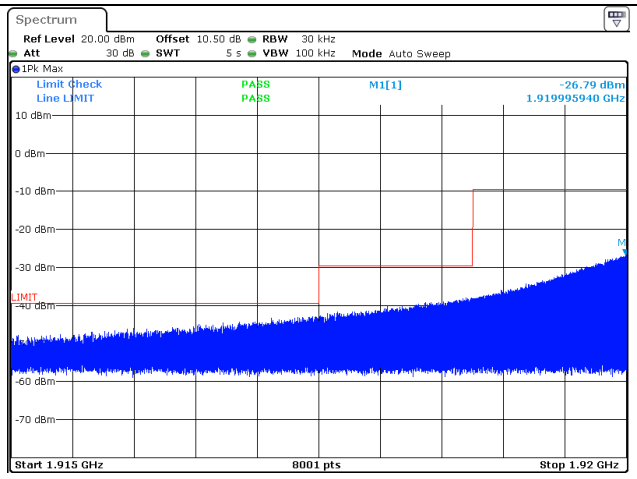

ProjectNo.:CR231063785-PP Tester:Len Huang
Date: 17.NOV.2023 11:57:01

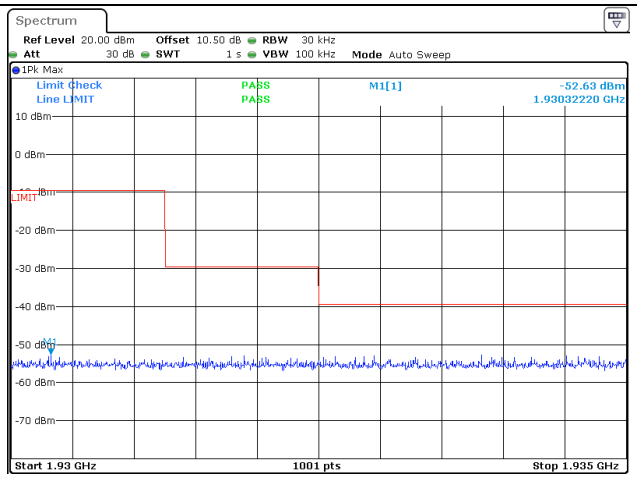

ProjectNo.:CR231063785-PP Tester:Len Huang
Date: 17.NOV.2023 11:57:37

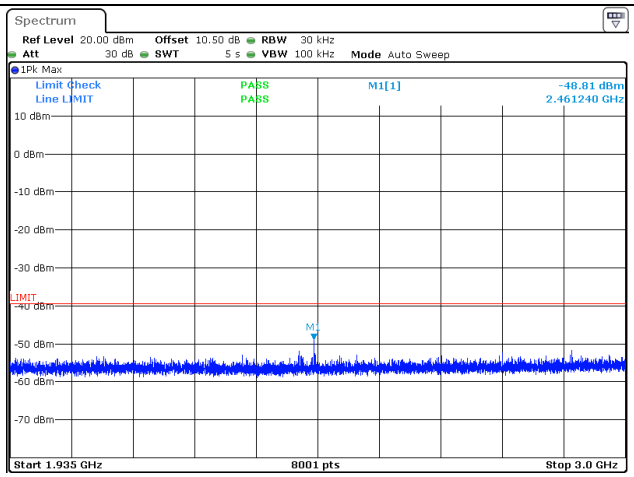

ProjectNo.:CR231063785-PP Tester:Len Huang

Date: 17.NOV.2023 11:58:18

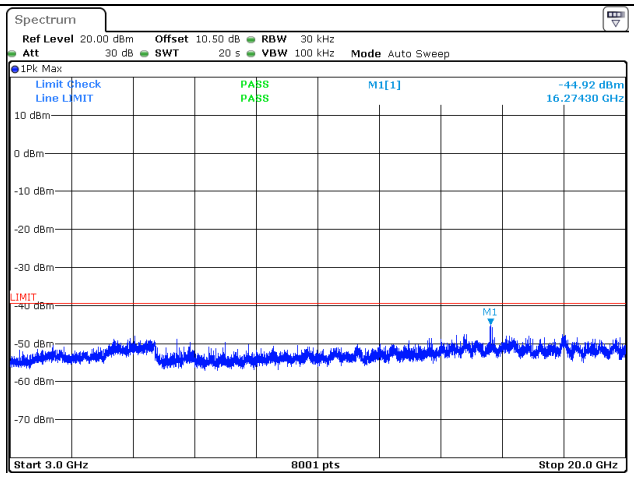

ProjectNo.:CR231063785-PP Tester:Len Huang

Date: 17.NOV.2023 11:59:17

Middle Channel (Unwanted Emission outside the Sub-band)

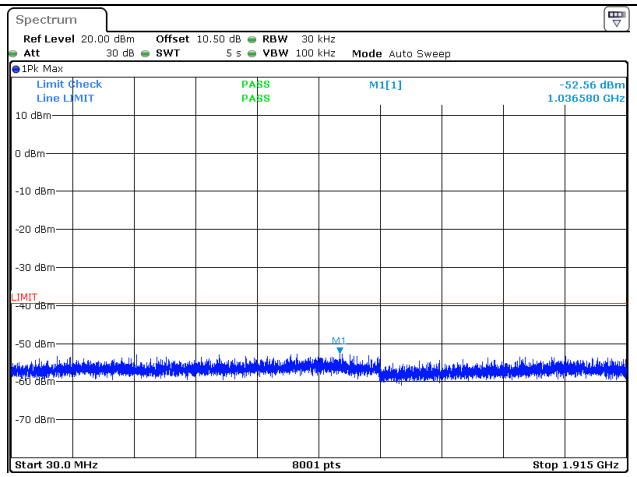

ProjectNo.:CR231063785-PP Tester:Len Huang

Date: 17.NOV.2023 11:48:01

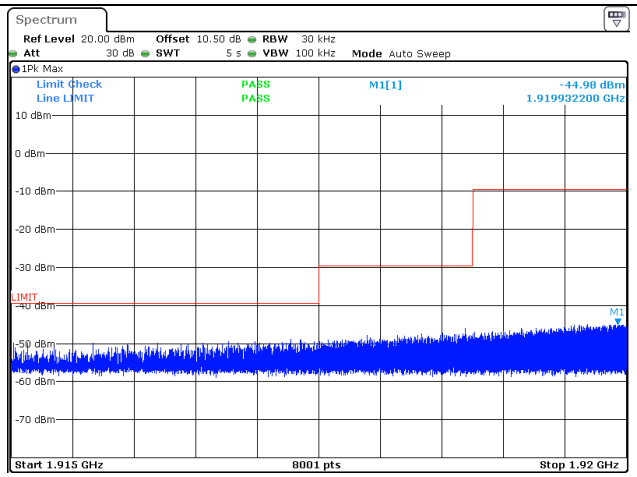

ProjectNo.:CR231063785-PP Tester:Len Huang

Date: 17.NOV.2023 11:48:42

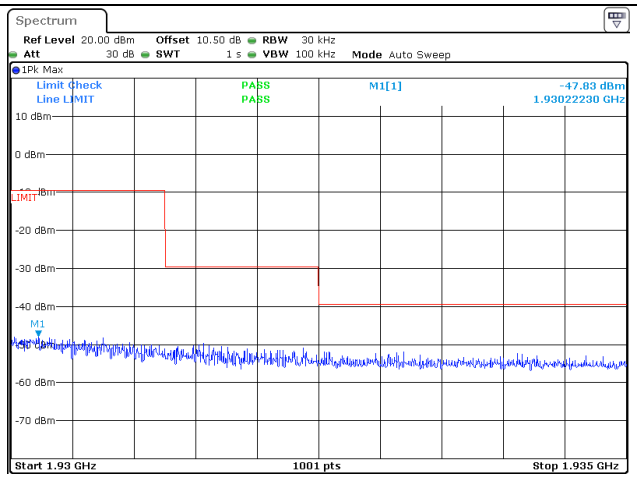

ProjectNo.:CR231063785-PP Tester:Len Huang

Date: 17.NOV.2023 11:49:18

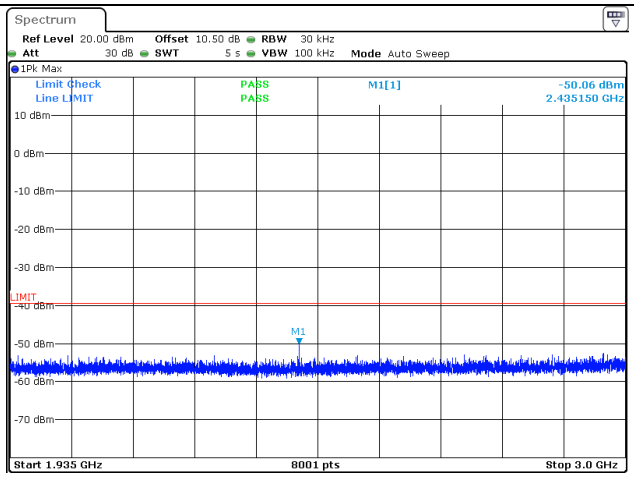
Spectrum
Ref Level 20.00 dBm Offset 10.50 dB RBW 30 kHz
Att 30 dB SWT 5 s VBW 100 kHz Mode Auto Sweep
1Pk Max
Limit Check PASS M1[1] -50.06 dBm
Line LIMIT PASS 2.435150 GHz
10 dBm
0 dBm
-10 dBm
-20 dBm
-30 dBm
LIMIT
-40 dBm
-50 dBm
M1
-60 dBm
-70 dBm
Start 1.935 GHz 8001 pts Stop 3.0 GHz
ProjectNo.:CR231063785-PP Tester:Len Huang
Date: 17.NOV.2023 11:49:54

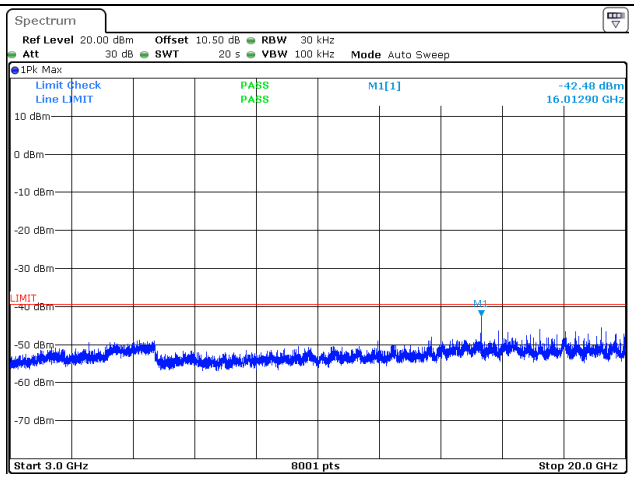
Spectrum
Ref Level 20.00 dBm Offset 10.50 dB RBW 30 kHz
Att 30 dB SWT 20 s VBW 100 kHz Mode Auto Sweep
1Pk Max
Limit Check PASS M1[1] -42.48 dBm
Line LIMIT PASS 16.01290 GHz
10 dBm
0 dBm
-10 dBm
-20 dBm
-30 dBm
LIMIT
-40 dBm
M1
-50 dBm
-60 dBm
-70 dBm
Start 3.0 GHz 8001 pts Stop 20.0 GHz
ProjectNo.:CR231063785-PP Tester:Len Huang
Date: 17.NOV.2023 11:50:54

High Channel (Unwanted Emission outside the Sub-band)

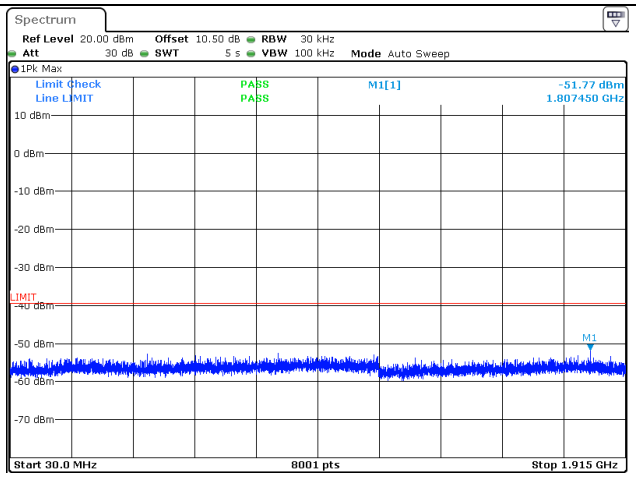

ProjectNo.:CR231063785-PP Tester:Len Huang

Date: 17.NOV.2023 11:41:37

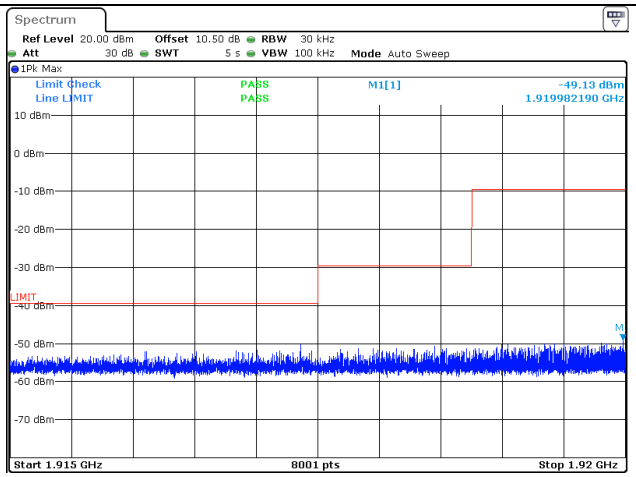

ProjectNo.:CR231063785-PP Tester:Len Huang

Date: 17.NOV.2023 11:42:19

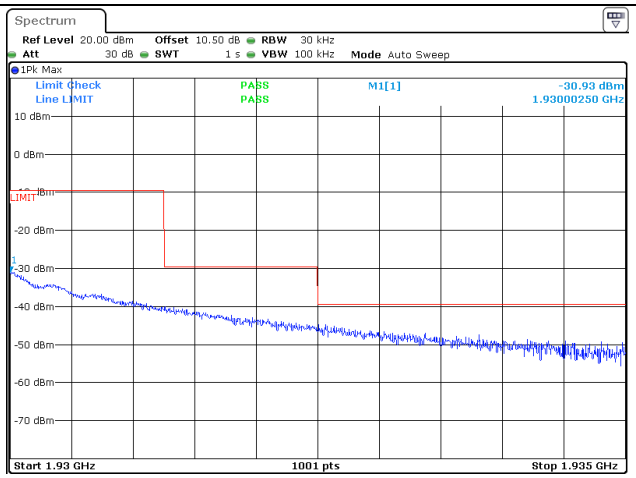

ProjectNo.:CR231063785-PP Tester:Len Huang

Date: 17.NOV.2023 11:42:54

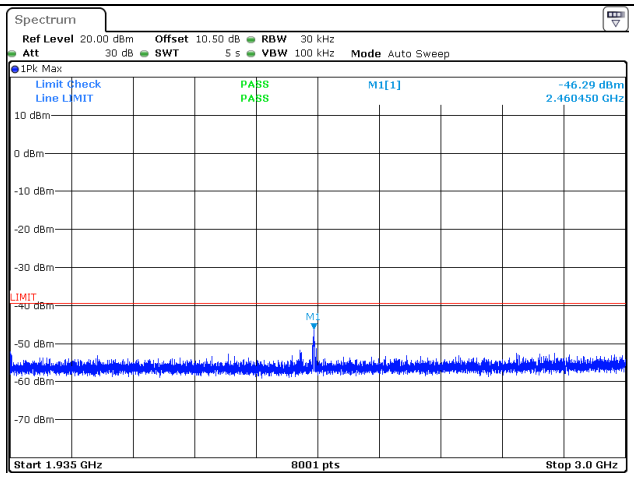
Spectrum
Ref Level 20.00 dBm Offset 10.50 dB RBW 30 kHz
Att 30 dB SWT 5 s VBW 100 kHz Mode Auto Sweep
1Pk Max
Limit Check PASS M1[1] -46.29 dBm
Line LIMIT PASS 2.460450 GHz
10 dBm
0 dBm
-10 dBm
-20 dBm
-30 dBm
LIMIT
-40 dBm
-50 dBm
-60 dBm
-70 dBm
M1
Start 1.935 GHz 8001 pts Stop 3.0 GHz
ProjectNo.:CR231063785-PP Tester:Len Huang
Date: 17.NOV.2023 11:43:36

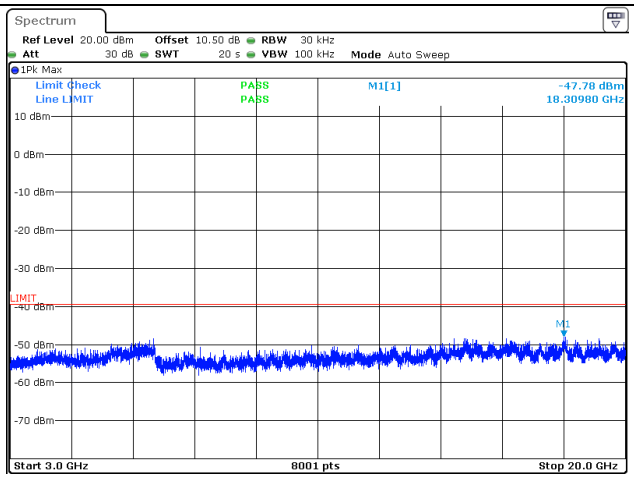
Spectrum
Ref Level 20.00 dBm Offset 10.50 dB RBW 30 kHz
Att 30 dB SWT 20 s VBW 100 kHz Mode Auto Sweep
1Pk Max
Limit Check PASS M1[1] -47.78 dBm
Line LIMIT PASS 18.30980 GHz
10 dBm
0 dBm
-10 dBm
-20 dBm
-30 dBm
LIMIT
-40 dBm
-50 dBm
-60 dBm
-70 dBm
M1
Start 3.0 GHz 8001 pts Stop 20.0 GHz
ProjectNo.:CR231063785-PP Tester:Len Huang
Date: 17.NOV.2023 11:44:37

4.6 Frequency Stability:

Serial Number:	2AWL-8	Test Date:	2023/11/17
Test Site:	RF	Test Mode:	Transmitting
Tester:	Len Huang	Test Result:	Pass

Environmental Conditions:					
Temperature: (℃)	25.5	Relative Humidity: (%)	42	ATM Pressure: (kPa)	101

Test Equipment List and Details:

Manufacturer	Description	Model	Serial Number	Calibration Date	Calibration Due Date
BACL	TEMP&HUMI Test Chamber	BTH-150-40	30174	2023/3/31	2024/3/30
Unknown	Coaxial Cable	C-SJ00-0010	C0010/01	Each time	N/A
ZHAOXIN	DC Power Supply	RXN-6010D	21R6010D0912386	N/A	N/A
eastsheep	Coaxial Attenuator	2W-SMA-JK-18G	21060322	Each time	N/A
UNI-T	Multimeter	UT39A+	C210582554	2023/9/28	2024/9/27
R&S	Digital Radio communication Tester	CMD 60M	846956/010	2023/3/31	2024/3/30

** Statement of Traceability: China Certification ICT Co., Ltd (Dongguan) attests that all calibrations have been performed, traceable to National Primary Standards and International System of Units (SI).*

Test Data:

Temperature (℃)	Voltage (V_{DC})	Channel Frequency (MHz)	Measured Frequency Offset (kHz)	Measured Frequency Offset (ppm)	Limit (ppm)
-20	2.4	1924.992	8	4.16	±10
20	2.4	1924.992	5	2.60	±10
50	2.4	1924.992	12	6.23	±10

4.7 Specific Requirements For UPCS Device:

Serial Number:	2AWL-8	Test Date:	2023/11/17
Test Site:	RF	Test Mode:	Transmitting
Tester:	Len Huang	Test Result:	Pass

Environmental Conditions:					
Temperature: (℃)	25.5	Relative Humidity: (%)	42	ATM Pressure: (kPa)	101

Test Equipment List and Details:

Manufacturer	Description	Model	Serial Number	Calibration Date	Calibration Due Date
R&S	Spectrum Analyzer	FSV40-N	102259	2023/4/18	2024/4/17
Unknown	Coaxial Cable	C-SJ00-0010	C0010/01	Each time	N/A
Weinschel	Power Splitter	1515	RA914	Each time	N/A
eastsheep	Coaxial Attenuator	2W-SMA-JK-18G	21060322	Each time	N/A
Agilent	MXG Vector Signal Generator	N5182B	MY51350144	2023/3/31	2024/3/30
R&S	Digital Radio communication Tester	CMD 60M	846956/010	2023/3/31	2024/3/30

** Statement of Traceability: China Certification ICT Co., Ltd (Dongguan) attests that all calibrations have been performed, traceable to National Primary Standards and International System of Units (SI).*

Test Data:

Test Result: Pass

Please see the below data

1) Automatic Discontinuation of Transmission

Test result:

The following tests were performed after a connection had been established with Base unit.

Test condition	Reaction of EUT	Pass/Fail
Adapter removed from base unit	Connection break down	Pass
Battery remove from Handset	Connection break down	Pass

2) Monitoring Time

Test result:

This requirement is covered by the results of Least Interfered Channel (LIC).

Interference (Refer to ANSI C63.17 clause 7.3.3)	Reaction of EUT	Results
a) Apply the interference on f_1 at level T_L+U_M+20dB and no interference on f_2. Initiate transmission and verify the transmission only on f_2. Then terminate it.	EUT transmits on f_2	Pass
b) Apply the interference on f_2 at level T_L+U_M+20dB and immediately remove all interference from *f*1. The EUT should immediately attempt transmission on *f*1 (but at least 20 ms after the interference on *f*2 is applied), verify the transmission only on f_1.	EUT transmission f_1	Pass

3) Lower Monitoring Threshold

Test result:

Not applicable because the EUT has more 40 defined duplex system access channels and meet the provision of the Least Interfered Channel (LIC).

4) Maximum Transmit Period

Test result:

Repetition of Access Criteria	Measured Maximum Transmission Time (Second)	Limit (Second)	Results
First	17675	28,800	Pass
Second	17675	28,800	Pass

5) System Acknowledgement

Test result:

Test	Time taken (second)	Limit (second)	Result
Initial Connection acknowledgement	0.61	1	Pass
Change of access criteria for control information	N/A	30	N/A
Transmission cease time after loss of acknowledgement	4.44	30	Pass

Note: N/A=Not Applicable

6) Least Interfered Channel (LIC)

Calculation of monitoring threshold limits for isochroous devices:

Lower threshold: $T_L = -174+10Log_{10}B + M_L + P_{MAX}-P_{EUT}$ (dBm)
Where: B=Emission bandwidth (Hz)
M_L = dB the threshold may exceed thermal noise (30 for T_L)
$P_{MAX} = 5Log_{10}B-10$(dBm)
P_{EUT} = Transmitted power (dBm)

Calculated thresholds:

Monitor Threshold	B(MHz)	M_L(dB)	P_{MAX} (dBm)	P_{EUT} (dBm)	Threshold (dBm)
Lower threshold	1.465	30	19.62	15.27	-77.99

Note: 1. The upper threshold is applicable as the EUT utilizes more than 20 duplex system channels

Test result:

LIC procedure test:

Interference (Refer to ANSI C63.17 clause 7.3.3)	Reaction of EUT	Results
a) Apply the interference on f_1 at level T_L+U_M+7dB and the interference on f_2 at level T_L+U_M. Initiate transmission and verify the transmission only on f_2. Repeat 5 times.	EUT transmits on f_2	Pass
b) Apply the interference on f_1 at level T_L+U_M and the interference on f_2 at level T_L+U_M+7dB. Initiate transmission and verify the transmission only on f_1. Repeat 5 times.	EUT transmits on f_1	Pass
c) Apply the interference on f_1 at level T_L+U_M+1dB the interference on f_2 at level T_L+U_M-6dB. Initiate transmission and verify the transmission only on f_2. Repeat 5 times.	EUT transmits on f_2	Pass
d) Apply the interference on f_1 at level T_L+U_M-6dB and the interference on f_2 at level T_L+U_M+1dB. Initiate transmission and verify the transmission only on f_1. Repeat 5 times.	EUT transmits on f_1	Pass

Selected channel confirmation:

Interference (Refer to ANSI C63.17 clause 7.3.4)	Reaction of EUT	Results
a) Apply the interference on f_1 at level T_U+U_M and no interference on f_2. Initiate transmission and verify the transmission only on f_2. Then terminate it.	EUT transmits on f_2	Pass
b) Apply the interference on f_2 at level T_L+U_M and immediately remove all interference from *f*1. The EUT should immediately attempt transmission on *f*1 (but at least 20 ms after the interference on *f*2 is applied), verify the transmission only on f_1.	EUT transmission f_1	Pass

7) Random waiting

Note: This is Not Applicable

8) Monitoring Bandwidth and Reaction Time

Test result:

Monitoring Bandwidth:

The antenna of the EUT used for monitoring is the same interior antenna that used for transmission, so the monitoring system bandwidth is equal to the emission bandwidth of the intended transmission

Reaction Time Test:

No.	Interference Pulse width (µs)	Reaction of EUT	Observing time (µs)	Result
1	50µs with level T_L+U_M	No transmission	25.63	Pass
2	35µs with level T_L+U_M+6dB	No transmission	23.26	Pass

9) Monitoring Antenna

Test result:

The antenna of the EUT used for transmission is the same interior antenna that used for monitoring.

10) Monitoring threshold relaxation

Test result:

This requirement is covered by the results of Least Interfered Channel (LIC).

11) Duplex Connections

Test result:

Interference (Refer to ANSI C63.17 § 8.3& § 8.3.2)	Reaction of EUT	Results
a) Only a single carrier f1 for EUT TDMA systems and on *f*1 and *f*2 and corresponding duplex carriers for FDMA systems.	EUT can transmit	Pass
b) All Tx windows with level TL+UM except one & Rx windows with level TL+UM+7dB except one, which are not the duplex mate.	Connected on the target Rx window and its duplex mate.	Pass
c) All Tx windows with level TL+UM+7dB except one & Rx windows with level TL+UM except one, which are not duplex mate.	Connected on the target Tx window and its duplex mate.	Pass
d) All Tx & Rx windows with level TU+UM, except one for Tx window & one for Rx window, which are not duplex mate.	No connection possible	Pass

12) Alternative monitoring interval

Test result:

Interference (Refer to ANSI C63.17 § 8.4)	Reaction of EUT	Results
a) Only a single carrier f1 for EUT TDMA systems and on *f*1 and *f*2 and corresponding duplex carriers for FDMA systems.	EUT can transmit	Pass
b) Apply interference with same parameters as EUT transmissions on all Tx windows with level TL+UM on the enabled carrier(s) and no interference on the Rx windows on the enabled carriers.	No connection is established	Pass

13) Fair Access

Test result:

The manufacturer declares that this device does not use any mechanisms as provided by FCC §15.323(c)(10) or (11) to extend the range of spectrum occupied over space or time for the purpose of denying fail access to spectrum to other device.

14) Frame Repetition Stability Frame Period and Jitter

Test result:

Frame Period and Jitter:

Max. pos. Jitter (µs)	Max. neg. Jitter (µs)	Frame period (ms)	Limit	
			Frame Period (ms)	Jitter (µs)
0.25	-0.06	10.81	20 or10/X	25

Note: X is a positive whole number.

5. EUT PHOTOGRAPHS

Please refer to the attachment CR231063785-EXP EUT EXTERNAL PHOTOGRAPHS and CR231063785-INP EUT INTERNAL PHOTOGRAPHS

6. TEST SETUP PHOTOGRAPHS

Please refer to the attachment CR231063785-00-TSP TEST SETUP PHOTOGRAPHS.

===== END OF REPORT =====