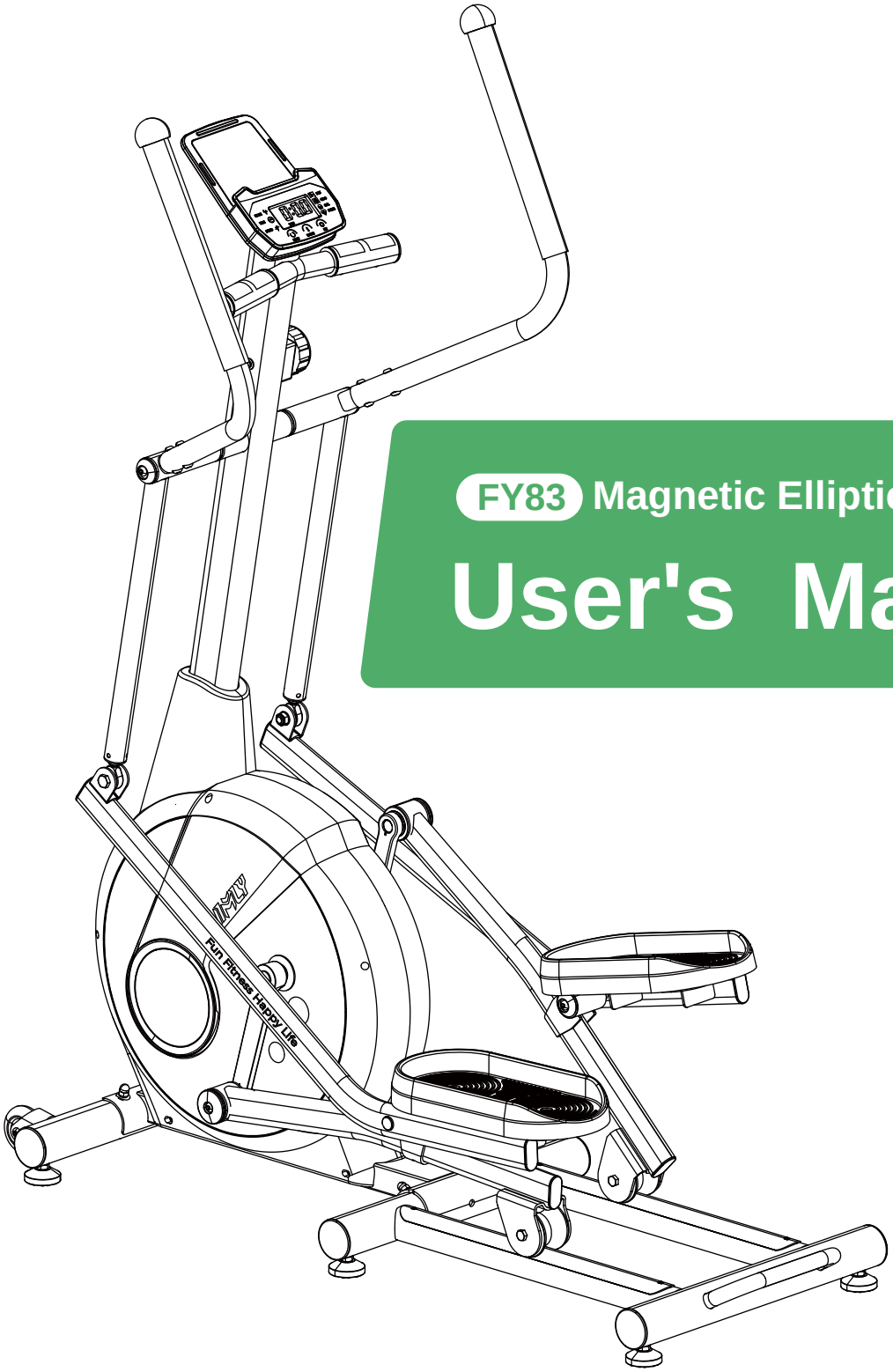

FY83 Magnetic Elliptical Machine

User's Manual

IMPORTANT: Read all instructions carefully before using this product. Retain this owner's manual for future reference. The specifications of this product may vary from this photo, subject to change without notice

Phone: 626 699 18972
Email: lovesportsservice@gmail.com
Working Time: Monday - Friday
9:00AM-12:00PM 2:00PM-6:00PM (PST)

INSTALLATION
VEDIO

CONTENT

1. IMPORTANT SAFETY INSTRUCTIONS ---------- 1

2. PARTS LIST ---------- 2

3. HARDWARE BAG ---------- 4

4. OVERVIEW DRAWING ---------- 5

5. ASSEMBLYINSTRUCTIONS ---------- 6

6. WARM UPAND COOL DOWN ROUTINE ---------- 10

7. MONITOR MANUAL ---------- 12

8. INSTRUCTIONS ---------- 13

1. FUNCTIONS OF THE BLUETOOTH ---------- 13

2. APP OPERATING INSTRUCTIONS ---------- 13

1.IMPORTANT SAFETY INSTRUCTIONS

Basic precautions should always be followed, including the following important safety instructions when using this equipment. Read all instructions before using this equipment.

1. Read all instructions and follow it carefully before using this equipment. Make sure the equipment is properly assembled and tightened before use.
2. Before exercise, in order to avoid injuring the muscle, warm-up exercises are recommended.
3. Please make sure all parts are not damaged and fixed well before use. This equipment should be placed on a flat surface when using. Using a mat or other covering material on the ground is recommended.
4. Please wear proper clothes and shoes when using this equipment; do not wear clothes that might catch any part of the equipment.
5. Do not attempt any maintenance or adjustments other than those described in this manual. Should any problems arise, discontinue use and consult your local dealer.
6. Be careful when step on or leave the pedal always hold the handlebars first. Make the pedal at your side at the lowest position, step on the pedal, and stride over the main frame then step on the other pedal. When using, please hold the handlebar by hands, make the pedals running smoothly by push or pull handlebars, then run the equipment regularly by cooperation of hands and feet. After exercise, please also make one pedal at the lowest position and leave your foot on the higher pedal first and then another.
7. Do not allow the dumbbells drop freely to the ground.Damage to the product and possible personal injury may occur.
8. Do not use the equipment outdoors. It is not a commercial model.
9. This equipment is for household use only.
10. Only one person at a time should use this equipment.
11. If you feel any chest pains, nausea, dizziness, or short of breath, you should stop exercising immediately and consult your physician before continuing.
12. Care should be taken in mounting or dismounting the equipment.
13. Do not allow children to use or play on the equipment. Keep children and pets away from the equipment while in use. This machine is designed for adults use only. The minimum free space required for safe operation is not less than two meters.

WARNING: Before beginning any exercise program consult your physician. This is especially important for the people who are over 35 years old or who have pre-existing health problems. Read all instructions before using any fitness equipment.

CAUTION: Read all instructions carefully before operating this product. Retain this Owner's Manual for future reference.

2. PARTS LIST

No.	Name	Specification	QTY	No.	Name	Specification	QTY
1	Frame	Welding	1	27	hexagon socket bolt	M10*30	2
2	Front Stabilizer	Welding	1	28	Flat washer	Φ10*Φ20*2.0	4
3	Rear Stabilizer	Welding	1	29	Outer Hexagonal Stop nut	M10 S17	4
4	Console Post	Welding	1	30	Outer Hexagonal nut	M12 S17	2
5	Left Handrail	Welding	1	31	Rod end joint bearing	M12*32 L32	2
6	Right Handrail	Welding	1	32	Adjustable foot pad	Φ51.5*M10*30	6
7	Left and Right Pedal Support Tube	Welding	2	33	Outer hexagonal nut	M10 S17	6
8	Left Pedal Arm	Welding	1	34	Carriage Bolt	M8*75	2
9	Right Pedal Arm	Welding	1	35	Arc Washer	Φ8*Φ20*1.5	4
10	Console	assembly	1	36	Small spacer sleeve	Φ20*Φ10*8	4
11	Cross Pan Head bolt	M5*10	2	37	Cap Nut	M8 S13	4
12	Middle Wire	Wire L=1000mm	1	38	Round Plug	φ60*14.5	6
13	Upper Handpulse	Wire L=300mm/ Φ32tube	2	39	Movable Wheel	φ70*24	2
14	Lower Handpulse	Wire L=300mm Φ32 tube	2	40	Bearing	608Z	4
15	Cross recessed pan head self tapping bolt	ST3.5*20	4	41	Pan head hexagonal bolt	M8*40 L15	2
16	Round Plug	Φ32 Tube	2	42	Outer hexagonal Stop nut	M8 S14	5
17	Tension Control Knob	(L=39MAX)	1	43	Aluminum strip	500*25*2.5	2
18	Flat Washer	Φ5*Φ15*1.0	1	44	Cross recessed pan head self drilling bolt	ST4.2*25	8
19	Cross Pan Head Bolt	M5*30	1	45	Outer hexagonal Bolt	M10*40 L15	2
20	Long shaft	Φ19*425	1	46	Plug for Elliptical Tube	50*25 Tube	6
21	shaft sleeve	Φ38*Φ19*27	6	47	Pedals	360*180*50	2
22	Flat washer	Φ8*Φ24*2.0	5	48	Glide Wheel	Φ70*50	2
23	End Cap for Bearing	φ36*φ8.5*7	4	49	Bearing	6002/φ15*φ32*9	4
24	Pan head hexagonal bolt	M8*16 S6	8	50	Bearing for Glidewheel	Φ18*Φ10.2*28.2	4
25	Sensor Wire Line	L=1200mm	1	51	Outer hexagonal Bolt	M10*78 20/8.8	2
26	Sensor	Wire L=350mm	1	52	Bearing	6003/φ35*φ17*1 0	4

2. PARTS LIST

No.	Name	Specification	QTY	No.	Name	Specification	QTY
53	Bearing Bracket	Φ50*Φ32*20	4	77	Bearing	6004/Φ20*Φ42*1 2	2
54	Bearing	6904Z/Φ37*Φ20*9	4	78	Wave Washer	Φ20*Φ25*0.3	1
55	End Cap for Bearing	Φ50*Φ8*7.4	2	79	Shaft ring	Φ20	2
56	Flat Washer	Φ8*Φ20*1.5	2	80	Axis assy	Welding	1
57	Left Decorative Cover	Seeing Drawing	1	81	Hexagon bolt with cylindrical head	M6*15/-S5	4
58	Right Decorative Cover	Seeing Drawing	1	82	Belt Pully	Φ280*Φ20.2 J6	1
59	Handrail Arm	Φ32*1.5*709	2	83	Outer hexagonal Stop nut	M6	4
60	Foam Grip	Φ31*Φ38*320	2	84	Belt	420/J6	1
61	Ball Cap	Φ32 Tube	2	85	Left Chain Cover	Seeing Drawing	1
62	Pan head hexagonal bolt	Φ8*29*M6 HeadΦ15	4	86	Right Chain Cover	Seeing Drawing	1
63	Pan head hexagonal bolt	M6*16	4	87	Round Plate	Seeing Drawing	2
64	Pressure Plate	Welding	1	88	Cross recessed pan head self Tapping bolt	ST4.2x20	7
65	Pressure Wheel	Φ43*Φ34*24	1	89	Decorative Cover	Seeing Drawing	2
66	Flat Washer	φ6*φ12*δ1.0	1	90	Left Crank	7.9"/ Welding	1
67	Cross recessed pan head bolt	M6*12	1	91	Right Crank	7.9"/ Welding	1
68	Eye Bolt	M8*70	1	92	Outer hexagonal flange nut	M10*1.25	2
69	Pan head hexagonal bolt	M8*20	1	93	Crank Cover	Seeing Drawing	2
70	Magnetic Flywheel	Φ260/7kg	1	94	Wires for Handpulse	Wire L=300mm	2
71	Tension Bolt	M6*36	2	95	Inner Hexagon Screw	M8*20 S6 L16	4
72	U Shape Bracket	See drawing	2	96	PC Mat	φ47*φ10.5*0.4	1
73	Spring Washer	Φ6	6	97	Temporary Front Stabilizer	Welding	1
74	Outer hexagonal Nut	M6	2	98	Temporary Rear Stabilizer	Welding	1
75	Outer hexagonal flange nut	M10*1.0 thick=6mm	2	99	Square Bolt	M8*80	2
76	Cross recessed pan head self drilling bolt	ST4.2*16	5				

3. HARDWARE BAG

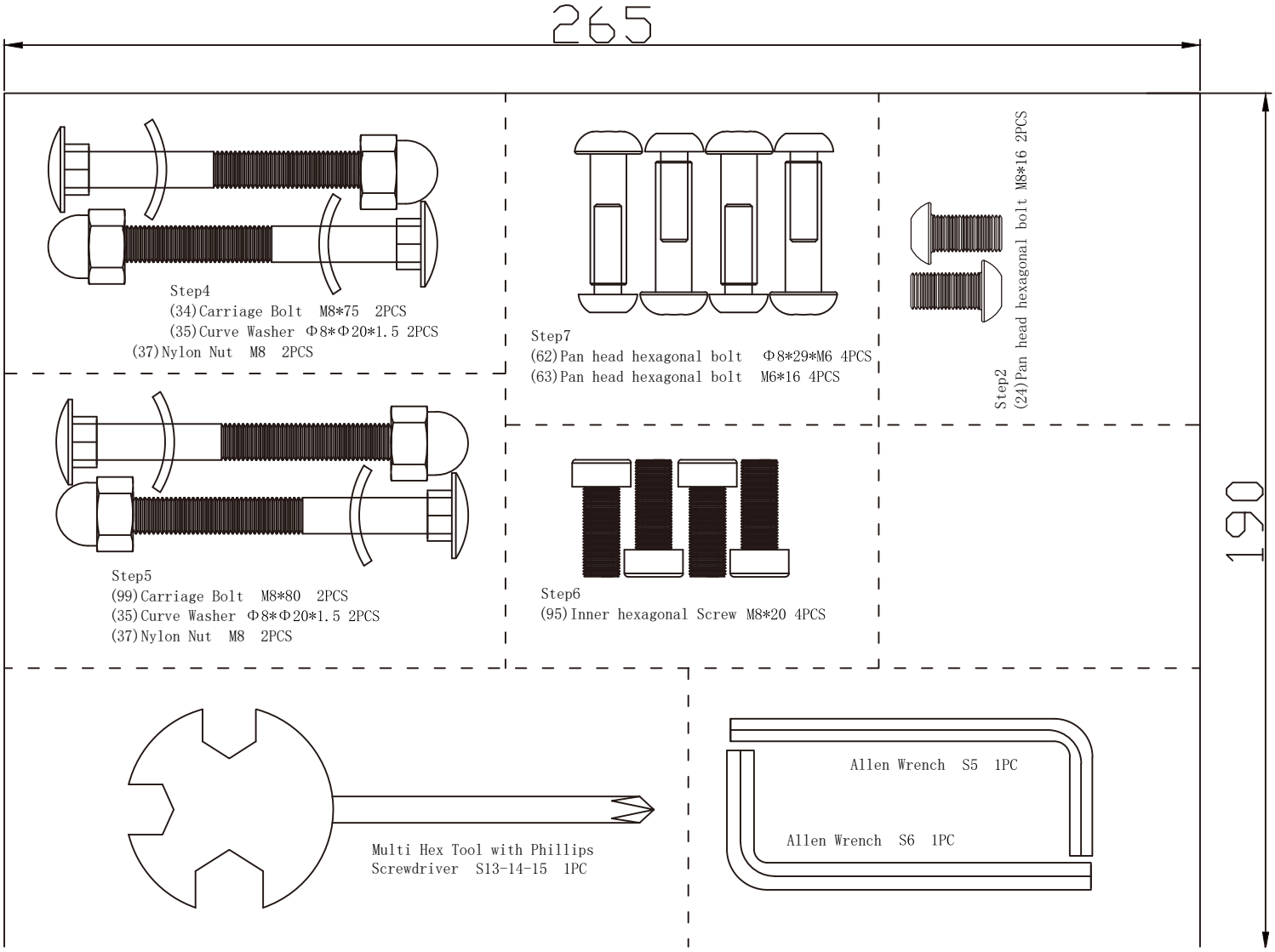

4. OVERVIEW DRAWING

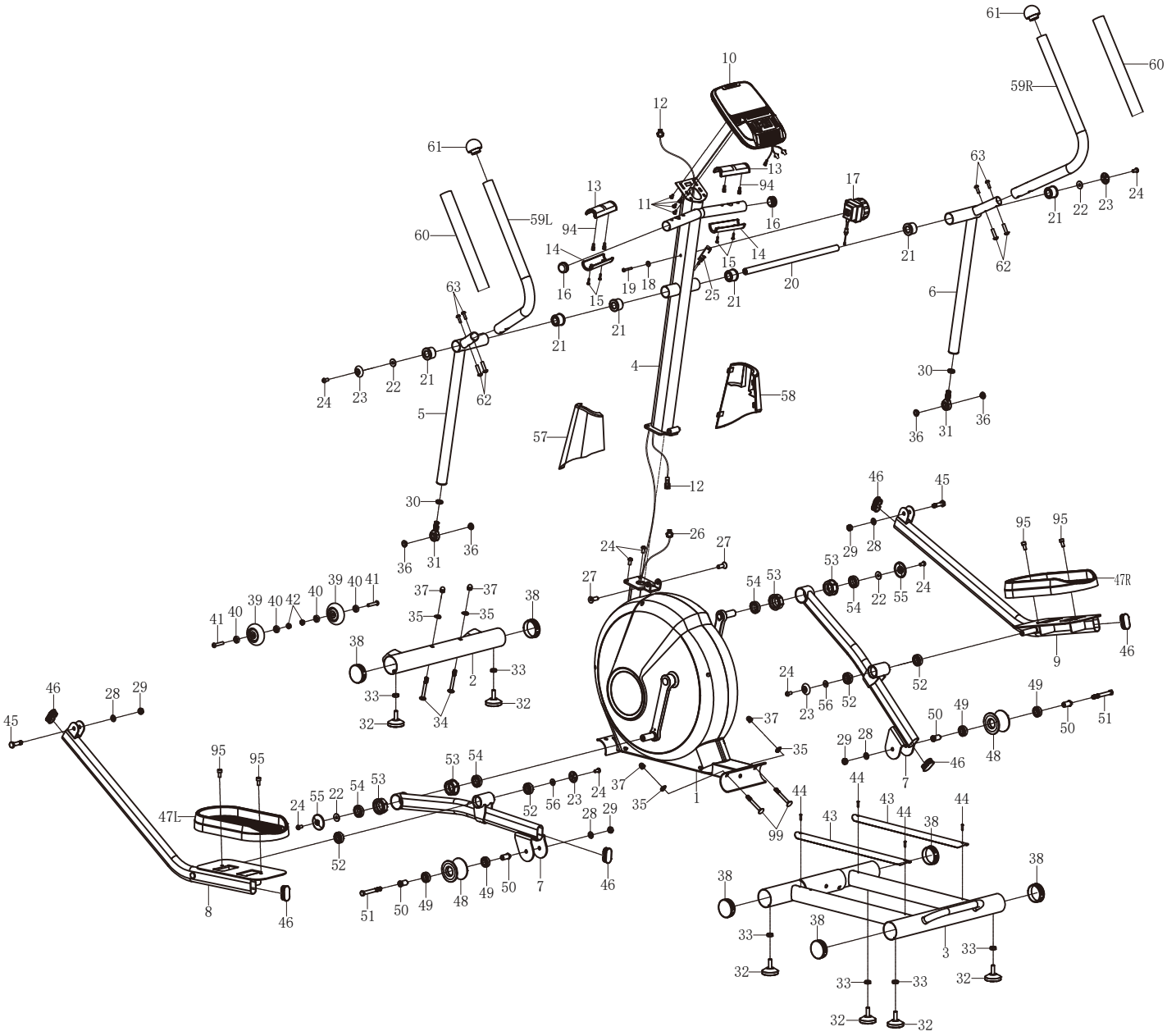

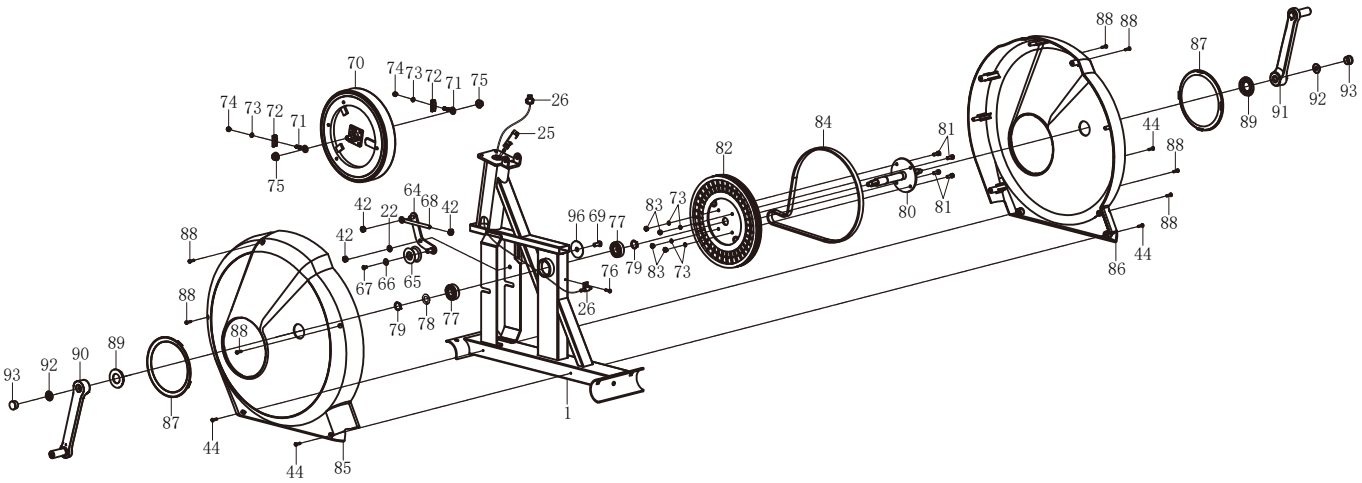

5. ASSEMBLYINSTRUCTIONS

Step 1

Thread 2pcs of Adjustable Foot Pad（32）into the hole of Front Stabilizer(2), and tighten them. Also Thread 4pcs of Adjustable Foot Pad（32）into the hole of Rear Stabilizer(3), and tighten them.

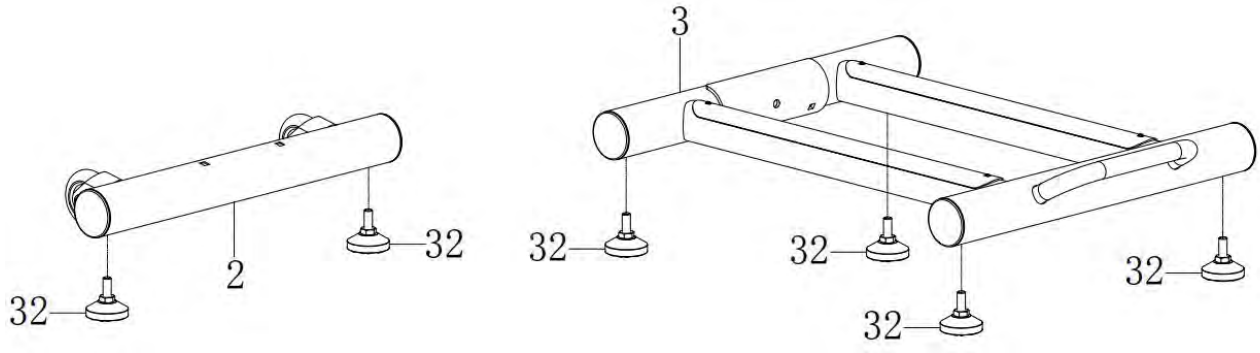

Step 2

Stand the Console Post (4) up until the Console Post (4) sitting on the frame(1). Note: Do not pinch the wires inside the Console Post (4) during standing up. Attach the Console Post (4) onto the frame (1) with the two Pan head hexagonal bolt (24）
Tighten the bolts with provided Allen Wrench S6. （As the below drawing shows）

Note: Do not Press the wires when you attach the Console Post (4)

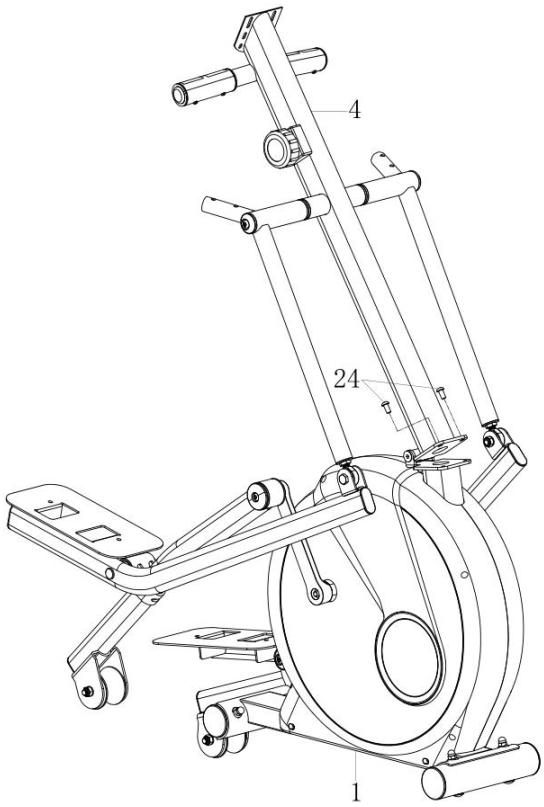

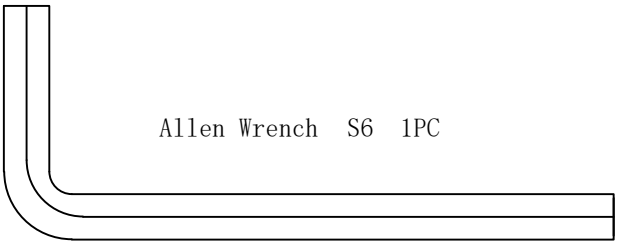

Step 3

Dismantle the pre-assembled Temporary Front Stabilizer (97), and Temporary Rear Stabilizer(98) by removing four M8 Cap Nut (37) and four Φ8xΦ20x1.5 Arc Washers (35) from the tube of Main Frame (1) with Multi Hex with Philips Screwdriver provided;

Noted: Temporary Front Stabilizer (97), and Temporary Rear Stabilizer(98) is only for Packing purpose, please throw them all away in a proper way after dismantle, also drop four M8 Cap Nut (37) and four Φ8xΦ20x1.5 Arc Washers (35) in a proper way after dismantle.

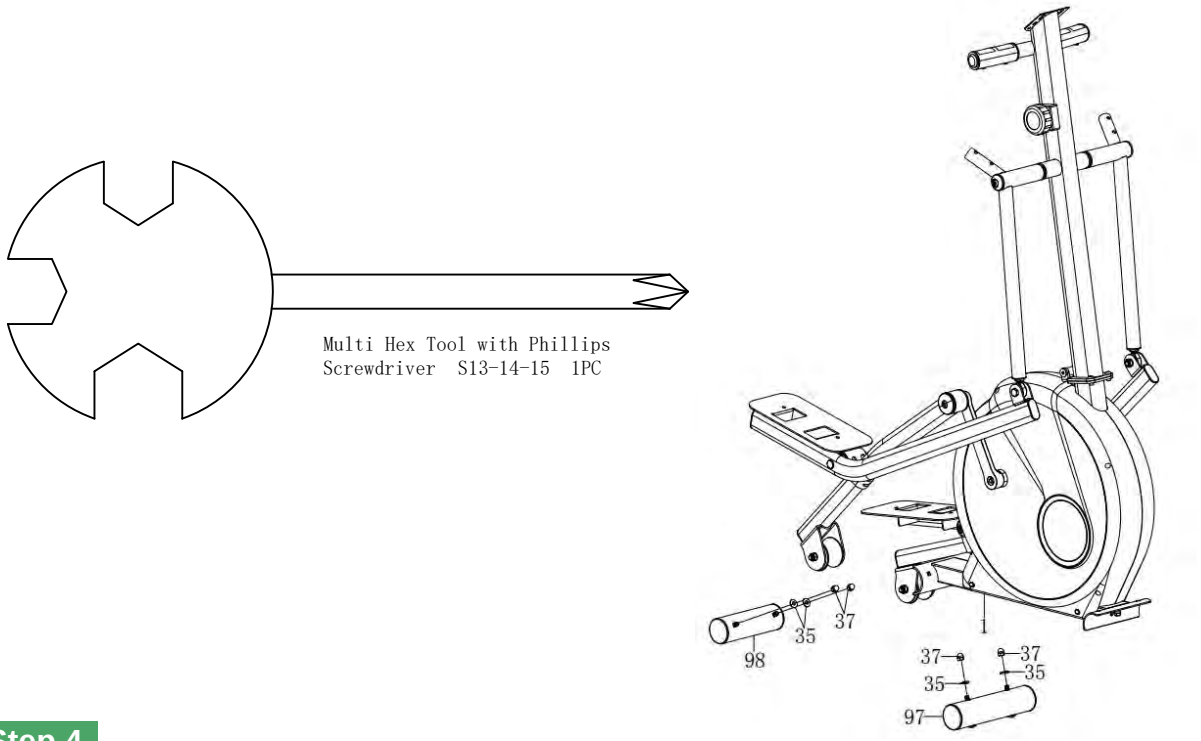

Step 4

Attach Front Stabilizer (2) onto Main Frame (1) with two M8x75 Carriage Bolts (34), two Φ8xΦ 20x1.5 Arc Washers (35), and two M8 Cap Nuts (37). Tighten and secure with Screwdriver provided.

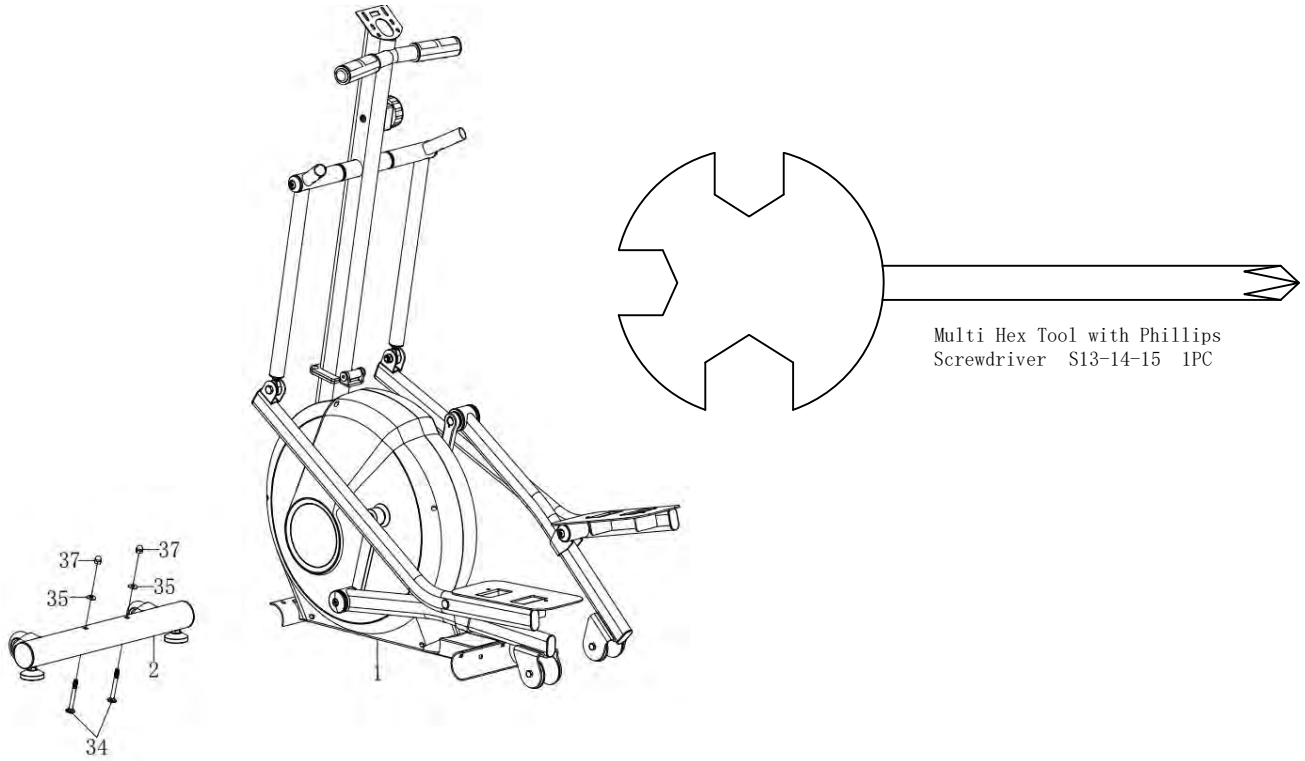

Step 5

Then Attach Rear Stabilizer（3）onto Main Frame (1) with two M8x80 Carriage Bolts (99), two Φ 8xΦ20x1.5 Arc Washers (35), and two M8 Cap Nuts (37).
Tighten and secure with Screwdriver provided.

Note: When installing Rear Stabilizer (3), the Glide Wheel (48) should be stuck in the middle of Rear Stabilizer.

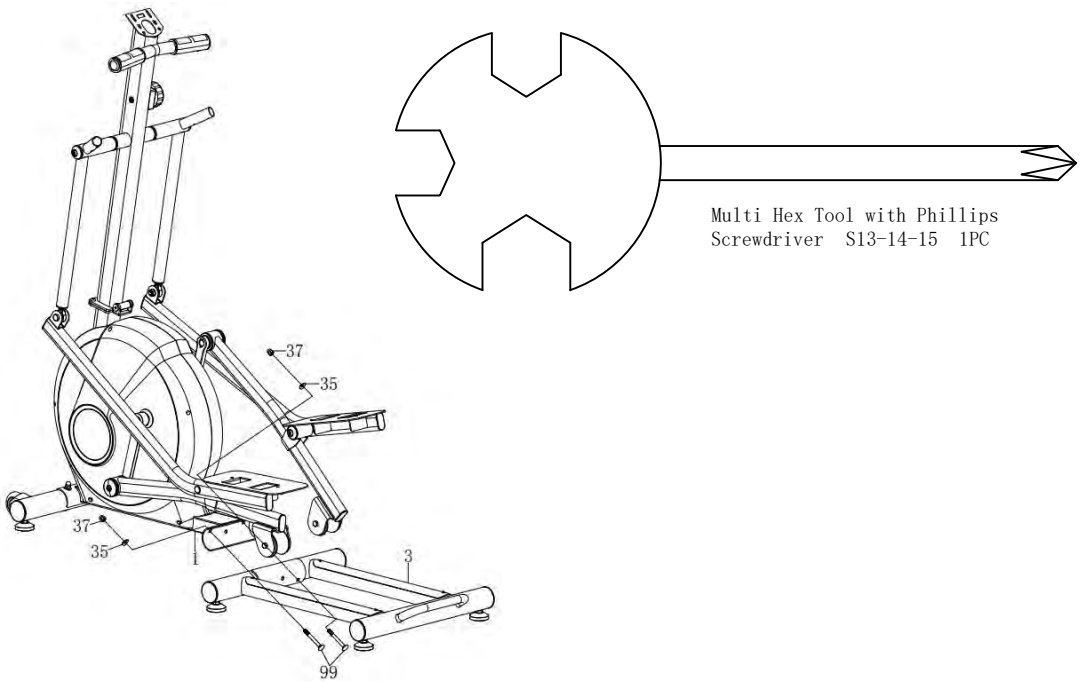

Step 6

Attach the Left pedal (47L) onto the left Pedal Arm (8) with two Hexagon bolt with Inner Hexagon Screw (95) and tighten them with provided Allen Wrench S6.
Attach the Right pedal onto the Right Pedal Arm (9) in the same way.(As below drawing shows).

Noted: the Inner Hexagon Screw (95) taken from HARDWARE BAG.

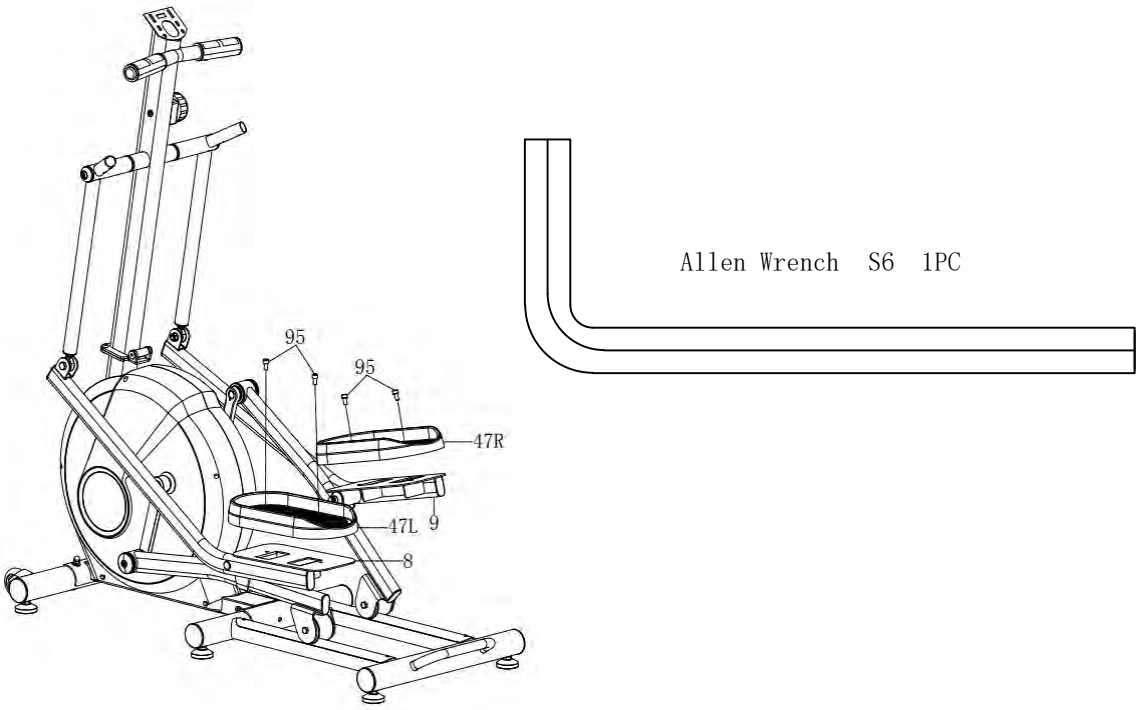

Step 7

Insert the Left & Right Handrail Arm (59L)(59R) into the tube of Left & Right Handrails (5)(6) with four M6*16 Pan head hexagonal bolt (63), And fourΦ8*29*M6 Pan head hexagonal bolt (62). Tighten and secure with Allen Wrench S6 and Allen Wrench S5 provided.

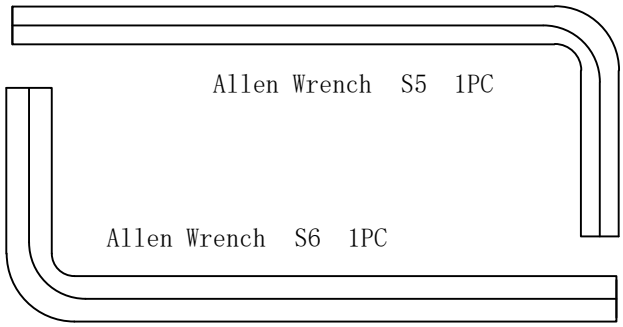

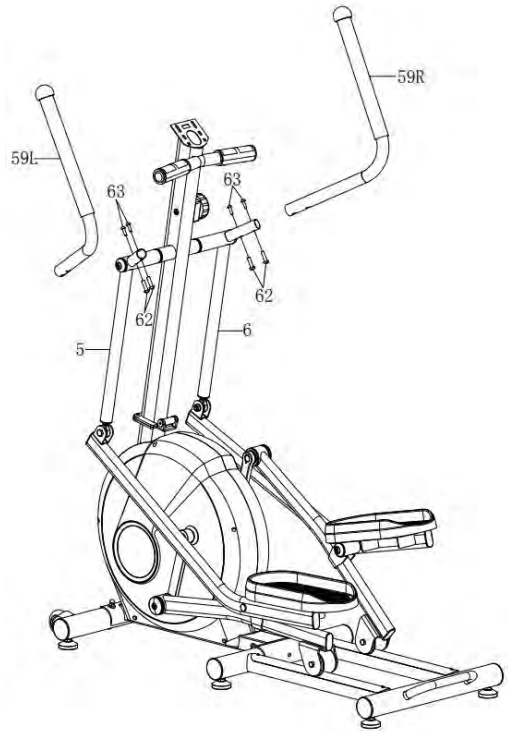

Step 8

Remove pre-assembled four M5x10 Cross Pan Head Bolts (11) from Console (10).
Connect Extension Sensor Wire (12) and Hand Pulse Sensor with Wires (94) to the wires that came from Console (11) . Tuck wires into Console Post (4). Attach Console (10) onto the top of Console Post (4) with four M5x10 Cross Pan Head Bolts (11) that were removed. Tighten and secure with Screwdriver Provided.
Fasten the Left decorative cover and Right decorative cover (57),(58) together onto the Console Post (4) as indicated in the below drawing. Then push the them(57),(58) together down on to the Console Post (4).

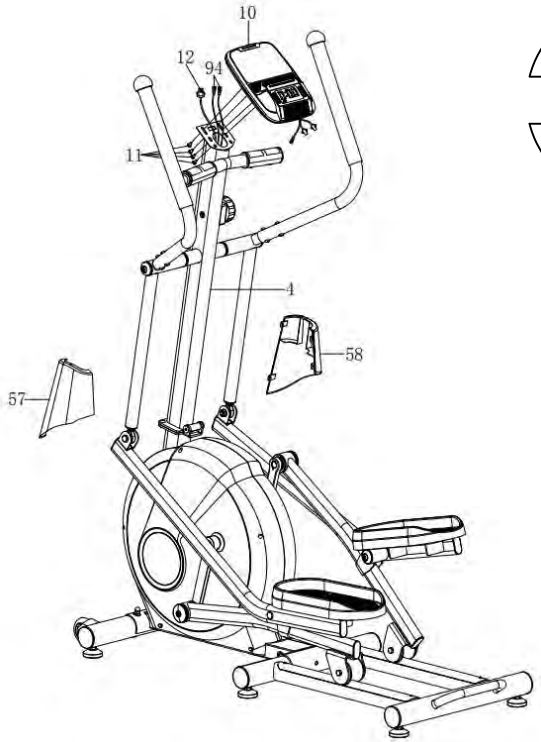

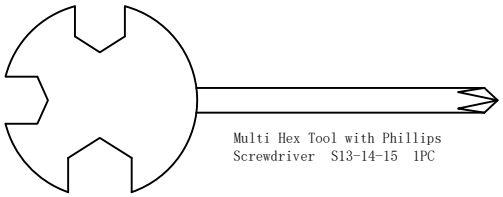

6. WARM UPAND COOL DOWN ROUTINE

A successful exercise program consists of a warm-up, aerobic exercise, and a cool-down. Do the entire program at least two and preferably three times a week, resting for a day between workouts. After several months, you can increase your workouts to four or five times per week. Warming up is an important part of your workout, and should begin every session. It prepares your body for more strenuous exercise by heating up and stretching out your muscles, increasing your circulation and pulse rate, and delivering more oxygen to your muscles. At the end of your work out, repeat these exercises to reduce sore muscle problems. We suggest the following warm-up and cool-down exercises:

Inner Thigh Stretch

Sit with the soles of your feet together with your knees pointing outward. Pull your feet as close into your groin as possible. Gently push your knees towards the floor. Hold for 15 counts.

Hamstring Stretch

Sit with the soles of your feet together with your knees pointing outward. Pull your feet as close into your groin as possible. Gently push your knees towards the floor. Hold for 15 counts.

Head Roll

Rotate your head to the right for one count, feeling the stretch up the left side of your neck. Next, rotate your head back for one count, stretching your chin to the ceiling and letting your mouth open. Rotate your head to the left for one count, and finally, drop your head to your chest for one count.

Shoulder Lift

Sit with the soles of your feet together with your knees pointing outward. Pull your feet as close into your groin as possible. Gently push your knees towards the floor. Hold for 15 counts.

Calf-Achilles Stretch

Lean against a wall with your left leg in front of the right and your arms forward. Keep your right leg straight and the left foot on the floor; then bend the left leg and lean forward by moving your hips toward the wall. Hold, then repeat on the other side for 15 counts.

Toe Touch

Slowly bend forward from your waist, letting your back and shoulders relax as you stretch toward your toes. Reach down as far as you can and hold for 15 counts.

Side Stretch

Open your arms to the side and continue lifting them until they are over your head. Reach your right arm as far upward toward the ceiling as you can for one count. Feel the stretch up your right side. Repeat this action with your left arm.

7. MONITOR MANUAL

1. SPECIFICATIONS

SCAN
TIME ---------- (0:00-99:59)minute
DISTANCE ---------- (0.00-999.9)mile
CALORIES ---------- (0.0-999.9) kcal
SPEED ---------- (0.0-99.9)mph
ODO ---------- (0.00-999.9)mile
PULSE ---------- (40-240)

2. KEY FUNCTION

MODE — Push down for selecting functions.If the long time holds down MODE button down for resetting time、distance and calories.

SET — To set the values of time、distance、calories and pulse when not in scan mode.

RESET — Push down for resetting time、distance、calories and pulse.

3. OPERATION PROCEDURES

1. AUTO ON/OFF

I The monitor will automatically shut off if there is no signal received after 4 minutes.
II The monitor will be auto-powered on when starting to exercise push button signal in.

2. FUNCTIONS

SCAN: Press “MODE” button until“SCAN”appears,monitor will rotate through all the 6 functions: Time\speed\distance\ODO\calorie \ pulse, Each display will be hold 4 seconds.
TIME: Count the total time from exercise start to end.
DISTANCE: Count the distance from exercise start to end.
CALORIES: Count the total calories from exercise start to end.
SPEED: Display current speed.
PULSE: Display current pulse.
ODO: The total distance which this function is refers to from battery capacity period runs.

4. BATTERY

If the display is faint or shows no figures ,please replace the batteries.

NOTE: when the APP is connected, the monitor screen will be auto-off, after stopping connecting APP, click the MODE key to wake up the screen.

8. INSTRUCTIONS

1. FUNCTIONS OF THE BLUETOOTH

1.1 The wireless transmitter in the device only records the user's data and sends it to the mobile APP when it is connected to the mobile phone. Before starting the sports equipment, please connect the application to the equipment to ensure that the data recorded in the mobile application is true and valid.

1.2 When the transmitter does not receive any signal for 4 minutes, it will enter sleep mode. In sleep mode, the mobile phone will not be able to search for the transmitter. At this time, you need to use the device to wake up the Bluetooth transmitter.

2. APP OPERATING INSTRUCTIONS

2.1 Description of KINOMAP connection

Tips: Since the KINAMAP official software connection steps will be updated in real-time, this connection process is only for reference; when the APP is connected, the equipped monitor screen will be auto-off, after stopping connecting APP, click the MODE key to wake up the screen.

2.1.1. Search "KINOMAP" in mobile app store to download app.

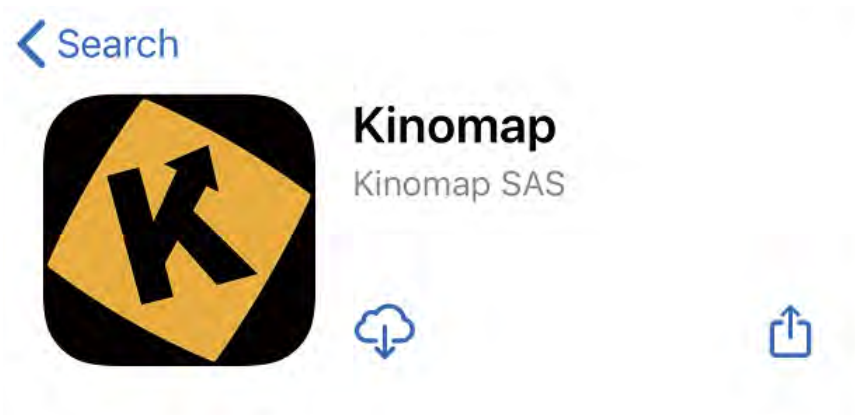

2.1.2. After the download is completed, open the app and register the personal information. Turn on the Bluetooth of the mobile phone to ensure that the transmitter is powered on and in the wake-up state.

2.1.3. Add sports equipment as follows:

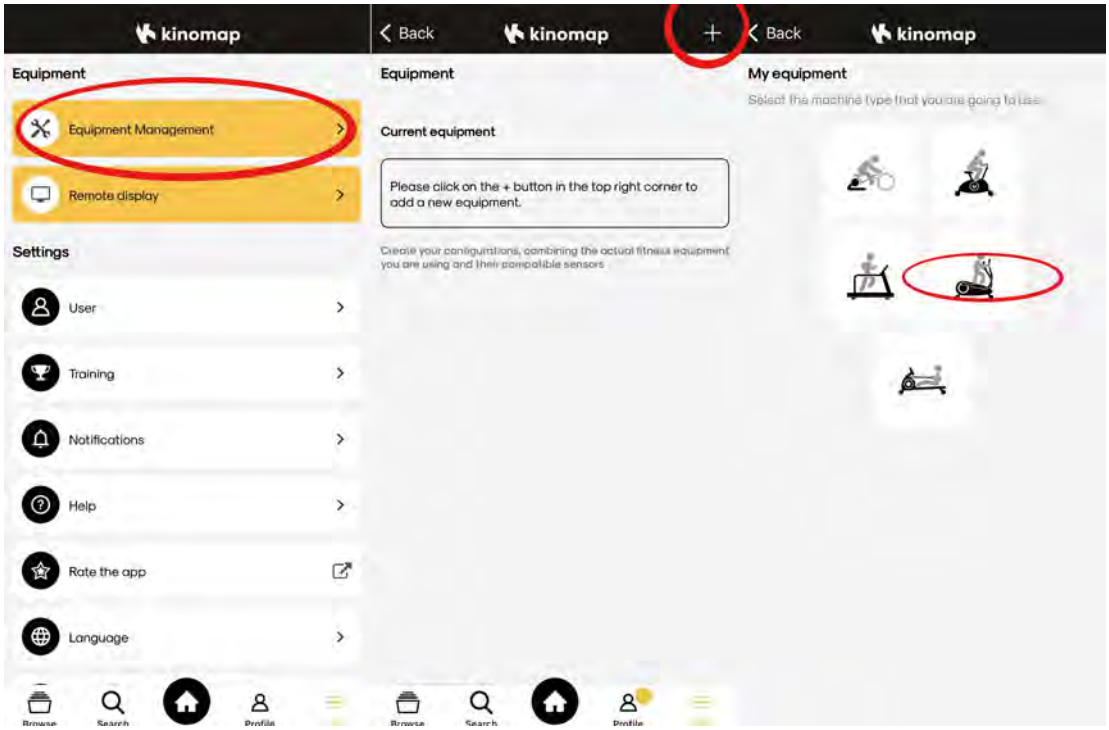

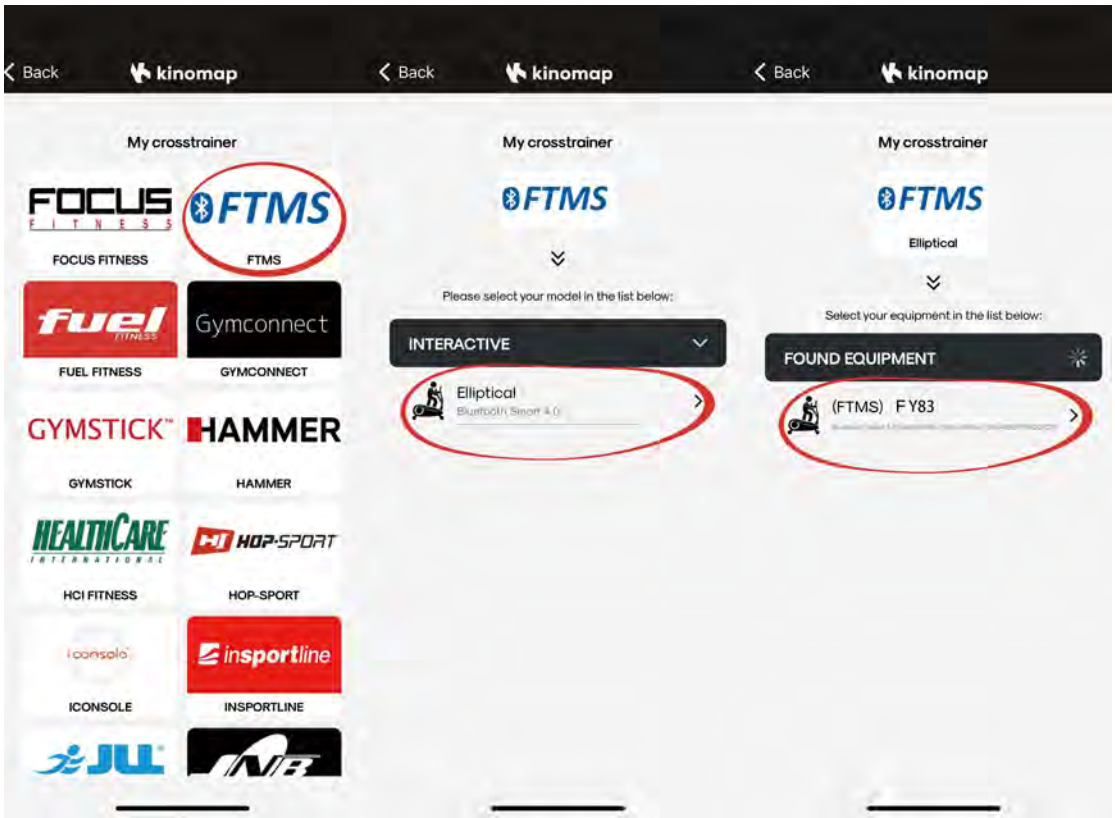

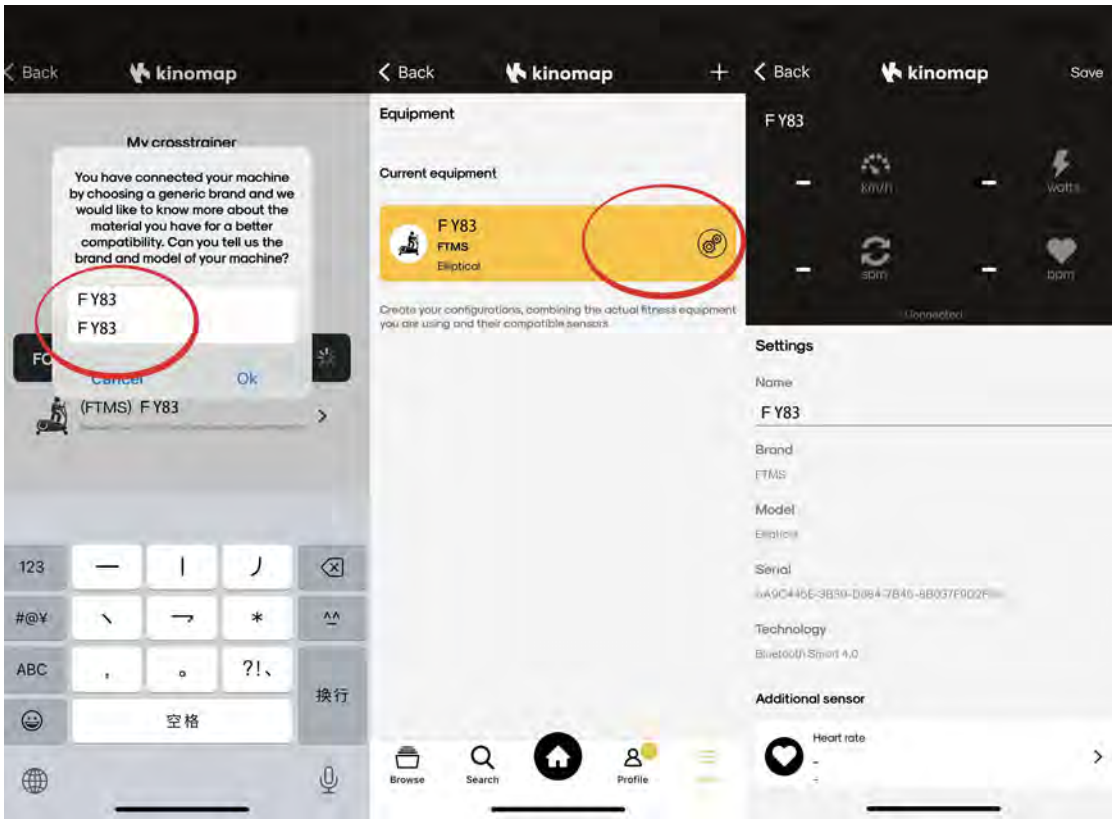

2.1.4. Add equipment to complete, start your exercise!

2.2 Description of Zwift connection

Tips: Since the Zwift official software connection steps will be updated in real time, this connection process is only for reference; when the APP is connected, the equipped monitor screen will be auto-off, after stopping connecting APP, click the MODE key to wake up the screen.

2.1.5. Search "Zwift" in mobile app store to download app.

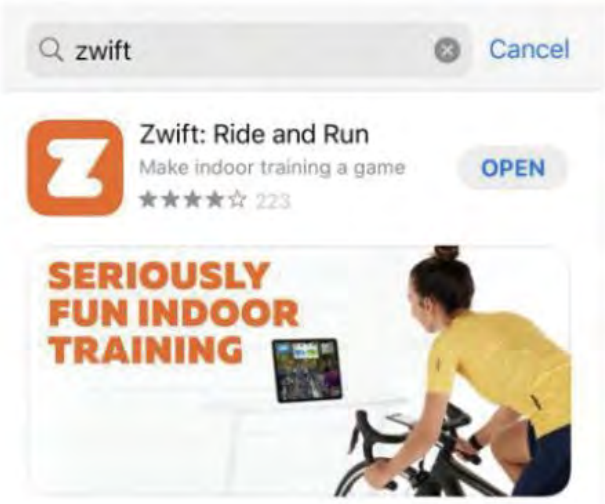

2.1.6. After the download is completed, open the app and register the personal information. Turn on the Bluetooth of the mobile phone to ensure that the transmitter is powered on and in the wake-up state.

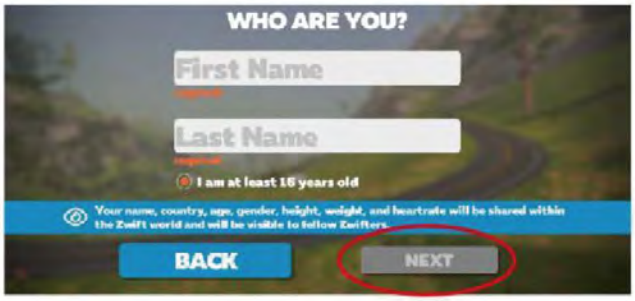

2.1.7. Connect the sports equipment as follows:

2.1.8. Connect equipment to complete, start your exercise!

2.3 Description of FITSHOW connection

Open **FITSHOW APP**. Before creating an account, be sure to read the Terms of Use and Privacy Policy.

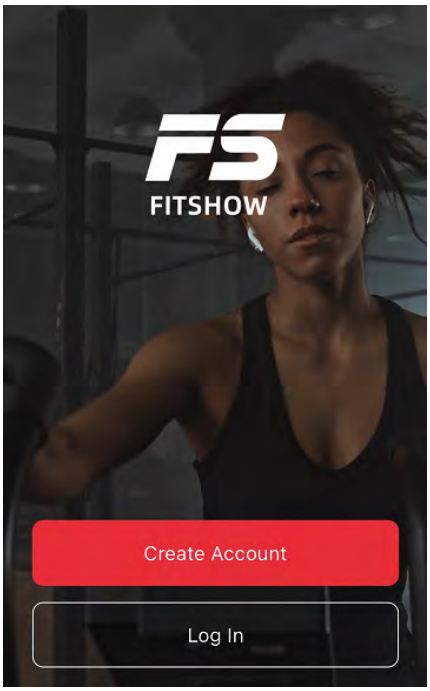

Create an account:
a. Select Create Account/Sign Up/Register if you haven't already had an account. Click LOGIN if you are an existing user of those apps.
b. Enter phone number/email address and password you'd like to use.
c. Once you have logged into your account, complete your personal details. This information personalizes your experience and improves the accuracy of your calorie burn and distance data. You can adjust your privacy settings under Settings in the app.

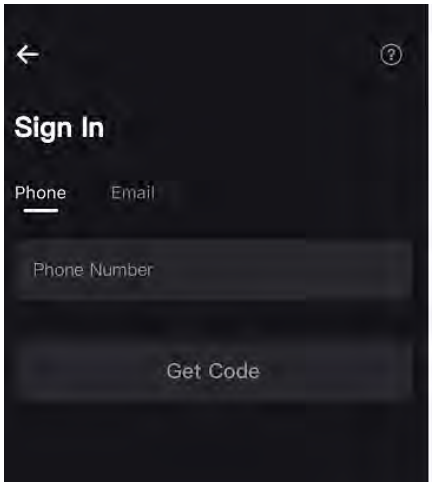

After login your account, you can connect to the Elliptical Machine.
Step 1:Select device type:Elliptical Trainer
Step 2: Click Quick Start and connect the device: FY83

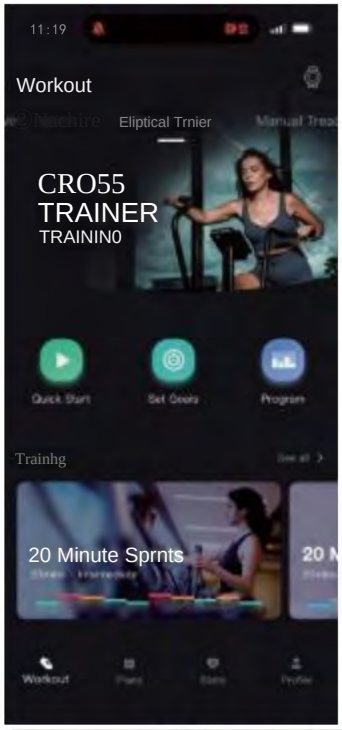

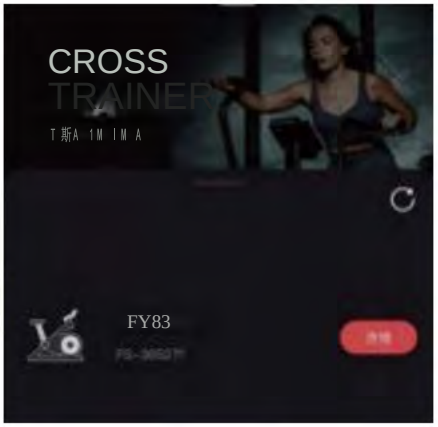

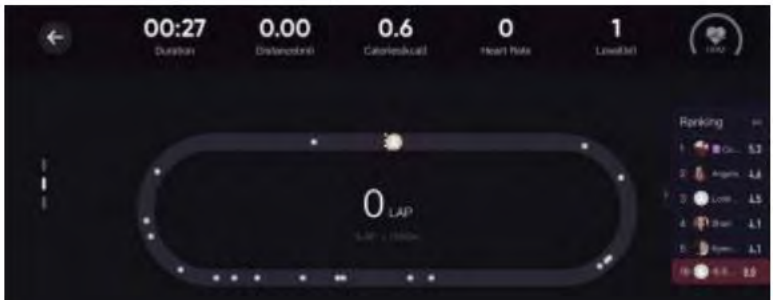

FCC STATEMENT

Changes or modifications not expressly approved by the party responsible for compliance could void the user's authority to operate the equipment.

This equipment has been tested and found to comply with the limits for a Class B digital device, pursuant to Part 15 of the FCC Rules. These limits are designed to provide reasonable protection against harmful interference in a residential installation. This equipment generates uses and can radiate radio frequency energy and, if not installed and used in accordance with the instructions, may cause harmful interference to radio communications. However, there is no guarantee that interference will not occur in a particular installation. If this equipment does cause harmful interference to radio or television reception, which can be determined by turning the equipment off and on, the user is encouraged to try to correct the interference by one or more of the following measures:

- Reorient or relocate the receiving antenna.
- Increase the separation between the equipment and receiver.
- Connect the equipment into an outlet on a circuit different from that to which the receiver is connected.
- Consult the dealer or an experienced radio/TV technician for help.

This device complies with Part 15 of the FCC Rules. Operation is subject to the following two conditions:
(1)This device may not cause harmful interference, and
(2)This device must accept any interference received, including interference that may cause undesired operation.

FCC Radiation Exposure Statement
The device has been evaluated to meet general RF exposure requirement. The device can be used in portable exposure condition without restriction.

MADE IN CHINA